EATON | Holec

Magnefix^{plus}

12 kV switchgear with remote control and metering

Equipped for now and the future

Magnefix^{plus} is a very compact solution for remote switching, metering and protection of Medium Voltage connections in the distribution network.

It is a welcome addition to the existing robust, safe and reliable epoxy resin insulated Magnefix switchgear.

Magnefix^{plus} is equipped in an optimal way for application in intelligent distribution networks. Reduced down-times and effective use can be realised based on actual load information combined with remote controllled switching.

Magnefix^{plus} complies fully with the most recent IEC regulation 62271-201.

Tariff metering

The tariff metering can be connected to current transformers mounted at the cable side of the switch panels. The power transformer in the transformer station can supply the voltage connection for metering, alternative a separate set of voltage transformers can be connected to a normal Magnefix switch panel.

Short circuit indication

For the short circuit indication the switch caps can be provided with light sensors type FCI make Horstmann, connected to a GSM unit for communication.

Remote control

The circuit-breaker is provided with vacuum interrupters with an electromagnetic drive mechanism. It can be switched from a remote location by using an auxiliary voltage.

- **Very compact**
- **Tariff metering according to Dutch regulator codes**
- **Very low environmental impact**
- **Improved cable connections**
- **Short-circuit indication based on light sensors with GSM communication**
- **Complete remote controllable circuit-breaker**
- **Combination with existing Magnefix switchgear**
- **Fully certified**

Magnefix – Proven technology from Eaton Holec

Technical data

Rated values	
Voltage	12 kV
Impulse withstand voltage	75/85 kV
Power frequency withstand voltage	28/32 kV
Frequency	50-60 Hz
Cable connections	XLPE

Busbar system	
Normal current	400 A
Short-time withstand current 1 s	14.4 kA
Peak withstand current	31 kA

Circuit-breaker	
Normal current	400 A
Breaking current	14.4 kA
Short-circuit making current	31 kA
Short-time withstand current 1 s	14.4 kA
DC component	20 %
Auxiliary supply voltage mechanism	36-72 V DC / 36-60 V AC or 100-353 V DC / 100-240 V AC
Protection	WIC1 relay

Transformer station with Magnefix^{plus}.

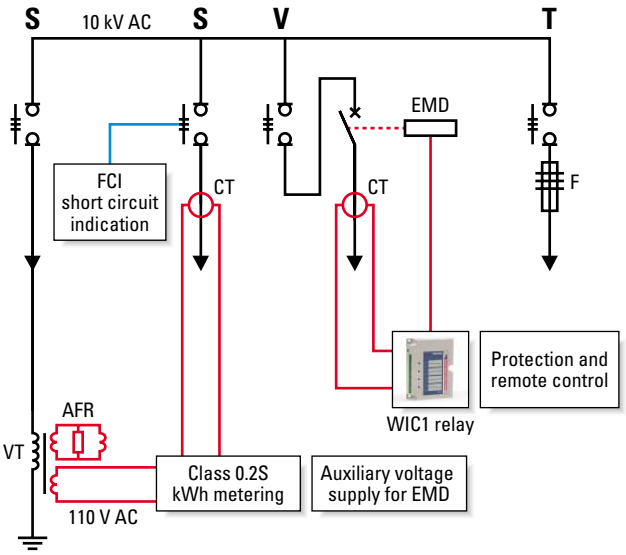

VT	Voltage transformer for metering
CT	Current transformer for metering or protection
AFR	Anti Ferro- Resonance Filter
FCI	Horstmann FCI short circuit indicator via GSM
EMD	Electromagnetic drive mechanism including controller and capacitor
F	Primary fuse
——	10 kV
——	Secondary wiring
——	Glasfiber wiring (FCI)

Example of an application with remote control and tariff metering.

Due to continuous research and development policy Eaton Holec reserves the right to make changes in design and specifications of the products without prior written notice.

EATON | Holec

Eaton Electric B.V.
P.O. Box 23
7550 AA Hengelo
The Netherlands

Tel. : +31 74 246 40 10
Fax : +31 74 246 40 25
holec-info@eaton.com
www.eatonelectrical.nl

© 2008 Eaton Electric B.V.
All rights reserved.

Printed in The Netherlands.
Form No. 603.6351A/1/SG
June 2008