EATON | Bill

Magnum
IEC Low Voltage Air Circuit Breakers

Product Focus

- Up to 690 V_{ac}
- 42 kA to 100 kA I_{cu}
- 800 to 6300 A
- IEC 60947-2

- **Proven Performance**
- **Expanded Capabilities**
- **High Withstand Ratings**

A global source for innovative electrical power distribution solutions

Proven performance … time and again

For over 70 years, Eaton has designed, engineered and manufactured low voltage circuit breakers and trip units for the global market. Our revolutionary product developments and solutions continue to set the standard for quality, reliability, and extended operating life. We are an industry leader in air circuit breaker technology innovations such as the first solid-state trip unit, the first microprocessor-based trip unit, zone selective interlocking, and the DE-ION® arc extinguisher design, providing superior arc quenching characteristics.

Expanded capabilities … in less space

The advanced arc running system enables Magnum to control the arc direction, while also providing for higher interrupting capacity in a smaller space.

Increased ratings in less space provide the flexibility to design more robust electrical distribution systems capable of handling larger available fault currents, and providing better coordination with downstream devices. Magnum breakers are designed for use in low voltage assemblies: switchgear, switchboards, motor control centres, and transfer switch equipment.

Safety first

Much consideration was given to operator safety and system security.

- Improved C-loop current path design provides dramatic enhancements in both safety and efficiency.
- Higher current ratings increase the blow-on forces on the contact surfaces, allowing the proper downstream protective device to open, isolating the fault and increasing uptime.
- Positive On is indicated on the breaker faceplate. This unique interlocking feature prevents the levering door from being opened if the contacts are welded, protecting personnel from exposure to live primary contacts. Making current release prevents the breaker from closing in on a fault with peak current exceeding 25 times the RMS nominal current.
- Keyed sensor plugs ensure error-free installation of the sensor in the field.
- Deadfront faceplate isolates the operator from the primary voltage when the breaker is energized.
- Anti-pump prevents any attempts to reclose the breaker on a short circuit fault if the close signal (mechanical or electrical) is maintained.

High withstand ratings … in a compact size

Eaton's innovations meet the needs of today's modern air circuit breakers:

- The capability to design more flexible systems that can withstand larger available fault currents.
- Better coordination with downstream devices.
- Reduced size of the switchgear assembly.
- Integrally designed breaker levering mechanism and cassette for drawout breaker with clear indication of connect, test, and disconnect positions.

Meeting the challenge

Magnum breakers are engineered specifically for use in low voltage assemblies applied at nominal voltages of 380, 415, 440, 500 and 690 V_{ac}. Ten continuous ratings – 800 A through 6300 A – are covered with three frame sizes. Drawout and fixed mounting units are available in 3- or 4-pole designs.
Controls and indicators are conveniently grouped on the breaker's front escutcheon where they can be easily viewed and accessed through a cutout door.

High withstand ratings

Magnum provides high interruption and withstand ratings in a small physical size.

Through-the-door design

All controls, indicators, and the trip unit are visible and can be safely accessed without opening the compartment door.

Common height and depth

All three Magnum frame sizes have the same identical height and depth to facilitate standardised designs in low voltage assemblies.

Complete trip unit family

A full range of Digitrip® programmable and electronic trip units has been expanded to offer customers a choice of protection, information, and communication capabilities to meet specific requirements.

1. Integral arc hood.
2. Front mounted secondary contacts.
3. Trip flag (optional).
4. Three accessory windows.
5. Spring status indicator (charged or discharged).
6. Contact status indicator (open or closed).
7. Digitrip RMS trip unit.
8. "Push On" to close breaker button.
9. "Push Off" to open breaker button.
10. Manual charging handle.
11. Drawout cassette.
12. Optional operations counter.
13. Optional "Off" key lock.
14. Integral padlockable levering device.
15. Colour-coded breaker position indicators.

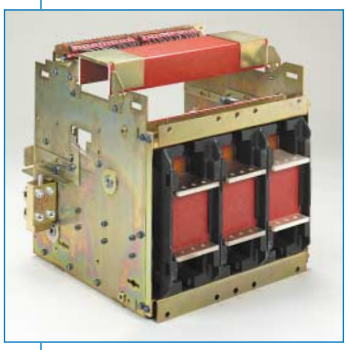

Rear view of integrally-designed cassette showing generous spacing for customer bus connections.

The independently operated and lockable shutter design provides a safe environment when the breaker is removed from the cassette.

A look inside the Magnum

Designed for easy access, inspection, and minimal maintenance

The stored energy mechanism, control devices, accessories, and secondary contacts are easily accessible by removing the front cover, held in place by four captive screws. For safety, this can only be done when the breaker is in the disconnect position or removed from the cell.

The current sensor viewing window on the rear of the breaker allows for easy identification of the current sensor mounted inside.

A contact wear indicator eliminates the need for elaborate testing to determine if the contact assembly needs replacing.

Two-step stored energy mechanism for manually and electrically operated breakers

The potential energy is stored in the mechanism to close the breaker in five cycles or less. Sufficient energy to open the breaker remains available following the closing operation.

After closing, the charging spring can be recharged to provide potential energy for reclosing following a fault, providing high continuity of service. This feature allows for the following sequence:

Charge – Close – Recharge – Open – Close – Open.

On manually operated breakers, closing springs are charged by hand. For electrically operated breakers, springs are charged by an electric motor but can be manually charged if no power is available.

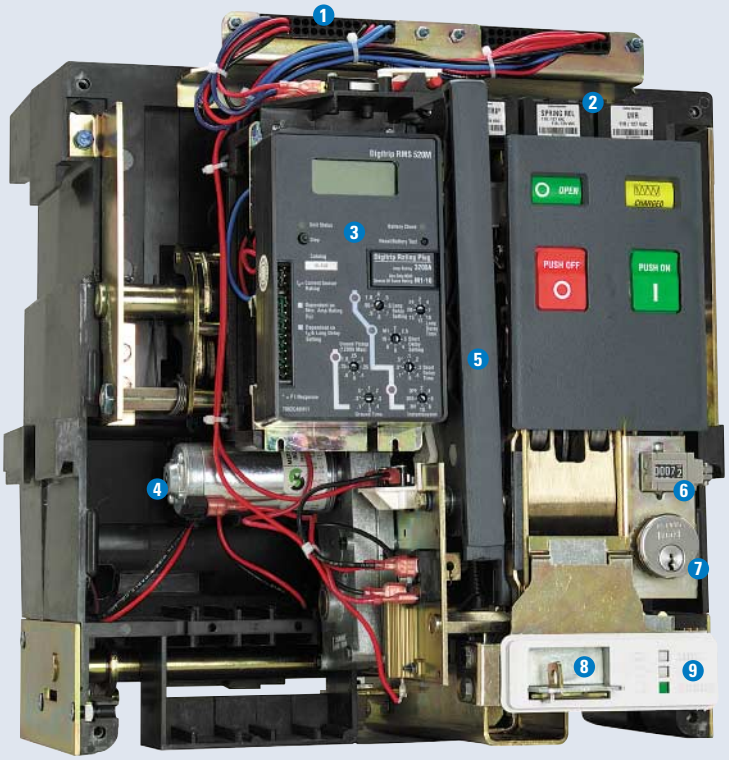

1. Secondary wiring points.
2. Field installable accessories (three maximum).
3. Digitrip RMS trip unit.
4. Optional electric charging motor.
5. Manual charging handle.
6. Optional operations counter.
7. Optional "Off" key lock.
8. Padlockable levering device.
9. Breaker position indicator.
10. Secondary contacts.
11. Arc chute covers.
12. Primary finger cluster disconnects.
13. Current sensor window.
14. Rigid frame housing.

This rear view of a Magnum drawout breaker shows the designed-in safety feature of locating the primary disconnects and secondary contacts on the removable breaker element for easy and safe inspection.

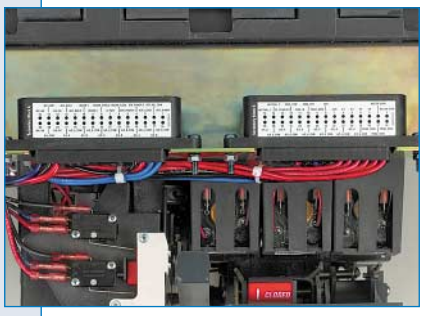

Positioning of the secondary contact subassembly is dedicated for installation, maintenance, and testing. Top view shown with breaker cover removed, bottom of photo is front of breaker.

The right choice for low voltage assemblies … anywhere in the world

Three structure widths offer greater capacity in less space

The Magnum has been engineered to fit into three space-saving structure widths for 3-pole and three more for 4-pole units. The Magnum breaker provides opportunities for more circuit breakers in less space. Reduced space means greater cost savings regarding assembly time, number of assembly structures, and final installation area.

Through-the-door design ensures user-friendly operation, visual indication, and optimum safety

Through-the-door design provides clear visual and physical access to the trip unit and ALL breaker controls and indicators … including open and close buttons, the open/close indicating flag, the charging handle, breaker interlock, and the spring charge/discharge flag. Even breaker levering is accomplished with the breaker compartment door closed.

For safety and security, the breaker compartment allows three breaker positions with the door closed: connect, test, and disconnect.

Extension rails can be padlocked to prevent a breaker from being inserted into a cell, a lock-out requirement when maintenance is being performed. This helps assure personnel safety and guarantees that no one can install a breaker and energise a circuit on which a person may be working.

Through-the-window accessories

Shunt trip - Provides remote controlled circuit breaker opening when energised by a voltage input.

Spring release - Remotely closes the breaker when its coil is energised by a voltage input.

UnderVoltage Release (UVR) - Trips the breaker remotely when an existing voltage signal is lost or drops below an established threshold.

Internal Accessories

Auxiliary switch - Provides the capability to remotely indicate if the breaker is open or closed. Up to six N/O and six N/C auxiliary contacts are available for customer use.

Overcurrent trip switch (bell alarm) - A set of N/O and N/C contacts that indicate when a breaker trips.

Electrical operator - An electric motor, internally mounted in the circuit breaker, that charges the closing springs automatically, facilitating remote or local closing.

In the withdrawn position, the breaker can be removed from the cell on integral extension rails.

Finger-proof (IP20) secondary points with easy access for customer wiring.

All breakers can be padlocked to secure the breaker in all three positions. An optional key interlock (not shown) can also secure the breaker in each position.

The drawout breaker can be conveniently racked in or out, stopping at the various positions with the door closed.

The breaker spring charging handle is designed with sufficient space for operation even with a gloved hand.

Safety is enhanced by the through-the-door design that provides for three breaker positions with the door closed: connect, test, and disconnect.

Connect

Test

Disconnect

Convenient secondary contact placement facilitates wiring and maintenance

Secondary wiring points are located in the top front portion of each cell. A separate door can be used to cover the contacts so an operator can safely access them without opening the breaker compartment door. Customer contact points are dedicated to the customer's interface, totally free and isolated from factory connections.

The secondary terminals have standard finger-proof hinged covers, providing safety by protecting against accidental contact with live secondary contacts.

Covers are hinged for making connections and include a small access hole for circuit testing using a probe. Each secondary contact point is dedicated to a specific function, allowing standardised wiring diagrams and true electrical interchangeability of common size breakers. Standard wiring points help improve quality while reducing maintenance and inspection time for end customers.

A common family of accessories for all frame sizes

We designed Magnum accessories to fit all frame sizes, thus reducing inventory parts and the possible confusion that can exist when various accessory sizes are required for individual breaker frames.

Magnum through-the-window accessories are installed in the right front of the breaker. The unique windows in the breaker cover enable accessories to be quickly identified by name and rating. Additional internal accessories include an auxiliary switch, over-current trip switch (alarm), and electrical motor operator.

Accessories are plug-in units that snap in place, providing for easy mounting and wiring to save both installation time and cost. This feature facilitates accessory changes by the installer or user personnel, eliminating the need for manufacturer modification or outside service companies.

Modular accessories are keyed for fast error-free mounting in the field. For example, the spring release unit can only be mounted in the centre cavity.

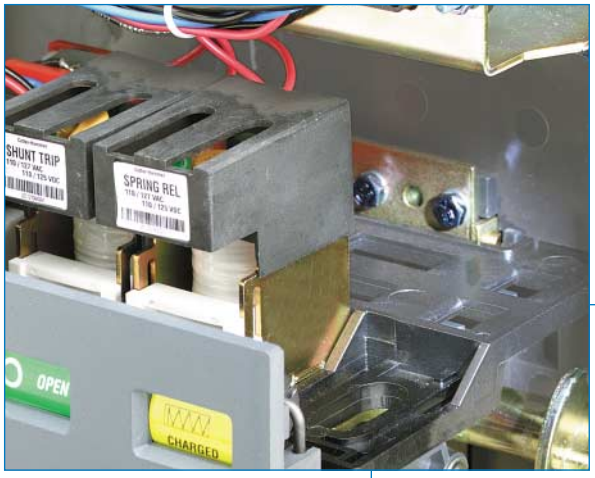

Magnum modular design allows customers to mount accessories in the field.

Viewable through-the-window electrical accessories are identically sized, yet keyed for error-free mounting.

The auxiliary switch is an internal accessory that provides remote electrical indication of the breaker status.

An electric motor automatically charges the closing springs. In absence of control power, the springs can be manually charged.

The trip unit family

Protection and information … the digitrip family provides choices like no other

Ever since introducing the first microprocessor-based trip unit, Eaton has advanced the technology into a more complete family of Digitrip RMS Electronic and Programmable Trip Units designed and engineered exclusively for Magnum breakers. Magnum can also be supplied as a non-automatic switch.

Electronic trip units

- Digitrip RMS 520 LI provides long time and instantaneous protection only.
- Digitrip RMS 520 LSI / 520i LSIG enables the user as many as nine phases and earth current protection settings for maximum flexibility in trip-curve shaping and multi-unit coordination, and adds earth fault current protection settings.
- Digitrip RMS 520M adds phase, neutral, and Earth fault current metering … with a four-character LCD display window.
- Digitrip RMS 520MC has the same features as the 520Mi, but also includes communications.

Note: 520i, 520Mi, 520MCi, and 1150i versions are used when earth fault protection is specified (LSIG).

Programmable trip units

Digitrip RMS 1150 provides programmability for more sophisticated distribution systems including:

- Increased protection and coordination capabilities.
- Systems monitoring information including power factor, voltage current, harmonic distortion, values, and waveform capture with a three-line (8 characters per line) LED display.
- Two programmable contacts for customer use.
- Time stamping of trip events for improved troubleshooting and diagnostics.
- Accuracy of 1% on metered values and 2% on energy and power.
- Systems diagnostic information.
- INCOM and PowerNet communications.
- Allows for custom curve shaping or selectable IEC curves.

Digitrip 520/520M
Long and short delay curves

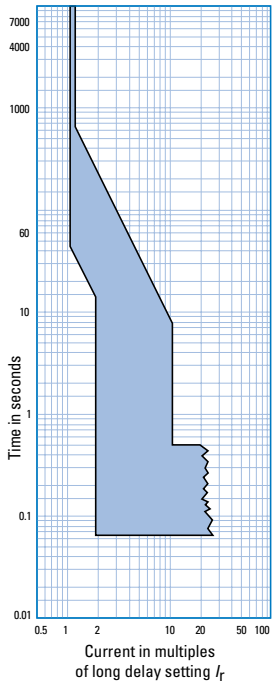

Digitrip 520i/520Mi
Ground curve

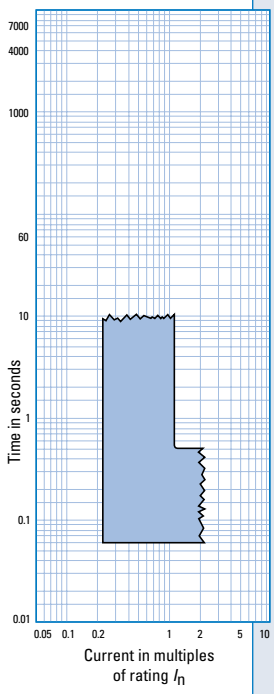

Magnum Trip Unit Test Kit MTK1000

The new and improved Magnum Trip Unit Test Kit MTK1000 is designed to be a user friendly upgrade from the previous Magnum trip unit test kit, offering improvements in ease of operation, portability, durability, safety and measurement accuracy.

Trip unit summary table

Magnum Digitrip trip units

The next generation of proven Digitrip RMS Trip Units is available exclusively on Magnum Breakers. These true rms sensing trip units provide accurate coordination with the conductors and equipment the breaker is designed to protect.

Trip unit type		Digitrip 520 LI	Digitrip 520 LSI Digitrip 520i LSIG [3]	Digitrip 520M LSI Digitrip 520Mi LSIG [3]	Digitrip 520MC LSI Digitrip 520MCi LSIG [3]	Digitrip 1150i LSI Digitrip 1150i LSIG [3]
Ampere range		200 A - 3200 A	200 A - 6300 A	200 A - 6300 A	200 A - 6300 A	200 A - 6300 A
Interrupting rating at 690 V		40 through 100 kA	40 through 100 kA	40 through 100 kA	40 through 100 kA	40 through 100 kA
Rms sensing		Yes	Yes	Yes	Yes	Yes
Protection and coordination						
Protection	Ordering options	LI	LSI, LSIG	LSI, LSIG, LSIA	LSI, LSIG, LSIA	LSI, LSIG, LSIA
	Fixed rate plug (I_n)	Yes	Yes	Yes	Yes	Yes
	Overtemperature trip	Yes	Yes	Yes	Yes	Yes
Long delay protection (L)	Long delay pickup	0.4 - 1.0 x (I_n)	0.4 - 1.0 x (I_n)	0.4 - 1.0 x (I_n)	0.4 - 1.0 x (I_n)	0.4 - 1.0 x (I_n)
	Long delay time I^2t at 6 x I_r	2 - 24 seconds	2 - 24 seconds	2 - 24 seconds	2 - 24 seconds	2 - 24 seconds
	Long delay time I^4t	No	No	No	No	1 - 5 seconds
	Long delay thermal memory	Yes	Yes	Yes	Yes	Yes
	High load alarm	No	No	No	No	0.5 - 1.0 x (I_r)
Short delay protection (S)	Short delay pickup	No	200 - 1000% x (I_r) and M1	200 - 1000% x (I_r) and M1	200 - 1000% x (I_r) and M1	200 - 1000% x (I_r) and M1
	Short delay time I^2t at 8 x I_r	No	100 - 500 ms	100 - 500 ms	100 - 500 ms	100 - 500 ms
	Short delay time flat	No	100 - 500 ms	100 - 500 ms	100 - 500 ms	100 - 500 ms
	Short delay time ZSI	No	Yes	Yes	Yes	Yes
Instantaneous protection (I)	Instantaneous pickup	200 - 1000% x (I_n) and M1	200 - 1000% x (I_n) and M1	200 - 1000% x (I_n) and M1	200 - 1000% x (I_n) and M1	200 - 1000% x (I_n) and M1
	Making current release	Yes	Yes	Yes	Yes	Yes
	Off position	No	Yes	Yes	Yes	Yes
Earth fault protection (G)	Earth fault alarm	No	No	Yes	Yes	Yes
	Earth fault pickup	No	25 - 100% x (I_n)	25 - 100% x (I_n)	25 - 100% x (I_n)	24 - 100% x (I_n)
	Earth fault delay I^2t at .625 x I_n	No	100 - 500 ms	100 - 500 ms	100 - 500 ms	100 - 500 ms
	Earth fault delay flat	No	100 - 500 ms	100 - 500 ms	100 - 500 ms	100 - 500 ms
	Earth fault ZSI	No	Yes	Yes	Yes	Yes
	Earth fault thermal memory	No	Yes	Yes	Yes	Yes
Neutral protection (N)		Yes	Model LSI only	Model LSI only	Model LSI only	Model LSI only
System diagnostics						
Cause of trip LEDs		Yes	Yes	Yes	Yes	Yes
Magnitude of trip information		No	No	No	Yes	Yes
Remote signal contacts		No	No	Yes	Yes	Yes
Programmable contacts		No	No	No	No	Yes
System monitoring						
Digital display		No	No	4 char. LCD	4 char. LCD	24 char. LED
Current (%) full scale sensor		No	No	Yes	Yes	Yes +/- 1%
Voltage (%) L - L		No	No	No	No	Yes
Power and energy (%)		No	No	No	No	Yes
Apparent power kVA and demand		No	No	No	No	Yes
Reactive power kVAR		No	No	No	No	Yes
Power factor		No	No	No	No	Yes
Crest factor		No	No	No	No	Yes
Power quality - harmonics		No	No	No	No	Yes
% THD		No	No	No	No	Yes
System communications						
Type		No	No	No	INCOM/PowerNet	INCOM/PowerNet/ Trip Link
Power supply		N/A	N/A	PRM in breaker	PRM in breaker	PRM in breaker [2]
Additional features						
Trip log (3 events)		No	No	No	No	Yes
Electronic operations counter		No	No	No	No	Yes
Testing method [1]		Test set	Test set	Test set	Test set	Integral and test set
Waveform capture		No	No	No	No	Yes

I_n = Rating plug and sensor rating; I_r = Long delay pickup setting.

[1] Test set for secondary injection.

[2] New features will include over and under voltage alarm or trip, over and under frequency alarm or trip, voltage unbalance alarm or trip, and reverse power trip and phase rotation alarm. Contact Eaton for availability and more details.

[3] Only at LSIG with ground fault protection is the "i" of Digitrip required. The Digitrip 1150 will be provided on request.

Characteristics table

Magnum characteristics, dimensions and weights

Magnum frame		Narrow frame (MWN)			Standard frame (MWI)				Double-wide frame (MWI)		
Circuit breaker characteristics [1) 2)]		**MWN4**	**MWN5**	**MWN6**	**MWI6**	**MWI6**	**MWI8**	**MWIC**	**MWI6**	**MWI4**	**MWIC**
		800	800	800	800	~	800	800	4000	4000	4000
		1000	1000	1000	1000	~	1000	1000		5000	5000
Continuous current rating I_n		1250	1250	1250	1250	~	1250	1250		6300	6300
(Amps at 40 °C)		~	1600	1600	1600	~	1600	1600			
		~	2000	2000	~	2000	2000	2000			
					~	2500	2500	2500			
					~	3200	3200	3200			
Interrupt ratings at 690 V_{ac} I_{cu}/I_{cs} (kA_{rms}) [8)]		40/40	50/50	65/65	65/65	65/65	85/85	100/85 [4)]	65/65	85/85	100/100
Withstand rating I_{cw} 1 sec/3 sec (kA_{rms})		40/~	50/~ [3)]	65/40	65/~	65/50	85/65	85/65	65/~	85/~	100/~
Maximum break time (msec)		30	30	30	30	30	30	30	40	40	40
Maximum closing time (msec)		50	50	50	50	50	50	50	70	70	70
Circuit breaker dimensions (mm) [5)]											
Fixed	**Height**	425.7	425.7	425.7	425.7	425.7	425.7	425.7	425.7	425.7	425.7
	Depth	371.9	371.9	371.9	371.9	371.9	371.9	371.9	371.9	371.9	371.9
	Width (3-pole)	317.7	317.7	317.7	410.2	410.2	410.2	410.2	886.5	886.5	886.5
	Width (4-pole)	413	413	413	537.2	537.2	537.2	537.2	1120	1120	1120
Drawout	**Height**	524.3	524.3	524.3	524.3	524.3	524.3	524.3	524.3	524.3	524.3
	Depth	474.2	474.2	474.2	474.2	474.2	474.2	474.2	474.2	474.2	474.2
	Width (3-pole)	336	336	336	431.8	431.8	431.8	431.8	909	909	909
	Width (4-pole)	431.3	431.3	431.3	558.8	558.8	558.8	558.8	1036	1036	1036
Circuit breaker weight (kg) [5)]											
Fixed	**(3-pole)**	43	43	43	58 - 68	58 - 68	58 - 68	58 - 68	107.5	125.2	125.2
	(4-pole)	54	54	54	72 - 86	72 - 86	72 - 86	72 - 86	144.7	163.3	163.3
Drawout	**(3-pole)**	48	48	48	70 - 86	70 - 86	70 - 86	70 - 86	138.8	157.4	157.4
	(4-pole)	62	62	62	88 - 112	88 - 112	88 - 112	88 - 112	166	200	200
Cassette	**(3-pole)**	28	28	28	53 - 56	53 - 56	53 - 56	53 - 56	90.3	96.2	96.2
	(4-pole)	32	32	32	55 - 68	55 - 68	55 - 68	55 - 68	113.4	120.7	120.7

Non-auto switch characteristics										
Maximum interrupt ratings at 690 V_{ac} I_{cu}/I_{cs} (kA_{rms})	40/40	50/50	65/65	65/65	65/65	85/85	[7)]	65/65	85/85	100/100
Withstand ratings I_{cw} 1 sec/3 sec (kA_{rms})	40/~	50/~ [3)]	65/40	65/~	65/50	85/65	[7)]	65/~	85/~	100/~
Continuous current range (A)	to 1250	to 2000	to 2000	to 1600	2000	to 2000	~	to 4000	to 4000	to 4000
Close and latch current (kA peak) [6)]	40	50	50	50	50	59	~	100	100	100
Maximum continuous current range (A)	~	~	~	~	2500 & 3200	2500 & 3200	~	~	5000 & 6000	5000 & 6000
Close and latch current (kA peak) [6)]	~	~	~	~	80	80	~	~	157	157
Mechanical Endurance with maintenance Operating cycles (C-O) x 1000	20	20	20	20	20	20	20	15	15	15
Mechanical Endurance without maintenance 690 V Operating cycles (C-O) x 1000	10	10	10	10	10	10	10	10	10	10
Electrical Endurance without maintenance Operating cycles (C-O) x 1000	10	10	10	10	10	10	10	2.5	2.5	2.5

IP Rating										
Door Frame	IP20	IP20	IP20	IP20	IP20	IP20	IP20	IP20	IP20	IP20
Cover	IP54	IP54	IP54	IP54	IP54	IP54	IP54	IP54	IP54	IP54

1) Circuit breakers equipped with integral trip units have a making current release set to trip instantaneously at 25 x I_n peak current to prevent closing on a fault current exceeding that magnitude.
2) Magnum ACB's carry an IT rating at 440 V_{ac} per IEC 60947-2 Annex H. Contact Eaton for 690 V_{ac} IT applications.
3) The I_{cw} 1 sec/3 sec rating is 50/30 kA for 2000 A MWN 50 kA breaker.
4) Standard frame circuit breakers rated 100 kA are equipped with a high instantaneous trip set to protect above 85 kA_{rms}. I_{cu} is 100 kA and I_{cs} is 85 kA at 440 V_{ac}. I_{cu} and I_{cs} are 85 kA at 690 V_{ac}.
5) The approximate weights and dimensions shown are based on horizontal terminals.
6) Non-automatic switches should be applied with a suitable external overcurrent device with very fast instantaneous trip to protect above the published close and latch rating. If such a device is not used, a selective circuit breaker with trip unit and making current release should be used.
7) The maximum available instantaneous interrupting rating for the standard frame non-automatic switch is 85 kA.
8) Circuit breaker I_{cm} values are equal to I_{cu} times a constant. Value of the constant is either 2.1 or 2.2 as given in IEC 60947-2.

Dimensions (mm)

Magnum air circuit breakers have common heights and depths to facilitate standardized designs in low voltage panel systems.

Fixed design

800 - 2000 A narrow frame

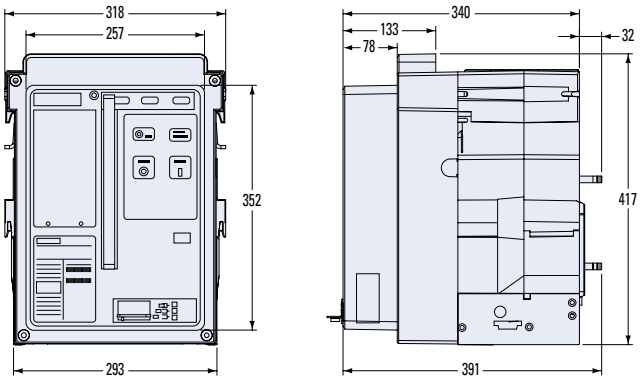

800 - 3200 A standard frame

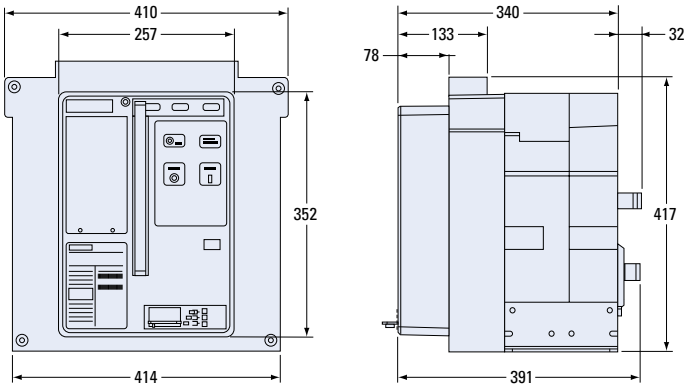

4000 - 6300 A double wide frame

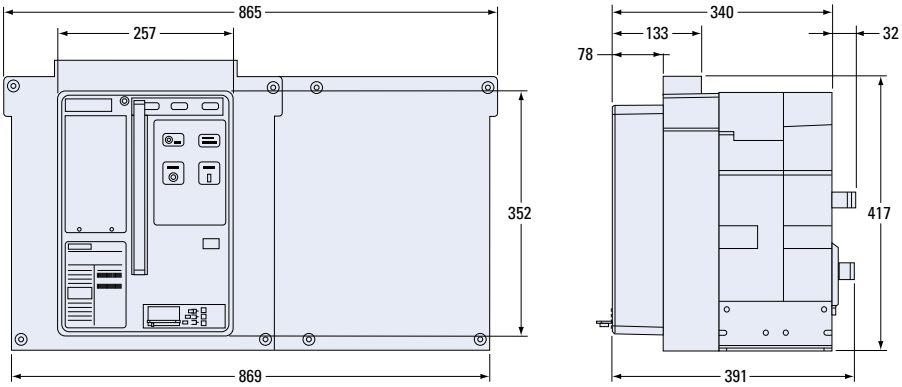

Withdrawable design

800 - 2000 A narrow frame

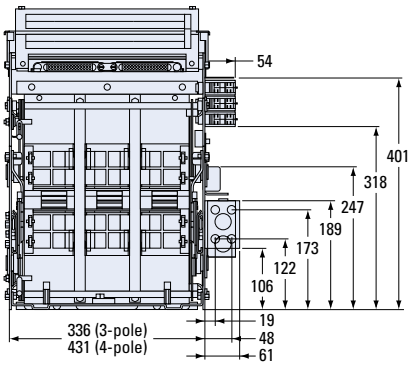

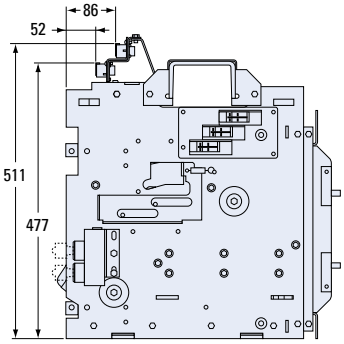

800 - 3200 A standard frame

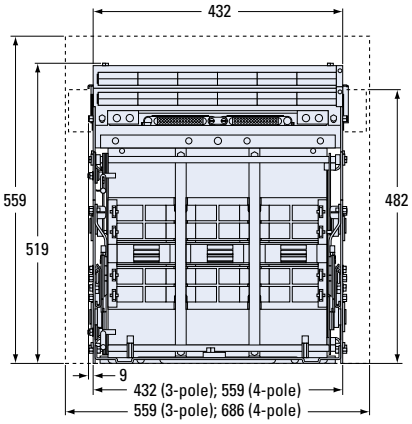

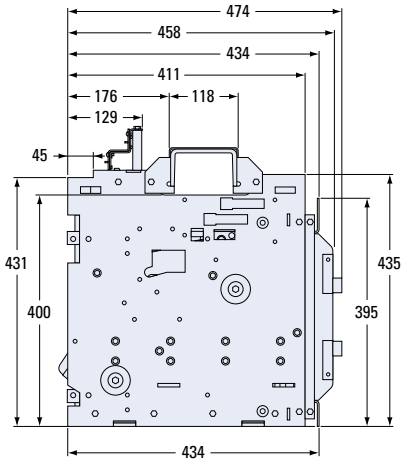

4000 - 6300 A double wide frame

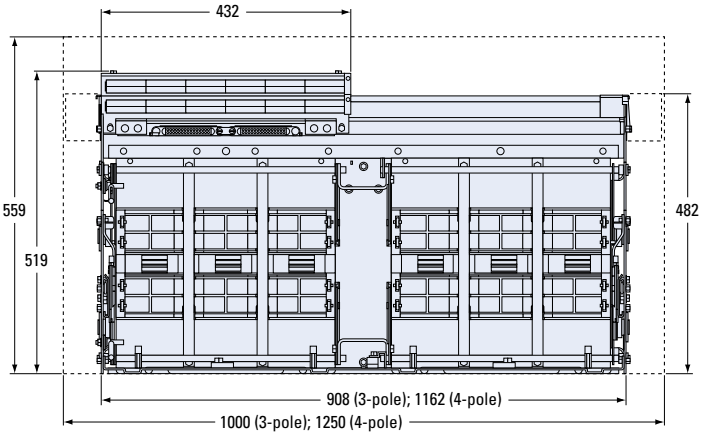

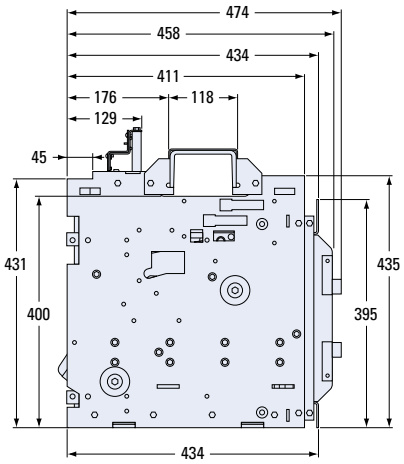

Eaton Corporation is a diversified power management company ranked among the largest Fortune 500 companies. The electrical group is Eaton's largest division and is a global leader in electrical control, power distribution, power quality, automation, and monitoring products and services. Eaton's global electrical brands, including Cutler-Hammer®, MGE Office Protection Systems™, Powerware®, Holec®, MEM®, Santak and Moeller, provide customer-driven PowerChain Management® solutions to serve the power system needs of the industrial, institutional, government, utility, commercial, residential, IT, mission critical and OEM markets worldwide.

PowerChain Management solutions help enterprises achieve a competitive advantage through proactive management of the power system as a strategic, integrated asset throughout its life cycle. With Eaton's distribution, generation and power quality equipment; full-scale engineering services; and information management systems, the power system is positioned to deliver powerful results: greater reliability, operating cost efficiencies, effective use of capital, enhanced safety, and risk mitigation.

Eaton Electric Limited
P.O. Box 19651
Riyadh 11445
Saudi Arabia
Tel: +966-1-460-2275
Fax: +966-1-460-2291

Eaton Electric Limited
P.O. Box 1270
Jeddah 21431
Saudi Arabia
Tel: +966-2-6822-750
Fax: +966-2-6622-835

Eaton Electric Limited
P.O. Box 1993
Doha
Qatar
Tel: +974-4654792
Fax: +974-4654792

Eaton Electric Limited
P.O. Box 425, 9 Shehab Street
No. 11 Mohandessin
Cairo, Egypt
Tel: +20-2-338-6170
Fax: +20-2-338-2025

Eaton Electric Limited
P.O. Box 510449
Al Ashrafiyeh
Amman 11151, Jordan
Tel: +962-6-4740-660
Fax: +962-6-4744-660

Eaton Electric Limited
P.O. Box 620
Al Khobar 31952
Saudi Arabia
Tel: +966-3-882-5424
Fax: +966-3-882-5732

Eaton Electric Limited
Reddings Lane
Birmingham B11 3EZ
United Kingdom
Customer Support Centre
Tel: +44 (0)8700 545 333
Fax: +44 (0)8700 540 333
email: ukcommorders@eaton.com

Eaton Electric Limited
Dubai World Trade Center
Level 23, P.O. Box 9398
Dubai, United Arab Emirates
Tel: +9714-331-3938
Fax: +9714-332-9239
email:
SalesOffDubaiUAE@eaton.com

Eaton Electric Limited
P.O. Box 48010
1st Floor, Liason House
State House Road
Nairobi, Kenya
Tel: +254 20 2719230
Fax: +254 20 2711969

Eaton Electric & Engineering Services Limited.
Unit 2206, 22/F Millennium City 1,
Tower 1, 388 Kwun Tong Road
Kwun Tong, Kowloon,
Hong Kong
Tel: +852 3105 8766
Fax: +852 2615 2289

© 2008 Eaton Electric B.V.

Due to continuous research and development policy Eaton Holec reserves the right to make changes in design and specifications of the products without prior written notice.

Form No. BR01301006U
1812 945 B/1/SG/October 2008

EATON | Bill

www.eatonelectrical.com