Powering Business Worldwide

Memshield 3 250A Panelboard/Pan Assemblies
EPBN1425, EPBN1625, EPBN1825, EPBN11225
EPBPN1425, EPBPN1625, EPBPN1825, EPBPN11225

Instruction leaflet LT1208 (08/11)

IMPORTANT NOTES

1. This product should be installed, commissioned and maintained by or under the supervision of a competent electrician in accordance with current electrical engineering Codes of Practice, Regulations for the Electrical equipment of Buildings (BS7671), CDM2007 - Construction (Design and Management) Regulations 2007, HSG150 - Health and Safety in Construction, Statutory requirements and any Specific instruction issued by the Company.
2. After completing the installation and testing of this product it is essential that this leaflet is drawn to the attention of the person responsible for its future operation and maintenance, and is at all times available for ready reference.
3. These notes assume throughout that the product is disconnected from the supply. It is essential that this is done before any work is carried out.
4. These Panelboards are only designed for use with Eaton MCCBs. Failure to comply will result in invalid warranty and certification.
5. Operation of the incoming and outgoing devices should only be carried out by an instructed or skilled person.

250A MCCB INCOMER FITTING EPBKN1253, EPBKN1254

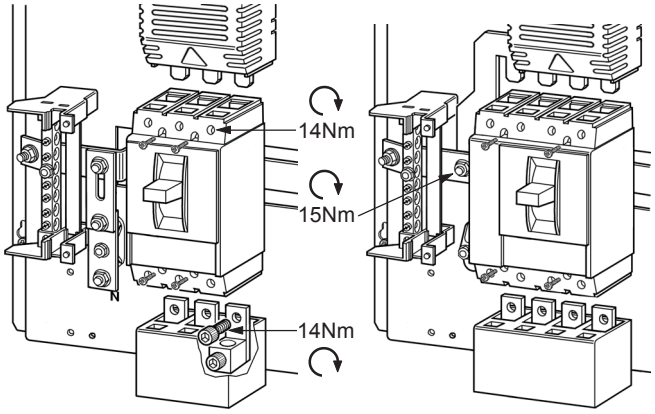

NOTE: When Top Fed, MCCB terminations must be reversed

250A DIRECT CABLE INCOMER FITTING EPBKN125L

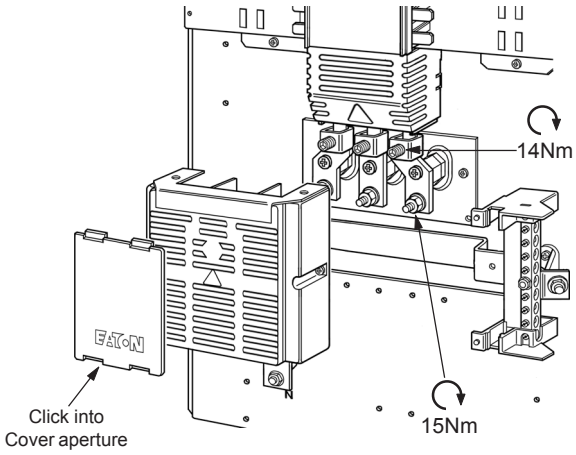

OUTGOING MCCB AND BLANK FITTING EPBN1BP1

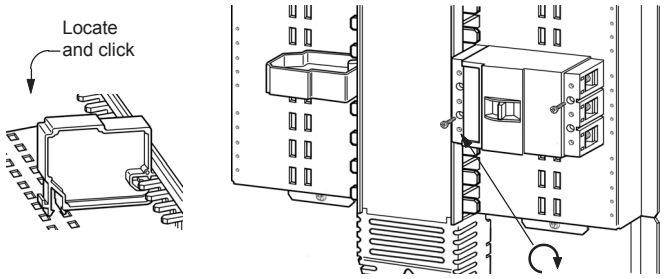

IMPORTANT: Fit MCCB with bottom Terminals to Busbar stabs as shown.

250A PAN ASSEMBLY DIMENSIONS EPBPN1425 - EPBPN11225

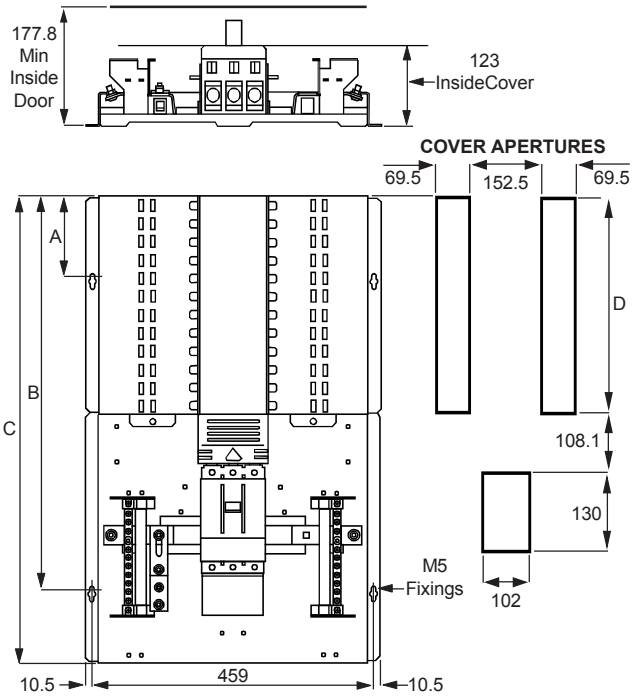

CAT N0.	A	B	C	D
EPBPN1425	29.5	483	592.5	181.5
EPBPN1625	29.5	578.5	683	272
EPBPN1825	131	669	773.5	362.5
EPBPN11225	131	850	954.5	543.5

All Dimensions in millimetres

250A CABLE BOX, EXTENSION BOX, FILLER BOX AND DIN ENCLOSURE EPBN1425SXB - EPBN11225SXB, EPBN1XE250, EPBN1CX250, EPBN1EXDIN

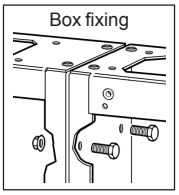

NB - Provision to reposition Earth Terminals in Cable Box

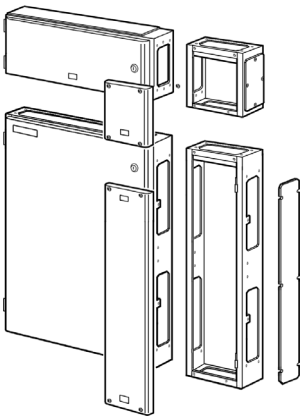

LH OUTGOING CIRCUITS	RH OUTGOING CIRCUITS

FED FROM: _____

INCOMING CABLE SIZE: _____

INSTALLATION DATE: _____

CONTRACTOR: _____

TOP FEED ADAPTOR FITTING EPBKTFSN2

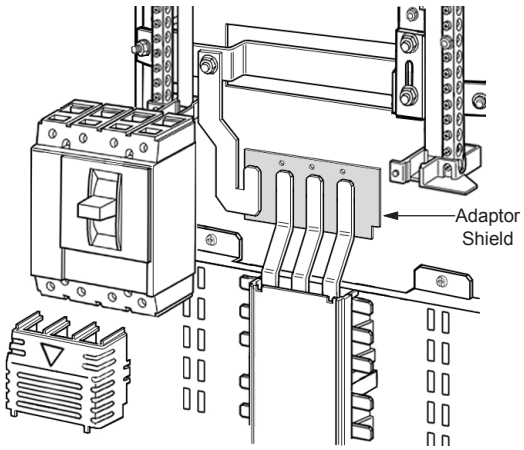

USED IN CONJUNCTION WITH EPBKN1253 AND EPBKN1254

KEY LOCK FITTING EPBDLK1

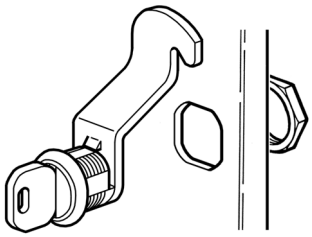

TOP ENTRY

Panelboards are supplied ready for bottom entry.
For top entry convert as shown below.

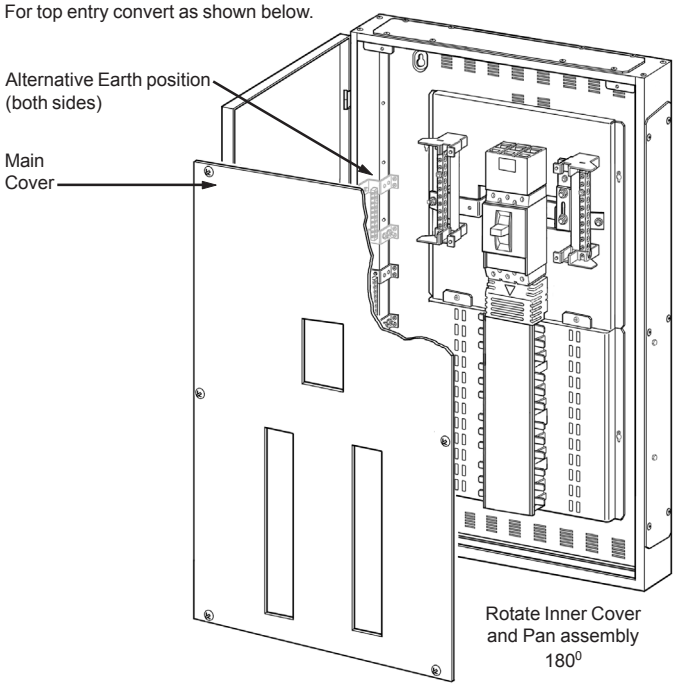

Prior to cabling, check pan assembly alignment with main cover

LABEL FITTING

Ensure all way labels are fitted in the correct places

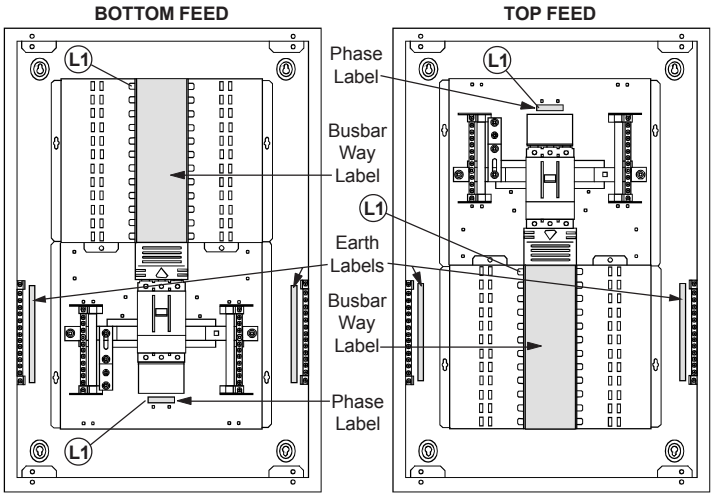

Warning -
Intellectual Property Rights
Eaton wishes to make it clear that it owns intellectual property rights in the product which it manufactures (whether or not listed in this leaflet) and that it will take legal action against any party found to be manufacturing, using, or selling any article which infringes the company's intellectual property. All marks in this document identified with an R symbol or a TM symbol adjacent to the mark are trademarks of Eaton.

© 2004 Eaton Electric Limited.
All rights reserved.

The use to which this product is put and its place of installation is outside our control. Particular care should therefore be taken to follow the instructions given here and to ensure their continued availability in conjunction with the use of the product.
No responsibility can be accepted by us if these instructions are disregarded.
Further copies of these instructions and information concerning the installation and proper use of this product can be obtained by contacting the:

Technical Services Department
Eaton Electric Limited, Reddings Lane, Tyseley, Birmingham B11 3EZ.
Tel: +44(0)8700 545 333, Fax: +44(0)8700 540 333
Tel: +44(0)121 685 2100, Fax: +44(0)121 706 2012
email: ukcommorders@eaton.com