Powering Business Worldwide

Memshield 3 630/800A Panelboard/Pan Assemblies
EPBN2863, EPBN21263, EPBN21863, EPBN3880, EPBN31240
EPBPN2863, EPBPN21263, EPBPN21863, EPBPN3880, EPBPN31240

Instruction leaflet LT1210 (09/11)

IMPORTANT NOTES

1. This product should be installed, commissioned and maintained by or under the supervision of a competent electrician in accordance with current electrical engineering Codes of Practice, Regulations for the Electrical equipment of Buildings (BS7671), CDM2007 - Construction (Design and Management) Regulations 2007, HSG150 - Health and Safety in Construction, Statutory requirements and any Specific instruction issued by the Company.
2. After completing the installation and testing of this product it is essential that this leaflet is drawn to the attention of the person responsible for its future operation and maintenance, and is at all times available for ready reference.
3. These notes assume throughout that the product is disconnected from the supply. It is essential that this is done before any work is carried out.
4. These Panelboards are only designed for use with Eaton MCCBs. Failure to comply will result in invalid warranty and certification.
5. Operation of the incoming and outgoing devices should only be carried out by an instructed or skilled person.

630A MCCB INCOMER FITTING

EPBKN2633 EPBKN2634

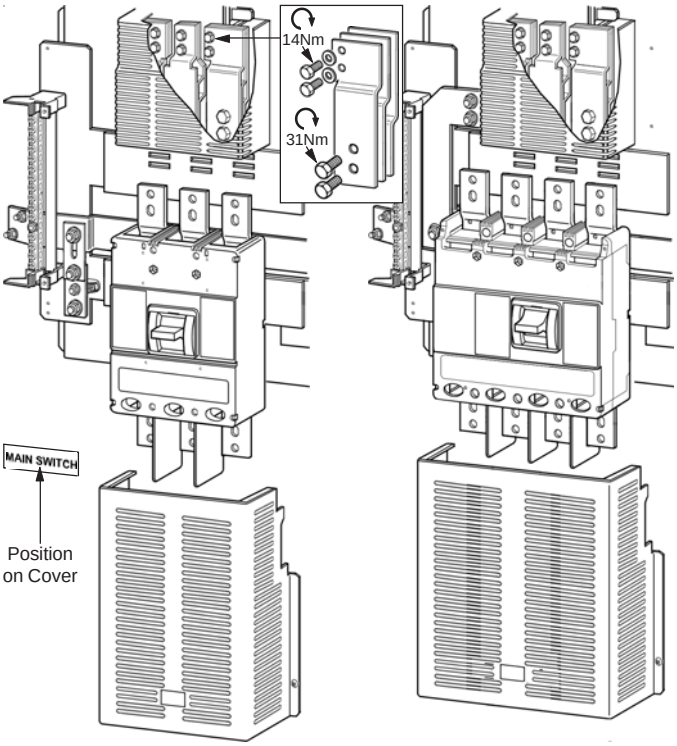

800A MCCB INCOMER FITTING

EPBKN3803 EPBKN3804

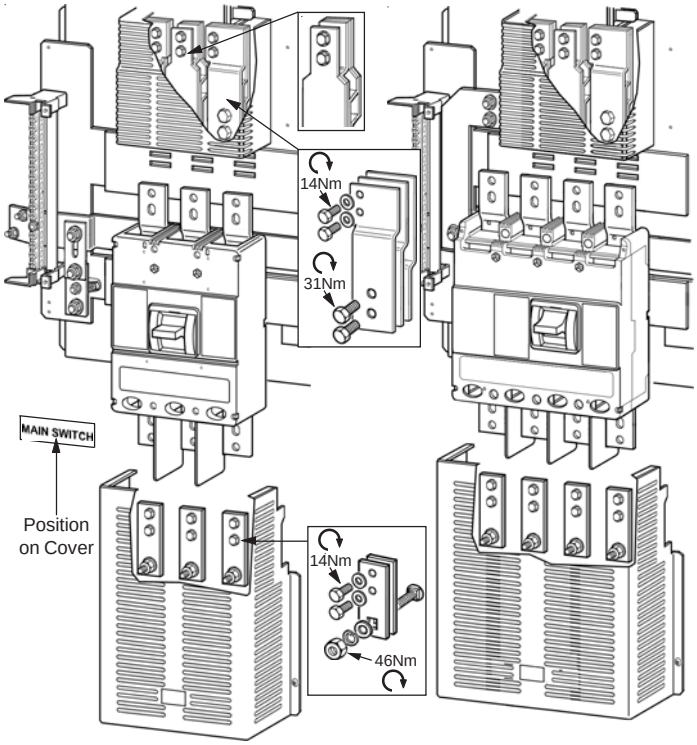

NOTE: When Top Fed, MCCB terminations must be reversed

630A DIRECT CABLE INCOMER FITTING EPBKN263L (FOR 630A PANELBOARDS ONLY)

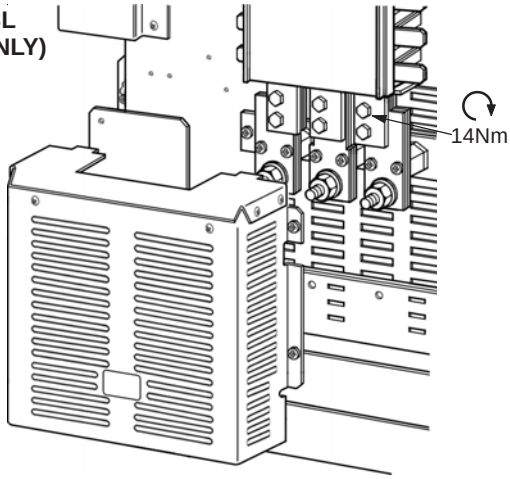

MCCB INCOMING COVER KNOCKOUT REMOVAL

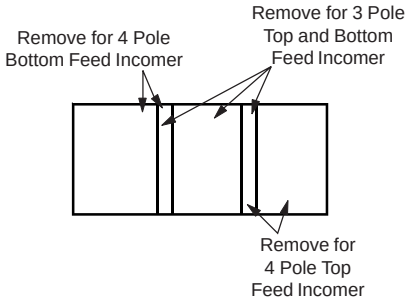

DO NOT REMOVE FOR DIRECT CABLE INCOMER

OUTGOING MCCB & BLANK FITTING EPBN1BP1, EPBN2BP3, EPBN3BP3

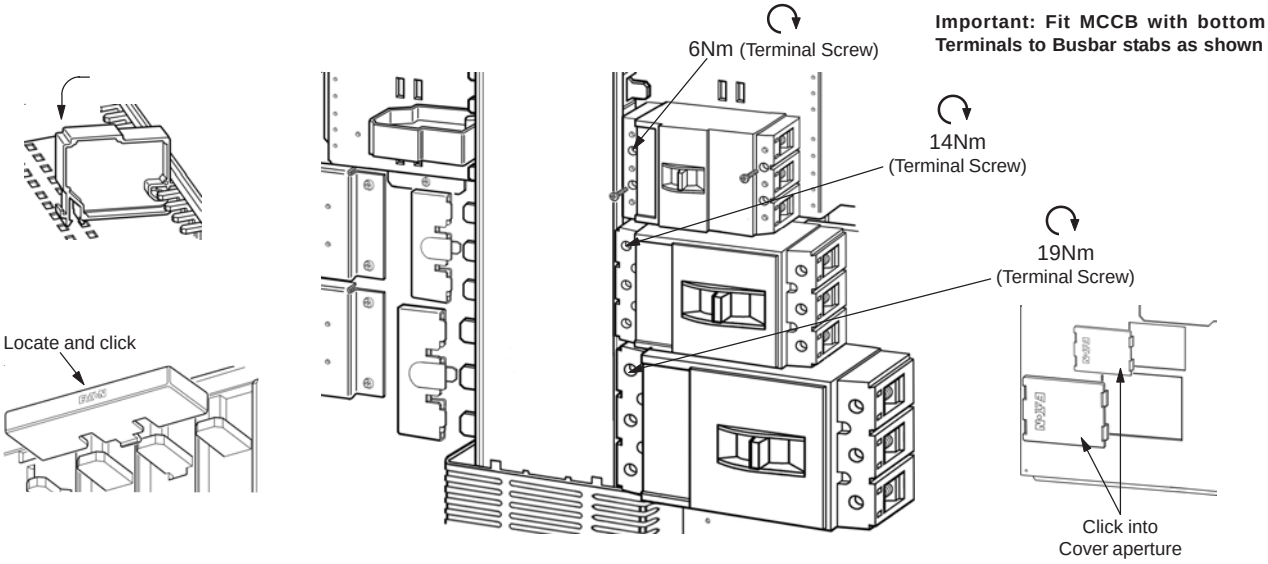

630/800A PAN ASSEMBLY DIMENSIONS
EPBPN2863, EPBPN21263, EPBPN21863, EPBPN3880, EPBPN31280

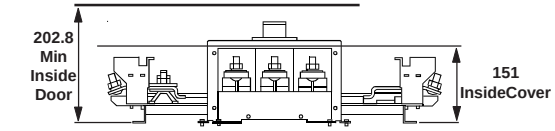

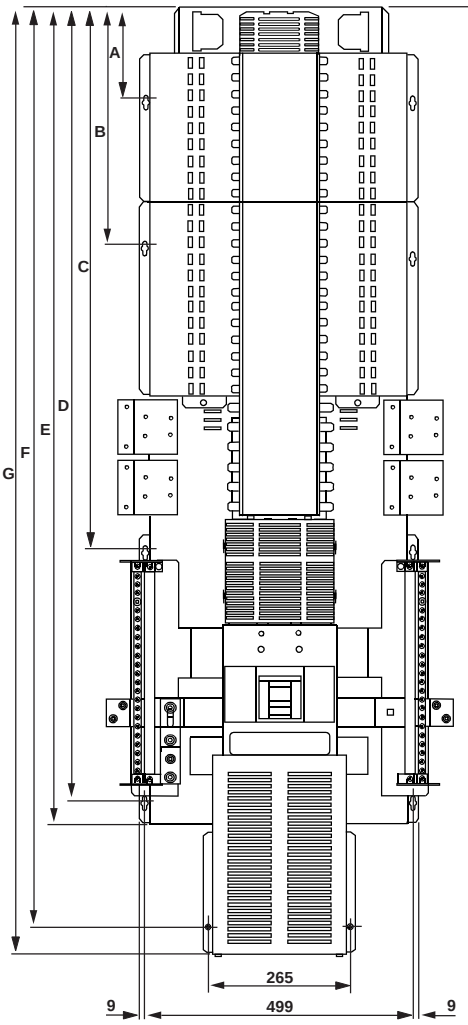

COVER APERTURES

EPBPN2863, EPBPN21263, EPBPN21863

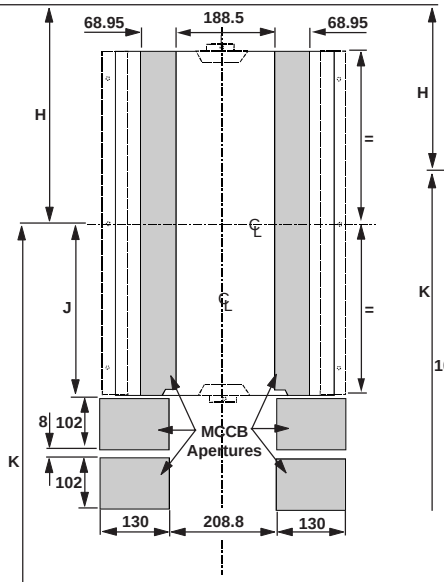

EPBPN31280

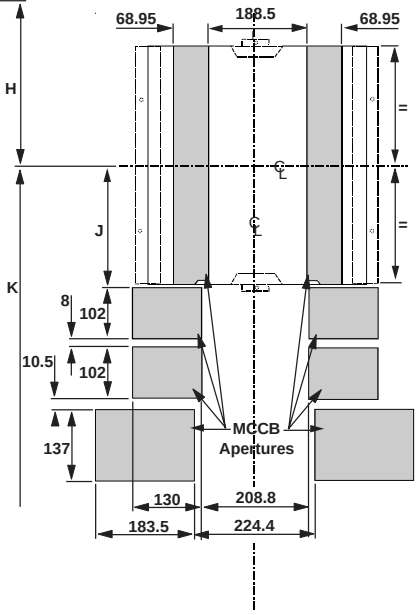

EPBPN3880

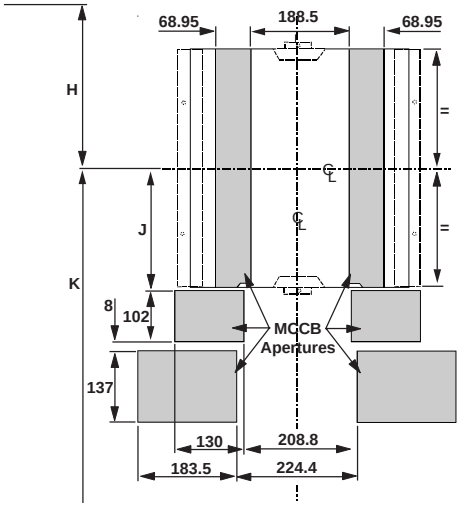

CAT N0.	A	B	C	D	E	F	G	H	J	K
EPBPN2863	167	N/A	543.5	996	1052.5	1240	1291	177	96.75	601.5
EPBPN21263	167	N/A	724.5	1177	1233.5	1421	1472	267.5	187.25	692
EPBPN21863	167	438.5	996	1448.5	1505	1692	1743	403.25	323	828
EPBPN3880	167	N/A	580.5	1033	1089.5	1277	1328	177	96.75	638.5
EPBPN31280	167	N/A	761.5	1214	1270.5	1458	1509	222.25	142	794.5

630/800A CABLE BOX, EXTENSION BOX, FILLER BOX AND DIN ENCLOSURE FITTING
EPBN2183SXB, EPBN21863SXB
EPBN3EX250, EPBN2CX250, EPBN3EXDIN

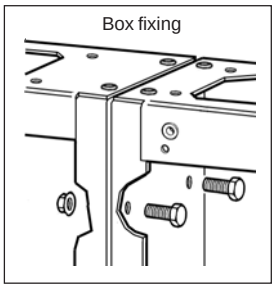

NB - Provision to reposition Earth Terminals in Cable Box

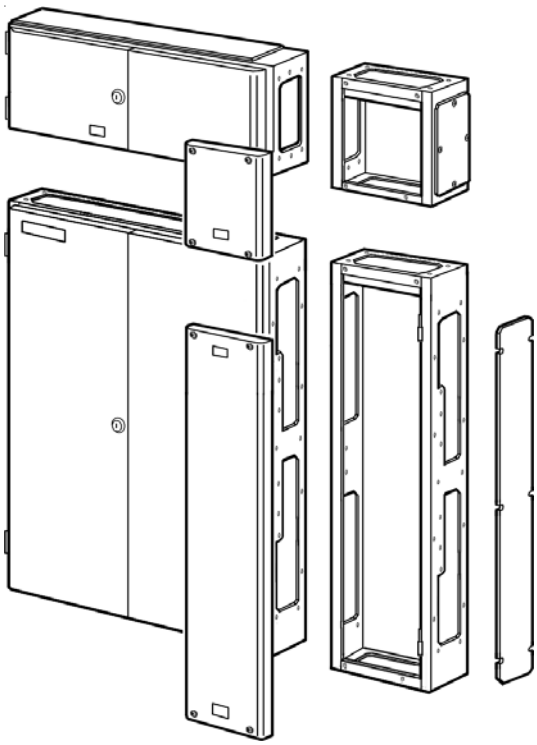

TOP ENTRY

Panelboards are supplied ready for bottom entry. For top entry convert as shown below.

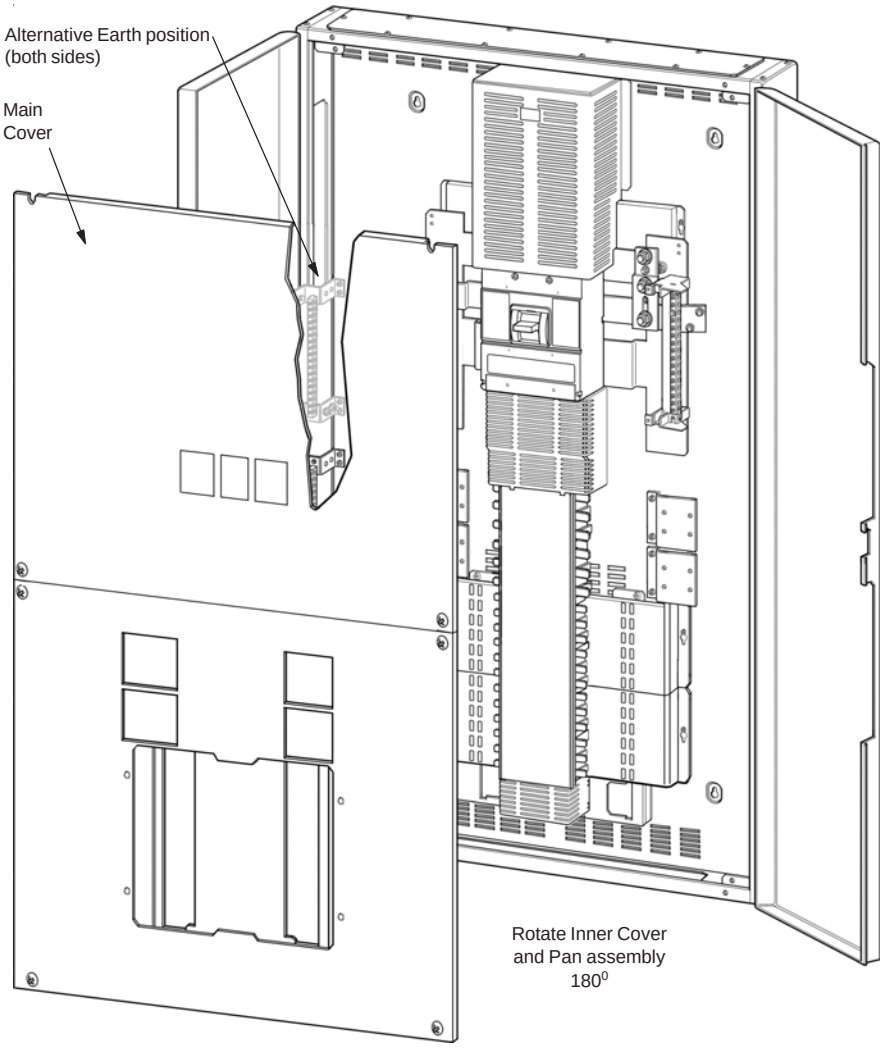

Prior to cabling, check pan assembly alignment with main cover

TOP FEED ADAPTOR FITTING EPBKTFSLW

3 POLE

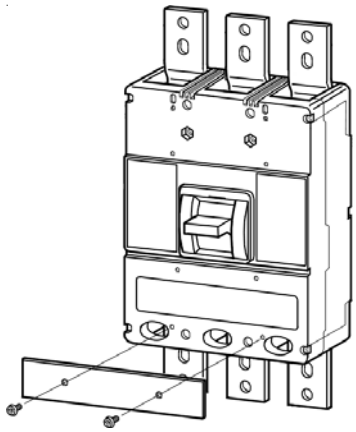

4 POLE

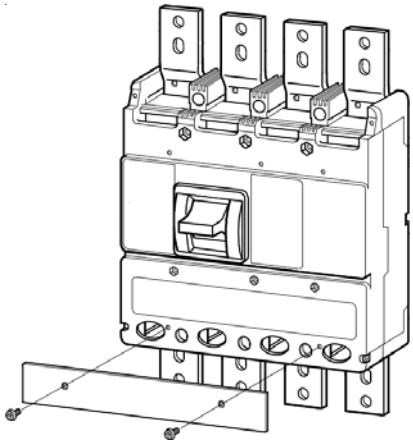

LH OUTGOING CIRCUITS	RH OUTGOING CIRCUITS

FED FROM: ______________________________

INCOMING CABLE SIZE: ______________________________

INSTALLATION DATE: ______________________________

CONTRACTOR: ______________________________

LABEL FITTING Ensure all way labels are fitted in the correct places

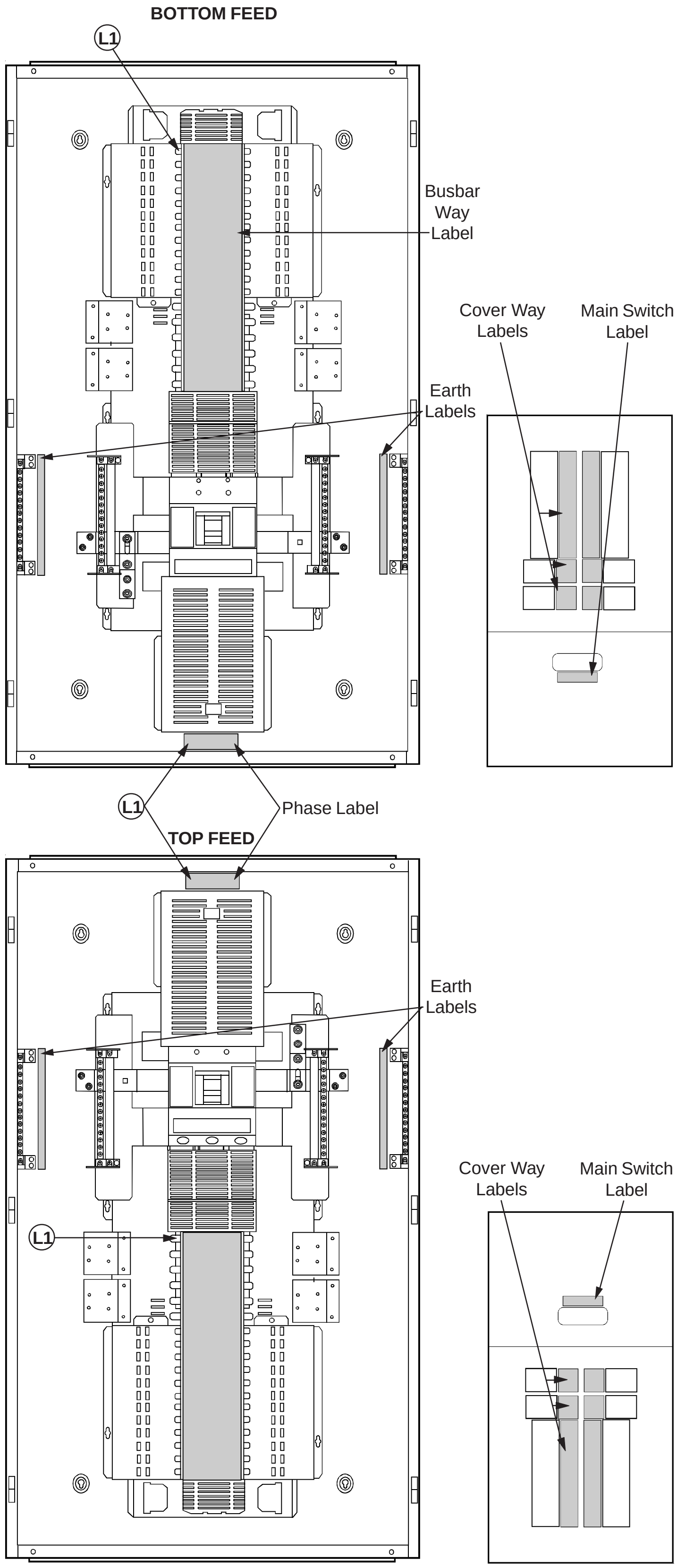

Warning -
Intellectual Property Rights
Eaton wishes to make it clear that it owns intellectual property rights in the product which it manufactures (whether or not listed in this leaflet) and that it will take legal action against any party found to be manufacturing, using, or selling any article which infringes the company's intellectual property. All marks in this document identified with an R symbol or a TM symbol adjacent to the mark are trademarks of Eaton.

© 2004 Eaton Electric Limited,
All rights reserved.

The use to which this product is put and its place of installation is outside ourcontrol. Particular care should therefore be taken to follow the instructions given here and to ensure their continued availability in conjunction with the use of the product. No responsibility can be accepted by us if these instructions are disregarded. Further copies of these instructions and information concerning the installation and proper use of this product can be obtained by contacting the:

Technical Services Department
Eaton Electric Limited, Reddings Lane, Tyseley, Birmingham B11 3EZ.
Tel: +44(0)8700 545 333, Fax: +44(0)8700 540 333
Tel: +44(0)121 685 2100, Fax: +44(0)121 706 2012
email: ukcommorders@eaton.com