Powering Business Worldwide

MEMSHIELD 3 PANELBOARD SURGE PROTECTION DEVICE
INSTALLATION INSTRUCTIONS FOR EPBN1SPD123 AND EPBN1SPD1234

Instruction leaflet LT1215 (7/11)

IMPORTANT NOTES

1. This product should be installed, commissioned and maintained by or under the supervision of a competent electrician in accordance with current electrical engineering Codes of Practice, Regulations for the Electrical equipment of Buildings (BS7671), CDM2007 - Construction (Design and Management) Regulations 2007, HSG150 - Health and Safety in Construction, Statutory requirements and any Specific instruction issued by the Company.
2. After completing the installation and testing of this product it is essential that this leaflet is drawn to the attention of the person responsible for its future operation and maintenance, and is at all times available for ready reference.
3. These notes assume throughout that the product is disconnected from the supply. It is essential that this is done before any work is carried out.
4. These Panelboards are only designed for use with Eaton MCCBs. Failure to comply will result in invalid warranty and certification.

FIG.1.

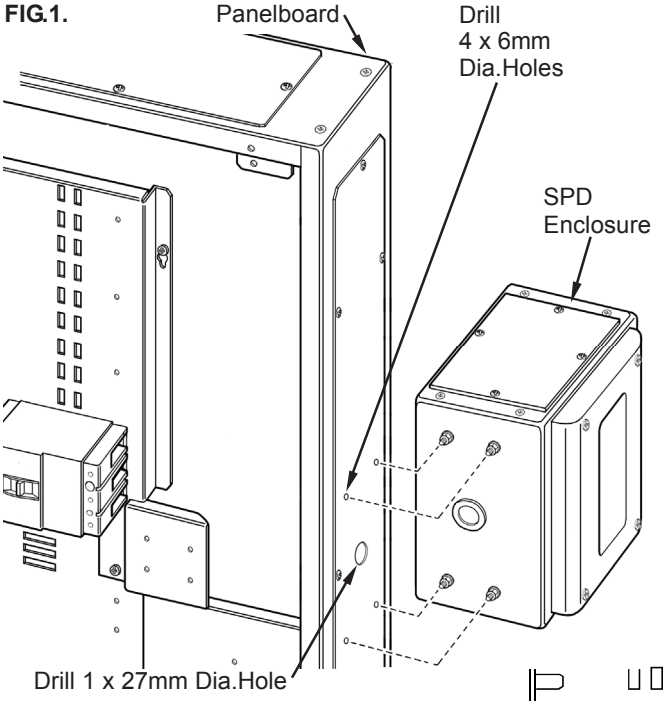

Wiring Diagram

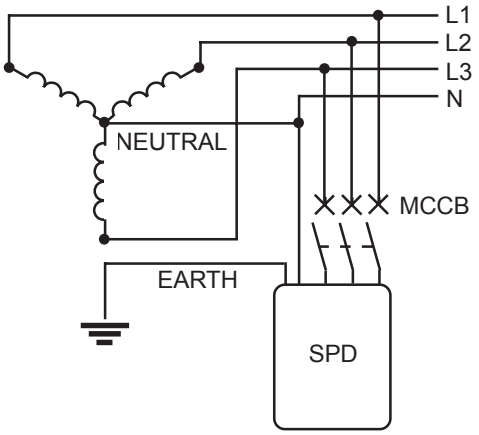

FIG.2. Cabling

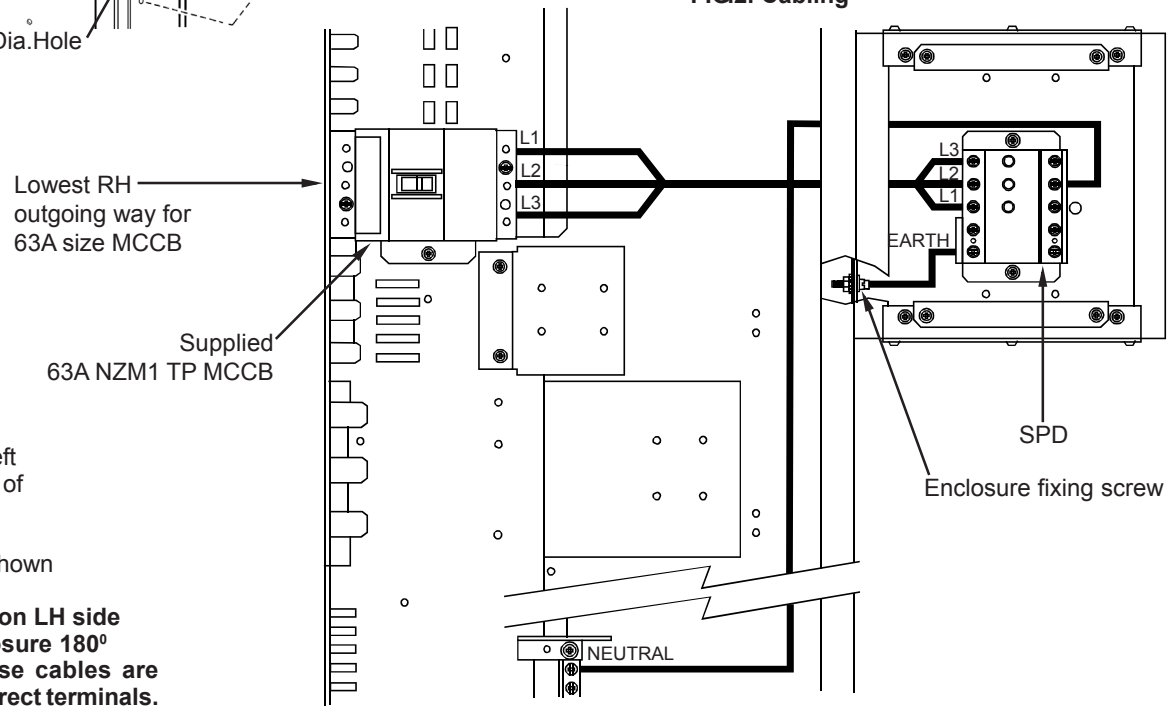

NOTE:
SPD can be mounted on the left or right hand side of the panelboard.

Right hand side shown

When mounting on LH side rotate SPD enclosure 180⁰ and ensure phase cables are connected to correct terminals.

BEFORE INSTALLATION:

A. Verify that the system is wired in a Three Phase Star configuration and that the voltage rating of the system matches the voltage rating of the SPD as shown on label.
If Neutral to Earth voltage is greater than 5 VAC, then a problem may exist in the electrical system. The SPD may be installed; however, a qualified person should be consulted to correct the problem.

B. The SPD must be connected to the Memshield 3 Panelboard via the Triple Pole 63A MCCB supplied.
NOTE: If the SPD is to be used in conjunction with equipment other than a Series G Panelboard, the SPD must be connected via an appropriate protective device for the location of the installation.

NOTE FOR CLEAN EARTH:

If the system utilises a clean earth, the green/yellow earth wire must be connected to the clean earth bar.

INSTALLATION INSTRUCTIONS:

1. **ISOLATE INCOMING ELECTRICAL SUPPLY.**

2. SPD MOUNTING POSITION
The SPD should be mounted for the shortest and straightest possible wire installation from the SPD to the MCCB and Earth/Neutral Busbar. It is strongly recommended that the FIRST outgoing NZM1 way be used to minimise the connecting wire length.
Excessive wire length and sharp bends degrade SPD performance: therefore, avoid excessive wire length and sharp bends when at all possible.

3. ASSEMBLE SPD ENCLOSURE TO STANDARD PANELBOARD (as shown in Fig.1.).
- Position the SPD enclosure on either the left or right side of the Board and align it so that the 27.0 mm Dia hole is approximately in line with the centre of the lowest outgoing way for a 63A size MCCB.
- Using the SPD enclosure as a template, mark position of holes onto the Panelboard side plate.
- With care, drill 4 holes 6mm dia into the Panelboard side plate and 1 hole 27.0 mm dia in line with the middle of the MCCB. Fig.1.
- Remove burrs and ensure both enclosures are free of debris.
- Bolt both enclosures in position, ensure that the nuts and shakeproof washers are inside the Panelboard. Insert grommet in 27mm hole.

4. CABLE SPD. (As shown in Fig.2).
- Keep the wire(s) as short as possible for optimum SPD performance.
- Connect the EARTH wire to the nearest bolt (see Fig.2.).
- Refer to the NOTE for systems utilising the clean earth.
- Connect the NEUTRAL wire to the Neutral Busbar.
- Connect Phase wire to the MCCB at L1, L2 & L3.
- Tie wrap all cables together for optimum SPD performance.

5. Energise the System.
- For the SPD ‘EPBN1SPD123’ the red Indicator should remain locked in position.
  If the red indicator POPS UP, de-energise and contact the Technical Services department.
- For the SPD ‘EPBN1SPD1234’ the Indicator should remain green.
  If the indicator turns RED, de-energise and contact the Technical Services department.
  (See below).

Warning -
Intellectual Property Rights
Eaton wishes to make it clear that it owns intellectual property rights in the product which it manufactures (whether or not listed in this leaflet) and that it will take legal action against any party found to be manufacturing, using, or selling any article which infringes the company’s intellectual property. All marks in this document identified with an R symbol or a TM symbol adjacent to the mark are trademarks of Eaton.

© 2004 Eaton Electric Limited.
All rights reserved.

The use to which this product is put and its place of installation is outside our control. Particular care should therefore be taken to follow the instructions given here and to ensure their continued availability in conjunction with the use of the product.
No responsibility can be accepted by us if these instructions are disregarded.
Further copies of these instructions and information concerning the installation and proper use of this product can be obtained by contacting the:

Technical Services Department
Eaton Electric Limited, Reddings Lane, Tyseley, Birmingham B11 3EZ.
Tel: +44(0)8700 545 333, Fax: +44(0)8700 540 333
Tel: +44(0)121 685 2100, Fax: +44(0)121 706 2012
email: ukcommorders@eaton.com