Size 4 Vacuum Contactor

7.1 NEMA, Special Purpose and Mining Rating

Product Description V5-T7-2
Application Description V5-T7-2
Operation V5-T7-2
Features V5-T7-2
Benefits V5-T7-2
Standards and Certifications V5-T7-2
Product Selection V5-T7-3
Accessories V5-T7-4
Replacement Parts V5-T7-6
Technical Data and Specifications V5-T7-7
Wiring Diagrams V5-T7-9
Dimensions V5-T7-10

NEMA, Special Purpose and Mining Rating

Contents

Description	*Page*
NEMA, Special Purpose and Mining Rating	
Product Selection	**V5-T7-3**
Accessories	**V5-T7-4**
Replacement Parts	**V5-T7-6**
Technical Data and Specifications	**V5-T7-7**
Wiring Diagrams	**V5-T7-9**
Dimensions	**V5-T7-10**

Product Description

Vacuum contactors and starters were designed for starting and controlling three-phase, 50/60 Hz, AC motors. Each contact is enclosed in a vacuum bottle to reduce and contain contact arcing. This design offers excellent performance for plugging and jogging applications.

Application Description

The vacuum contactors and starters are offered in three classifications. They are NEMA rated devices up to 600 Vac, Special Purpose rated devices up to 1500 Vac and Mining rated devices rated up to 1500 Vac. Each device is tested to different standards to serve its market.

Typical applications include full voltage control of three-phase squirrel cage motors, primary control of low voltage wound rotor motors and circuit switching for low voltage capacitors for power factor improvement.

A vacuum contactor is affected by atmospheric pressure on the bellows of the vacuum bottles. Up to an altitude of 6600 feet, the contactor is designed to tolerate normal variations in barometric pressure. If the contactor is to be operated above 6600 feet above sea level, consult your Eaton representative.

Operation

The contact structure of the vacuum break contactor is located inside sealed ceramic tubes that have been evacuated of air. Any arc occurring across the contacts upon opening is automatically extinguished because ionized air is not available to sustain it—the arc breaks when the current passes through zero. The arc typically does not service beyond the first half cycle once the contacts begin to separate. The large arc chutes normally associated with contactors of this size are not required. The ceramic tube with the moving and stationary contacts is called a **vacuum interrupter or bottle**. There is one bottle for each pole on the contactor. A metal bellows (like a small, circular accordion) within the bottle allows the moving contact to be closed and pulled open from the outside without leaking air into the bottle. Both the bellow and the metal-to-ceramic seals of these state-of-the-art bottles have been refined to the point where the possibility of loss of vacuum has been virtually eliminated.

Features

- Rugged, compact and lightweight
- Quiet operation
- Electrical and mechanical interlocks available
- Long service life

Benefits

- Easy maintenance with front removable coil and auxiliaries
- Eliminate extra surge suppressors with the standard low chop interrupters
- Plan your preventative maintenance schedule by utilizing the contact wear indicator, standard on all vacuum bottles

Standards and Certifications

- NEMA Devices
  - UL Listed File #E1491, Guide Number NLDX
  - CSA Approved
- Special Purpose Devices
  - IEC 947-4-1
  - CE Approved EN 60947-4-1
  - UL Listed File #E1491, Guide Number NLDX
  - CSA Approved

Listed

Product Selection

When Ordering Specify

- Catalog number
- Heater pack if ordering a starter, order in quantities of three
- Any required accessories

Size 4 Vacuum Contactor

NEMA Rated Vacuum Contactors and Starters

NEMA Size	Ampere Rating	Motor Voltage	Maximum Horsepower Rating	Magnet Coil Voltage ①	Contactor Non-Reversing Catalog Number	Contactor Reversing Catalog Number	Starter Non-Reversing Catalog Number ②
4	135	200 230 380 460 575	40 50 75 100 100	110/120	**V201K4CJ**	**V211K4CJ**	**V200M4CJC**
				220/240	**V201K4CK**	**V211K4CK**	**V200M4CK**
				440/480	**V201K4CU**	**V211K4CU**	**V200M4CU**
5	270	200 230 380 460 575	75 100 150 200 200	110/120	**V201K5CJZ1**	**V211K5CJZ1**	**V200M5CJC**
				220/240	**V201K5CKZ1**	**V211K5CKZ1**	**V200M5CK**
				440/480	**V201K5CUZ1**	**V211K5CUZ1**	**V200M5CU**
6	540	200 230 380 460 575	150 200 300 400 400	110/120	**V201K6CJZ1**	**V211K6CJZ1**	**V200M6CJC**
				220/240	**V201K6CKZ1**	**V211K6CKZ1**	**V200M6CK**
				440/480	**V201K6CUZ1**	—	**V200M6CU**

160A Vacuum Contactor

Special Purpose Vacuum Contactors and Starters

Ampere Rating	Motor Voltage	Maximum Horsepower Rating	Magnet Coil Voltage ①	Contactor Non-Reversing Catalog Number	Contactor Reversing Catalog Number	Starter Non-Reversing Catalog Number ②	Starter Reversing Catalog Number ②
160	200 230 380 460 575 800 1500	50 60 100 125 150 200 400	110/120	**V201KRCJ**	**V211KRCJ**	—	—
			220/240	**V201KRCK**	**V211KRCK**	—	—
			380/415	**V201KRCH**	**V211KRCH**	—	—
			440/480	**V201KRCU**	**V211KRCU**	—	—
320	200 230 380 460 575 795 1500	100 125 200 250 300 400 800	110/120	**V201KTCJZ1**	**V211KTCJZ1**	**V200MTCJC**	**V210MTCJC**
			220/240	**V201KTCKZ1**	**V211KTCKZ1**	**V200MTCK**	**V210MTCK**
			380/415	**V201KTCHZ1**	**V211KTCHZ1**	**V200MTCH**	**V210MTCH**
			440/480	**V201KTCUZ1**	**V211KTCUZ1**	**V200MTCU**	**V210MTCU**
540 ③	200 230 380 460 575 795 1500	150 200 300 400 500 700 1300	110/120	**V201KVCJZ1**	**V211KVCJZ1**	**V200MVCJ**	**V210MVCJ**
			220/240	**V201KVCKZ1**	**V211KVCKZ1**	**V200MVCK**	**V210MVCK**
			380/415	**V201KVCHZ1**	—	**V200MVCH**	—
			440/480	**V201KVCUZ1**	—	**V200MVCU**	—
610	200 230 380 460 575 795 1500	200 200 300 450 500 800 1600	110/120	**V201KZCJZ1**	**V211KZCJZ1**	—	—
			220/240	**V201KZCKZ1**	**V211KZCKZ1**	—	—
			380/415	**V201KZCHZ1**	—	—	—
			440/480	**V201KZCUZ1**	—	—	—

Notes

① Coils are rated for 50/60 Hz applications.
② Starters use Type B overload relay. Refer to Heater Coil Selection table on **Page V5-T7-6**. Starters do not include heater packs.
③ The 540A device does not carry CE or IEC ratings.

160A Mining Vacuum Contactor

Mining Rated Vacuum Contactors and Starters

Ampere Rating	Motor Voltage	Maximum Horsepower Rating	Magnet Coil Voltage ①	Contactor Non-Reversing Catalog Number
160	200 230 380 460 575 800 1500	50 60 100 125 150 200 400	110/120	**VM160CJ**
			220/240	**VM160CK**
			440/480	**VM160CU**
320	200 230 380 460 575 795 1500	100 125 200 250 300 400 800	110/120	**VM320CJZ1**
			220/240	**VM320CKZ1**
			440/480	**VM320CUZ1**
610	200 230 380 460 575 795 1500	150 200 300 400 500 700 1300	110/120	**VM610CJZ1**
			220/240	**VM610CKZ1**
			440/480	**VM610CUZ1**

Accessories

Lug Sizes

- Size 4—12–4/0
- NEMA Size 5 and 6 and 320A, 540A and 610A—supplied without line or load lugs.

Lug Kits—Consist of Six Lugs

Size	Description	Catalog Number
5 and 320A	1/0–500 kcmil	**C325KAL8**
6, 540A and 610A	1/0–500 kcmil double barrel	**C325KAL9**
610A	1/0–600 kcmil double barrel	**80-19825-2**

Field Modification Kits

Auxiliary Electrical Contacts

Size 4—Three Type J auxiliary contacts may be mounted on the top of Size 4 contactors to provide six auxiliary, isolated 600V, 10A contacts for use in control circuits.

Sizes 5–6—Two Type J auxiliary contacts may be mounted on each side of Size 5 and 6 contactors to provide four auxiliary, isolated 600V,10A contacts for use in control circuits.

Auxiliary Electrical Contacts

Contact Arrangement	Catalog Number
1NO, 1NC	**J11**
2NO	**J20**
2NC	**J02**

Horizontal Mechanical Interlock

Size	Catalog Number
4	**180C113G04**
5	**180C113G16**
5	**180C113G17**

Note

① Coils are rated for 50/60 Hz applications.

AEGIS Powerline Filters

Ideal for applications that utilize 120 Vac or 240 Vac control voltage and have the likelihood of harmonics or noise being present on the control signal. These are stand-alone devices, not mounted to the contactor.

AEGIS Powerline Filters Protect Against the Full Spectrum of Transient Disturbances

AEGIS filters the entire sine wave and is effective against both frequently occurring low energy and occasional high energy transients. High energy transients can create immediate damage, while low energy transients cause coil failure over time.

Catalog Numbering System

AEGIS-HW (Hard Wire Application)

230V applies to 220V and 240V applications.

AGSHW CH ____ __ X _

Voltage Code
120N
230L

Current Capacity
03
05
10
15 ①
20

Options
S = Standard
C = Form C contact for remote monitor

AEGIS Powerline Filters

Catalog Number ②	Catalog Number ②
AGSHWCH120N03XC	AGSHWCH230L03XC
AGSHWCH120N03XS	AGSHWCH230L03XS
AGSHWCH120N05XC	AGSHWCH230L05XC
AGSHWCH120N05XS	AGSHWCH230L05XS

Notes

① Model tested at 15A UL/CSA = 16A CE.

② See AEGIS Powerline Filters in **Volume 3—Power Distribution and Control Assemblies**, CA08100004E, Tab 2.

Heater Coils

Heater Coils for Type B Overload Relay ①

Open Starter Ambient Compensated Overload Relay	Heater Catalog Number ②
Size 4 and 160A	
12.8–14.1	**FH68**
14.2–15.5	**FH69**
15.6–17.1	**FH70**
17.2–18.9	**FH71**
19.0–20.8	**FH72**
20.9–22.9	**FH73**
23.0–25.2	**FH74**
25.3–27.8	**FH75**
27.9–30.6	**FH76**
30.7–33.5	**FH77**
33.6–37.5	**FH78**
37.6–41.5	**FH79**
41.6–46.3	**FH80**
46.4–50	**FH81**
51–55	**FH82**
56–61	**FH83**
62–66	**FH84**
67–73	**FH85**
74–78	**FH86**
79–84	**FH87**
85–92	**FH88**
93–101	**FH89**
102–110	**FH90**
111–122	**FH91**
123–129	**FH92**
130–133	**FH93**
—	**FH94**

Open Starter Ambient Compensated Overload Relay	Heater Catalog Number ②
Size 5 and 320A with 300/5 Current Transformers	
107–117	**FH23**
118–129	**FH24**
130–141	**FH25**
142–155	**FH26**
156–170	**FH27**
171–187	**FH28**
188–205	**FH29**
206–224	**FH30**
225–244	**FH31**
245–263	**FH32**
264–292	**FH33**
293–318	**FH34**
319–350	**FH35**
Size 6 and 540A with 600/5 Current Transformers	
236–259	**FH24**
260–283	**FH25**
284–310	**FH26**
311–340	**FH27**
341–374	**FH28**
375–411	**FH29**
412–448	**FH30**
449–489	**FH31**
490–527	**FH32**
528–585	**FH33**
586–600	**FH34**

Replacement Parts

Vacuum Contactor—Replacement Coils

Description	Suffix	Part Number
Size 4		
110/120 Vac, 50/60 Hz	**J**	**9085A57G01**
220/240 Vac, 50/60 Hz	**K**	**9085A57G02**
380/415 Vac, 50/60 Hz	**H**	**ID89221G07**
440/480 Vac, 50/60 Hz	**U**	**9085A57G03**
Size 5		
110/120 Vac, 50/60 Hz	**J**	**7874A09G01** ③
220/240 Vac, 50/60 Hz	**K**	**7874A09G04** ④
380/415 Vac, 50/60 Hz	**H**	**7874A09G10**
440/480 Vac, 50/60 Hz	**U**	**7874A09G05**
Size 6		
110/120 Vac, 50/60 Hz	**J**	**7874A24G01** ③
220/240 Vac, 50/60 Hz	**K**	**7874A24G02** ④
380/415 Vac, 50/60 Hz	**H**	**7874A24G07**
440/480 Vac, 50/60 Hz	**U**	**7874A24G03**

Notes

① Motor full load current in amperes for use with three heaters only.
② Three are required per overload relay.
③ 125 Vdc can be directly applied to the Size 5 and 6 coil rated for 120 Vac/60 Hz (cannot be applied to Size 4).
④ 250 Vdc can be directly applied to the Size 5 and 6 coil rated for 240 Vac/60 Hz (cannot be applied to Size 4).

Technical Data and Specifications

NEMA, Special Purpose and Mining Rating

	NEMA			Special Purpose			
Description	**Size 4 V201K4_**	**Size 5 V201K5_**	**Size 6 V201K6_**	**160A V201KR_**	**320A V201KT_**	**540A V201KV_**	**610A V201KZ_**
Poles	3	3	3	3	3	3	3
Maximum voltage rating	600V	600V	600V	1500V	1500V	1500V	1500V
Ampere rating	135A	270A	540A	160A	320A	540A	610A
Frequency, Hz	50/60	50/60	50/60	50/60	50/60	50/60	50/60
Maximum closing current	1600A	3000A	6000A	1600A	3000A	6000A	6000A
Maximum interrupting current	1600A	3000A	6000A	1600A	3000A	6000A	6000A
Short time current							
1 second	2400A RMS	4500A RMS	9000A RMS	2400A RMS	4500A RMS	9000A RMS	9000A RMS
2 second	1600A RMS	3000A RMS	6000A RMS	1600A RMS	3000A RMS	6000A RMS	6000A RMS
Dielectric strength	2200 Vac	5375 Vac	5375 Vac	2200 Vac	5375 Vac	5375 Vac	5375 Vac
Maximum allowable interrupting	1200/Hr.	—	—	1200/hr.	—	—	—
Impulse voltage (1 x 40 ms)	15 kV	15 kV	15 kV	15 kV	15 kV	15 kV	15 kV
Maximum motor hp at:							
200V	40 hp	75 hp	150 hp	50 hp	100 hp	150 hp	200 hp
230V	50 hp	100 hp	200 hp	60 hp	125 hp	200 hp	200 hp
380V	75 hp	150 hp	300 hp	100 hp	200 hp	300 hp	300 hp
460V	100 hp	200 hp	400 hp	125 hp	250 hp	400 hp	450 hp
575V	100 hp	200 hp	400 hp	150 hp	300 hp	400 hp	500 hp
800V	—	—	—	200 hp	400 hp	—	800 hp
1000V	—	—	—	250 hp	—	—	1000 hp
1500V	—	—	—	400 hp	800 hp	1300 hp	1600 hp
Three-phase capacitive switching (kVAR):							
230V	0 kVAR	80 kVAR	160 kVAR	50 kVAR	80 kVAR	160 kVAR	176 kVAR
460V	80 kVAR	160 kVAR	320 kVAR	100 kVAR	160 kVAR	320 kVAR	356 kVAR
600V	100 kVAR	200 kVAR	400 kVAR	125 kVAR	200 kVAR	400 kVAR	400 kVAR
1500V	—	—	—	205 kVAR	500 kVAR	—	1000 kVAR
Transformer switching (kVA) ① single-phase, two-pole:							
120V	6.8 kVA	14 kVA	27 kVA	8 kVA	14 kVA	27 kVA	27 kVA
240V	14 kVA	27 kVA	54 kVA	16 kVA	27 kVA	54 kVA	54 kVA
480V	27 kVA	54 kVA	108 kVA	32 kVA	54 kVA	108 kVA	108 kVA
600V	34 kVA	68 kVA	135 kVA	40 kVA	68 kVA	135 kVA	135 kVA
Three-phase, three-pole:							
240V	23 kVA	47 kVA	94 kVA	27 kVA	47 kVA	94 kVA	94 kVA
480V	47 kVA	94 kVA	188 kVA	55 kVA	94 kVA	188 kVA	188 kVA
600V	59 kVA	117 kVA	234 kVA	70 kVA	117 kVA	234 kVA	234 kVA

Note

① For transformers having inrush currents of not more than 20 times the rated full load current.

Electrical Characteristics—NEMA and Special Purpose Types

Description	Size 4 (160A)	5 (320A)	6 (540A and 610A)
DC coil data—burden: (AC supply rectified)			
Open VA	300 VA	500 VA	1450 VA
Closed VA	30 VA	25 VA	32 VA
Closed watts	6W	20W	30W
Pick-up volts	70% of rated coil volts	70% of rated coil volts	70% of rated coil volts
Drop-out volts	50% of rated coil volts	50% of rated coil volts	50% of rated coil volts
Pick-up time in Hz	1.5–2 Hz	1.5–2 Hz	1.5–2 Hz
Drop-out time in Hz	6–6.15 Hz	6–6.15 Hz	6–6.15 Hz
Maximum voltage rating	600V	600V	600V
Maximum closing current	1600A	3000A	6000A
Maximum interrupting current	1600A	3000A	6000A
Short time current:			
1 second	2400A RMS	4500A RMS	9000A RMS
2 second	1600A RMS	3000A RMS	6000A RMS

Electrical Characteristics Coil Data (AC Supply Rectified)

Burden	Size 4 (160A)	Size 5 (320A)	Size 6 (540A and 610A)
Inrush VA	300	600	1700
Sealed VA	30	20	28
Sealed watts	6	20	28
Pick-up volts	70% of rated coil volts	70% of rated coil volts	70% of rated coil volts
Drop-out volts	50% of rated coil volts	50% of rated coil volts	50% of rated coil volts
Pick-up time in Hz	1.5–2	1.5–2	1.5–2
Drop-out time in Hz	6–7.5	6–6.15	6–6.15

Wiring Diagrams

Size 4 Contactor

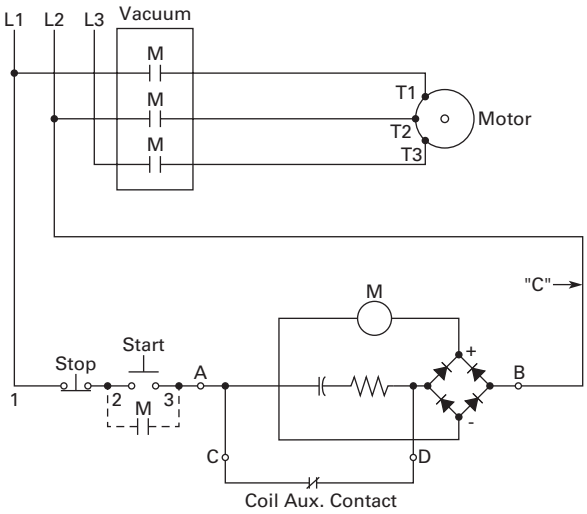

Sizes 5 and 6 Starter

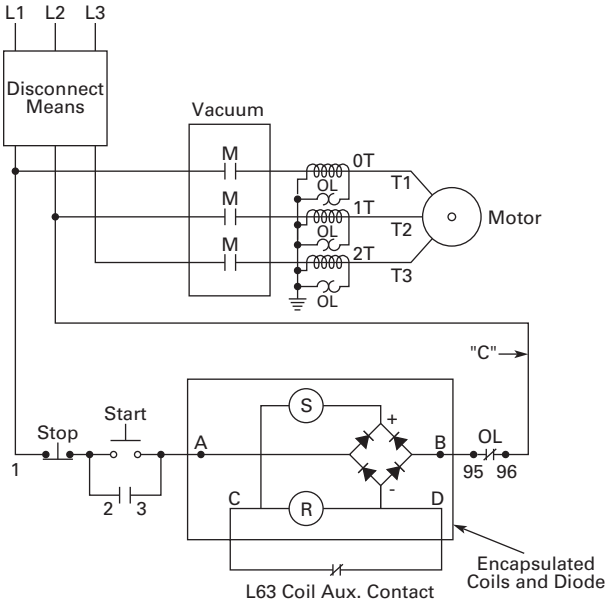

Dimensions

Approximate Dimensions in Inches (mm)

Open Type Contactors and Starters—Size 4 and 160A

Size and 160A Non-Reversing Contactor

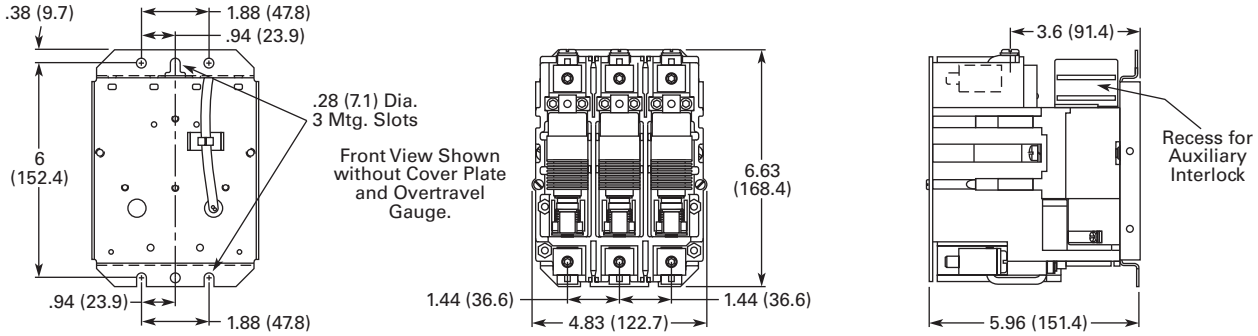

Rear View — Drilling Plan | Front View | Side View

Size 4 and 160A Reversing Contactor

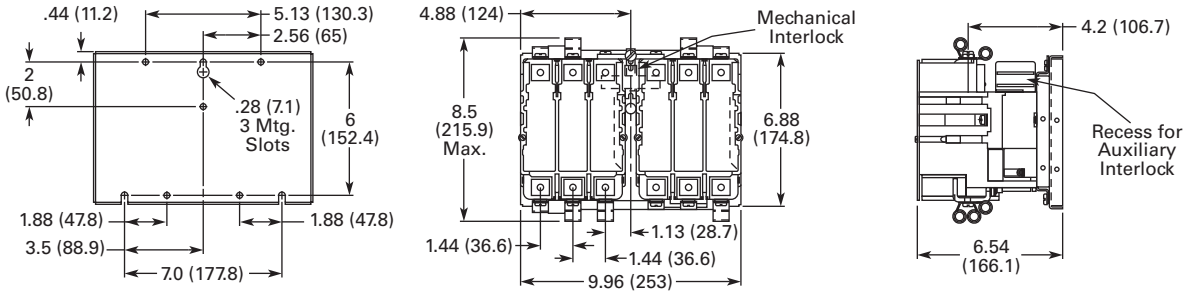

Rear View — Drilling Plan | Front View | Side Vew

Size 4 Non-Reversing Starter

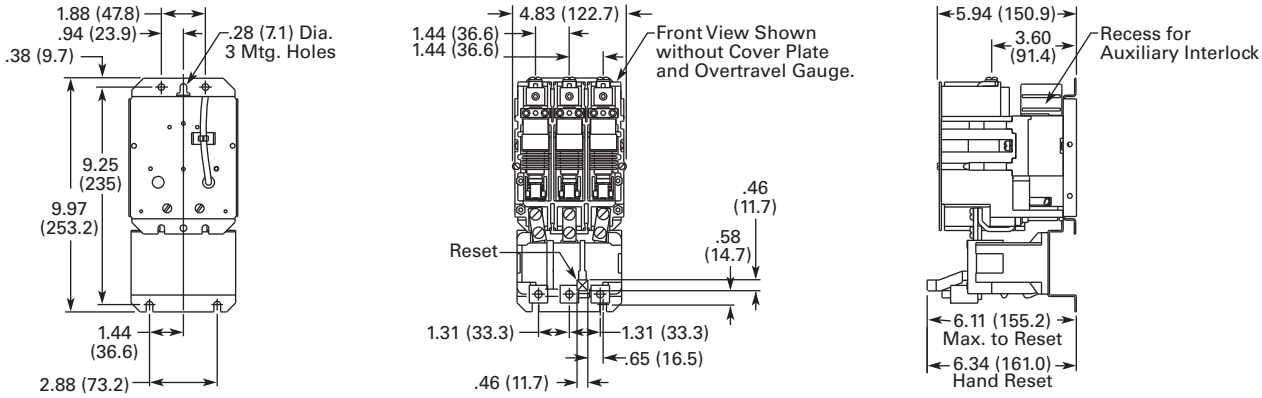

Rear View — Drilling Plan | Front View | Side Vew

Approximate Dimensions in Inches (mm)

Open Type Contactors and Starters—Size 4 and 160A, continued

Size 4 Reversing Starter

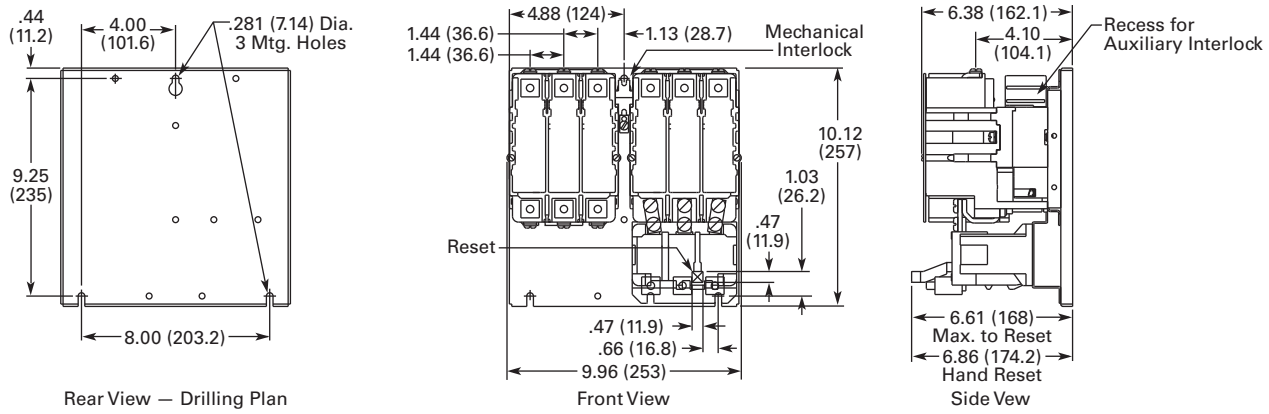

Open Type Contactors and Starters—Size 5 and 320A

Size 5 and 320A Non-Reversing Contactor

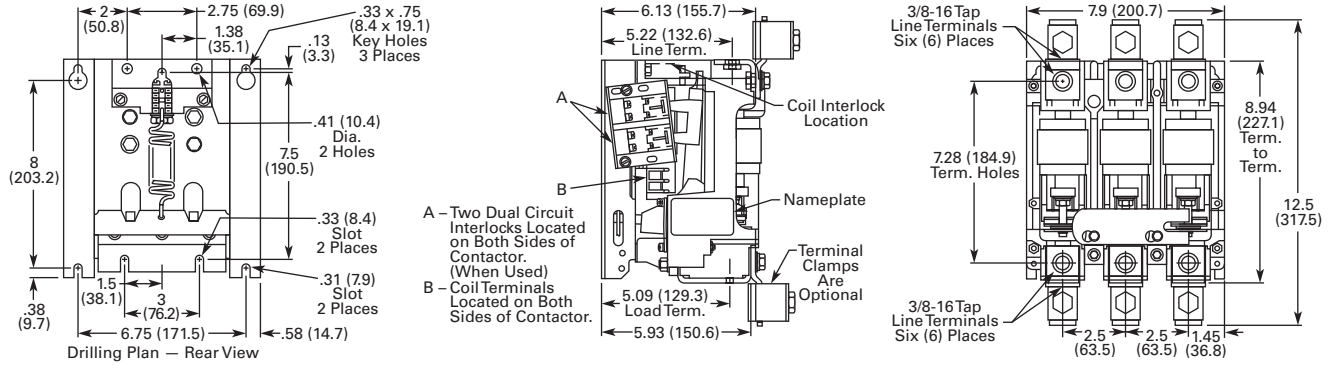

Size 5 and 320A Reversing Contactor

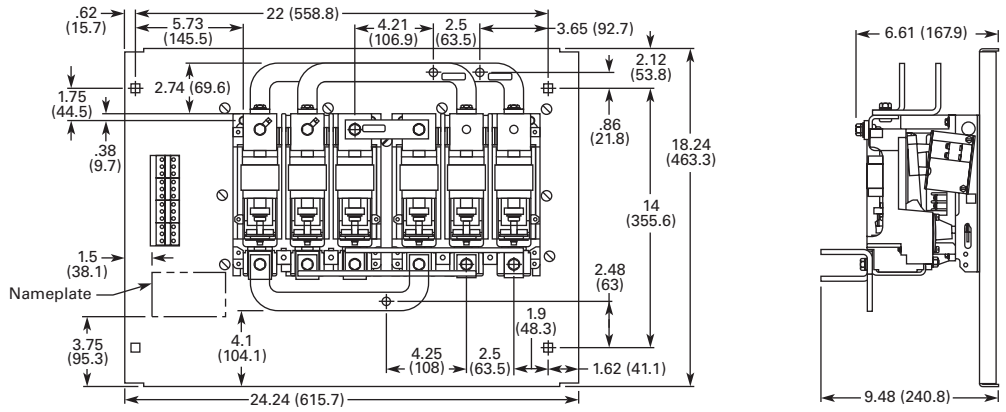

Approximate Dimensions in Inches (mm)

Open Type Contactors and Starters—Size 5 and 320A, continued

Size 5 and 320 Non-Reversing Starter

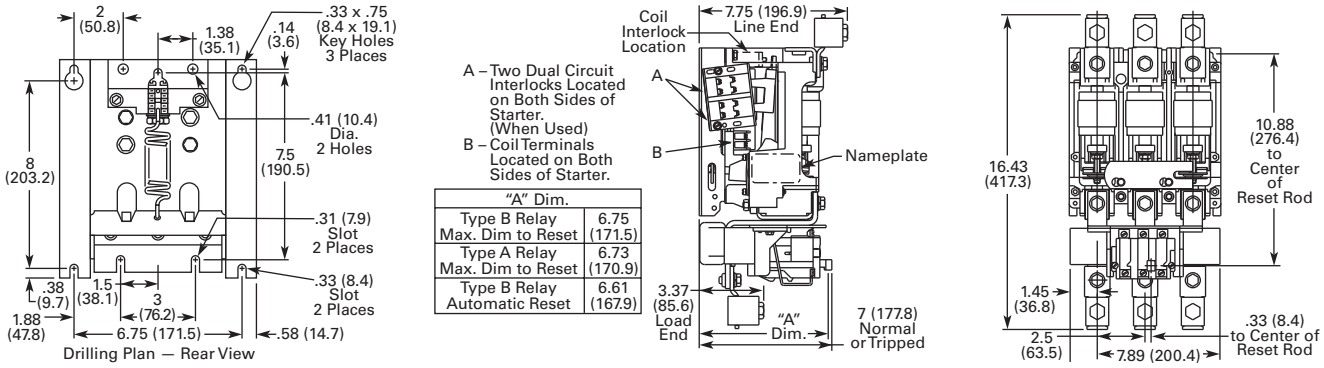

"A" Dim.	
Type B Relay Max. Dim to Reset	6.75 (171.5)
Type A Relay Max. Dim to Reset	6.73 (170.9)
Type B Relay Automatic Reset	6.61 (167.9)

320 Reversing Starter

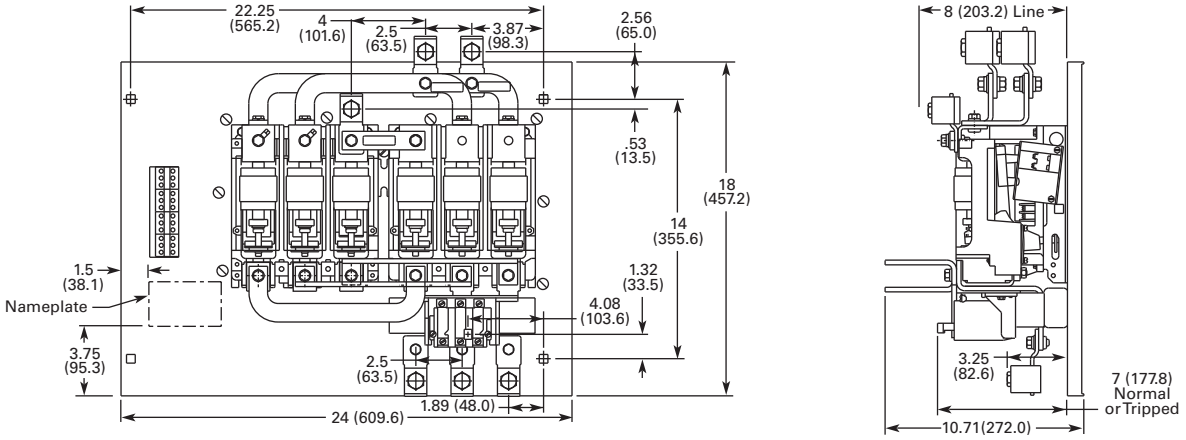

Approximate Dimensions in Inches (mm)

Open Type Contactors and Starters—Size 6, 540A and 610A

Size 6, 540A and 610A Non-Reversing Contactor

A—Two Dual Circuit Interlocks Located on Both Sides of Contactor. (When Used)
B—Coil Terminals Located on Both Sides of Contactor.

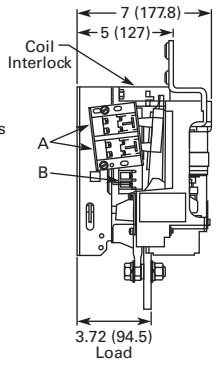

Side Vew

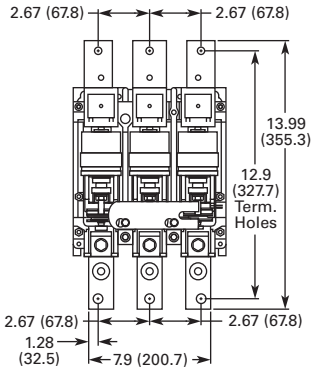

Front View

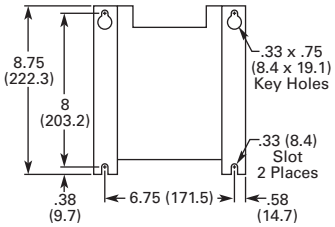

Rear View—Drilling Plan

Size 6, 540A and 610A Reversing Contactor

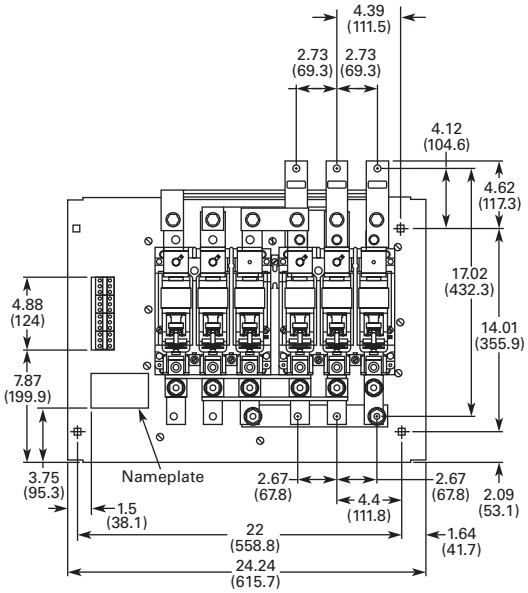

Front View

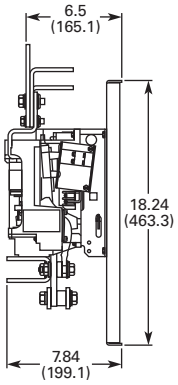

Side View

Approximate Dimensions in Inches (mm)

Open Type Contactors and Starters—Size 6, 540A and 610A, continued

Size 6 and 540A Non-Reversing Starter

A—Two Dual Circuit Interlocks Located on Both Sides of Starter. (When Used)
B—Coil Terminals Located on Both Sides of Starter.

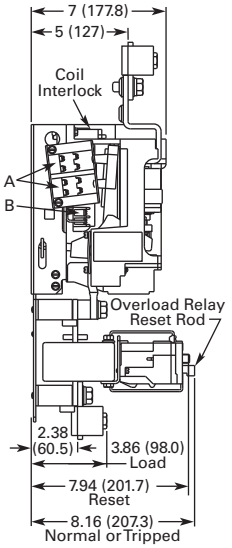

Side View

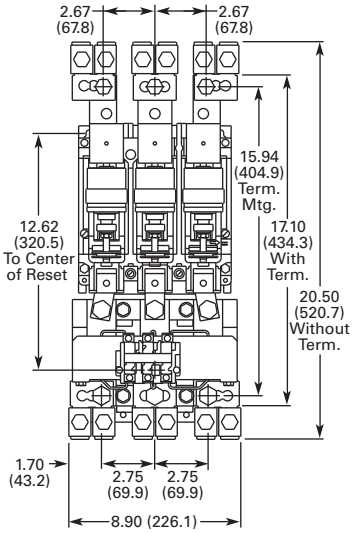

Front View

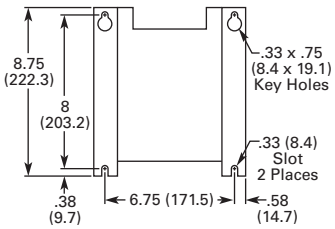

Rear View—Drilling Plan

540A Reversing Starter

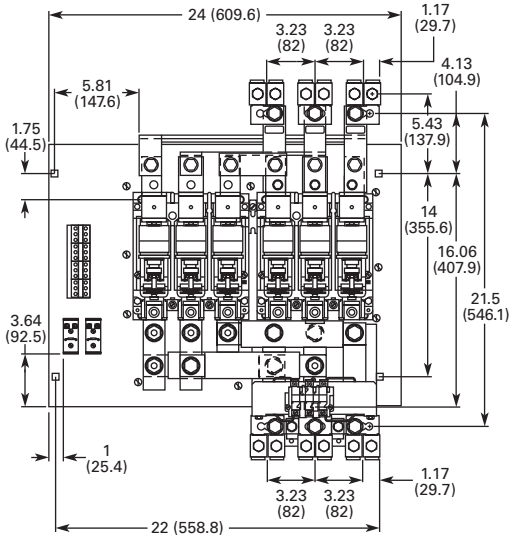

Front View

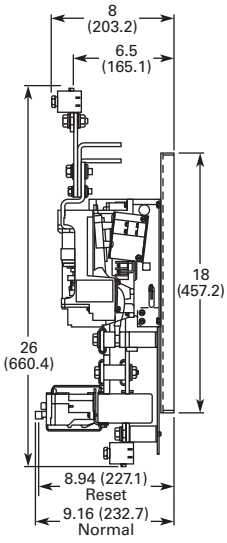

Side View