Powering Business Worldwide

Carter® Brand

Product News Bulletin

PN554050105

Original release: May 1, 2005 – Revised Nov. 2, 2012

APPLICABLE TO ALL 4 INCH API CARTER HYDRANT VALVES

There has been some confusion with the effective serial numbers on our 60554 and 61654 Hydrant Valves regarding their compliance to EI 1584, third edition. Please use the serial numbers listed below as the most current available.

60554 Hydrant Valve:

S/N 101 to S/N 8452 – Most of these valves were built with both the upper and lower housing made of Ductile Iron. Only a few were made with a special Stainless Steel upper housing. – All of these valves only require replacement of the Poppet in the upper housing.

S/N 8453 to S/S 11160 – Most of these valves were built with the earliest version of a two-piece upper housing (aluminum body with a stainless steel ring). These are easily recognized by looking at the flange where the upper housing is bolted to the lower housing and note that the bolts & washers **DO NOT** sit into a countersink in the flange of the upper housing. To comply to EI 1584, 3rd Edition these valves need to have the entire upper housing replaced. Again, any valves within this series that has a Ductile Iron (either 1-piece or 2-piece housing) or a valve with a 1-piece Stainless Steel housing only require replacement of the Poppet.

S/N 11161 to 12206 - Most of these valves were built with the newest version of a two-piece upper housing (aluminum body with a stainless steel ring). These are easily recognized by looking at the flange where the upper housing is bolted to the lower housing and note that the bolts & washers **DO** sit into a countersink in the flange of the upper housing. To comply to EI 1584, 3rd Edition these valves only need the Poppet in the upper housing to be replaced. Again, any valves within this series that has a Ductile Iron (either 1-piece or 2-piece housing) or a valve with a 1-piece Stainless Steel housing only require the replacement of the Poppet.

S/Ns above 12207 – These valves were built to comply to EI 1584, 3rd Edition and **DO NOT** require any modifications.

61654 Hydrant Valve:

S/N 10 to S/N 1019 – Most valves were built with both the upper and lower housing made of Ductile Iron. Only a few were made with a special Stainless Steel upper housing. – All of these valves only require the replacement of the Poppet in the upper housing.

S/N 1020 to S/S 1247 – Most of these valves were built with the earliest version of a two-piece upper housing (aluminum body with a stainless steel ring). These are easily recognized by looking at the flange where the upper housing is bolted to the lower housing and note that the bolts & washers **DO NOT** sit into a countersink in the flange of the upper housing. To comply to EI 1584, 3rd Edition these valves need to have the entire upper housing replaced. Again, any valves within this series that has a Ductile Iron (either 1-piece or 2-piece housing) or a valve with a 1-piece Stainless Steel housing only require the replacement of the Poppet.

S/N 1248 to 1288 - All of these were either "K" Option Valves which were built for Newark Int'l Airport and already meet EI 1584, 3rd Edition.

S/Ns above 1289 – These valves were built to comply to EI 1584, 3rd Edition and **DO NOT** require any modifications.

Original release of this bulletin follows:

NEW POPPET ASSEMBLY MEETS LATEST API SPEC

The 3rd edition of API 1584 requires that hydrant valves be designed and tested to show that they meet certain “break-a-way” strengths. Most Carter hydrant valves in production at the time of the test were tested to this requirement and were found to meet the requirements except for the poppet. That is the main structure of the hydrant valve successfully exhibited break-a-way characteristics in excess of those in the specification. During testing the weakest link in the design was found to be in the poppet. The requirement was an addition to the specification and thereby required design improvements. As it happened, a high strength steel poppet (original one was aluminum) was already used in some options of the 61654.This poppet was tested and found to meet the specification. Hence all 60554 and 61654 shipped with serial numbers 11161 and 1289 respectively and subsequent include the product improvement using the steel poppet design. To achieve the strength requirements of the latest API 1584 Specification, earlier hydrants should be updated. This Product News outlines the parts and instructions needed to update older unit.

60554 4”x4”
Hydrant Valve

61654 4”x6”
Hydrant Valve

60554 4”x4” API Hydrant Valves – Serial Numbers 11161 & subsequent – These hydrants were shipped in accordance with the 3rd Edition of API 1584 and no further action is needed.

61654 4”x6” API Hydrant Valves – Serial Numbers 1289 & subsequent –These hydrants were shipped in accordance with the 3rd Edition of API 1584 and no further action is needed. If you cannot find the serial number the differences between the older and newer valves with two-piece upper halves can be easily identified by its appearance and magnetic properties. The steel parts (the two major parts in the assembly items 11 Poppet and 16 Shroud in Figure 1 on the next page are magnetic and are electroless nickel plated resulting in a bright shiny surface compared to a dull gray color for the aluminum. The flange of the two-piece upper half on valves shipped in accordance to the 2nd Edition will also be different from those that meet the latest requirements. The bolts (item 5) that hold the upper half to the lower half will bear on a flat upper surface for the former units. The bolt holes on the later units are counter-bored in a thicker flange on the units that are in accordance with the latest specification.

60554 -Serial Numbers 101 through 8453 & 61654 Serial Numbers 10 through 1019

These valves were shipped form Carter with a ductile iron or stainless steel upper housing assembly with an aluminum poppet. The housing structurally meets the 3rd Edition requirements. Hence only the poppet and mating parts need replacing to upgrade to the latest requirements. **KD60554-10** should be ordered. It contains the new improved steel poppet and all seals and attaching parts needed.

Replacement Instructions (item numbers are from the Figure 1).

1. Place the unit in a container sufficiently large enough to contain a minimum of 5 gallons (19 l) of fuel. Remove the Cover Assy (23). Push the Adapter Poppet (11) open and hold it open with a flexible plastic rod, or another non-marring item, to

allow the unit to drain. Hint: A scrap 23620 Rod used in Carter 60427 Nozzle is suitable for this job. Turn the unit over onto its outlet, being sure to place it on a surface that will not damage the outlet surfaces. Grasp the inlet flange and apply pressure to the piston to push it open sufficiently to insert a flexible plastic rod to keep the piston open as with the Adapter Poppet
(11) above. Turn the valve over a few times to allow the trapped fuel to drain. The rods can then be removed to close the piston and adapter poppet.

2. Remove Screws (3 & 5) and Washers (4). Note that Screw (5) is shorter than Screws (3). It should be noted that it was installed in the hole to the left of the various Pilot Valves when facing the unit with the Pilot Valve directly in the center. Note that on newer units this shorter Screw (5) is made of stainless steel, for ease of identification only, instead of the normal cadmium plated Screws (3).

3. Using a thin, wide blade screwdriver, gently pry the Upper Half Assy (6) from the Lower Half Assy. Be careful not to damage the epoxy coating. Remove and discard O-ring (22).

4. Reassemble using parts from KD60554-10.

60554 -Serial Number 8454 through 11160 & **61654 Serial Numbers between 1020 and 1288 (except those with option K) –**

The original aluminum/stainless steel upper half assembly was designed and tested to the 2nd Edition of API 1584 and met that specification. Hence to meet the 3rd Edition requirements it is necessary to also upgrade not only the poppet assembly but to also update the two-piece upper half assembly. (Note — any hydrants with all stainless steel or ductile iron upper halves need only follow the upgrade instructions for valves with serial numbers 8453 for 60554 and 1019 for 61654 and lower as noted above). **KD60554-9** should be ordered to upgrade the entire valve to meet the design change revised by the 3rd Edition.
Replacement Instructions (item numbers are from the Figure 2 on page 3).

1. Follow the instructions given in paragraph 1.0 - 3.0 above.
2. Discard the upper half assembly and replace it during reassembly with the new upper half furnished in the kit. Refer to Figure 2
3. Reassemble in reverse order replacing the appropriate parts furnished in KD60554-9. Note that Screw (5) is shorter than Screws (3). It should be noted that it was installed in the hole to the left of the various Pilot Valves when facing the unit with the Pilot Valve directly in the center.

This is the time to also consider overhauling the entire valve by ordering the appropriate kit from Table 9 SM60554 to match the type of hydrant.

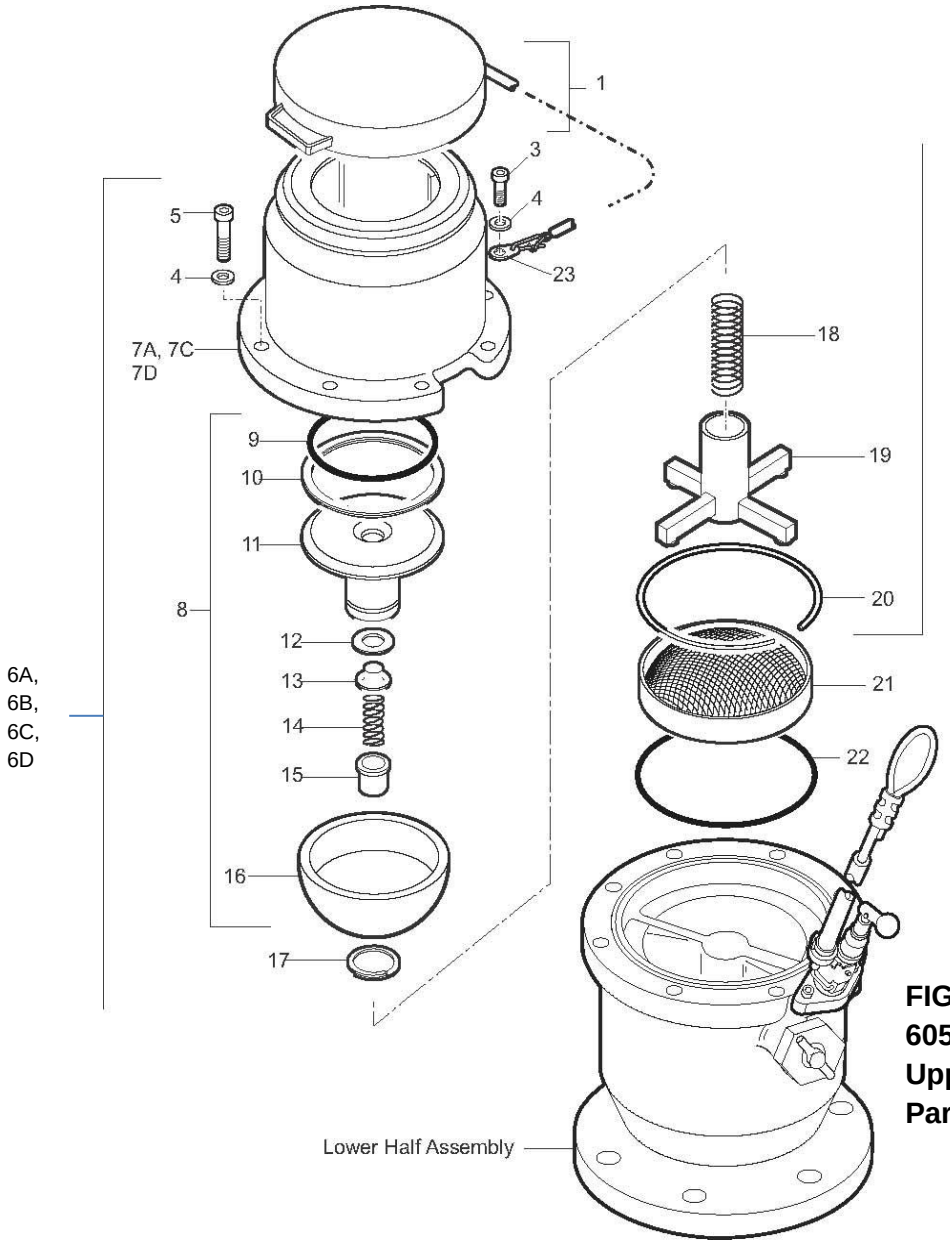

FIGURE 1
60554 & 61654
Upper Half Assembly
Parts Breakdown
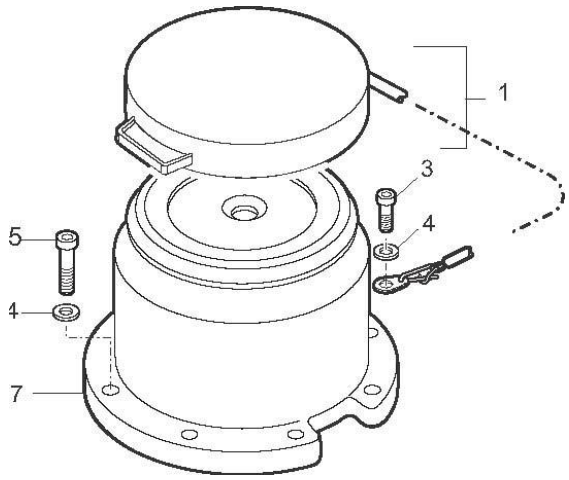
FIGURE 2
60554 & 61654
Upper Half Assembly