Carter® Ground Fueling

Emergency Breakaway Coupling — 7 inch

Model 64191

Powering Business Worldwide

Design Concepts

Eaton's Carter brand emergency breakaway fuel coupling was developed in conjunction with the Canadian Navy during their search to eliminate fuel spillage at sea. This coupling meets or exceeds all the requirements of the new NATO replenishment at sea coupling specification and is the proposed replacement for the existing NATO "A/B" breakable spool. The Eaton emergency breakaway fuel coupling is designed to be used with abeam, astern "lay on deck" and with Hudson Reel standard 6 or 7 inch hose. When a pulling force of approximately 1100 pounds (5 kN) is applied, the probe will automatically disconnect and dry break on both sides with less than 100cc of fuel spillage. However, the probe, which weighs less than 35.38 kg (78 lbs), is easily connected or disconnected by one person without the need for special tools.

Features

- Replacement for a/b breakaway spool
- Provides dry breakaway under load
- Breakaway force of 5.1 kN (1137 lb)
- Can be reconnected without tools or re-setting procedure
- Dry break feature. Both halves seal automatically with maximum fuel spillage — 100cc
- Easily disconnected (manually) with internal vacuum present
- Constructed of anodized aluminum and stainless steel and is compatible with jet fuel, av gas and diesel fuels and marine environment
- Seals compatible with all NATO fuels
- Use with 6 or 7 inch hose
- Pressure drop — 0.56 bar at 567.8 cum/hr (8.2 psid at 2,500 US gpm)
- Weight, fueling probe (with environment cap) — 35.3kg (78.0 lb) max
- Temperature range — passed test to -20ºC (-4ºF). Designed temperature range -40ºC (-40ºF) to 75ºC (165ºF)
- Maximum working flow — tested to 567.8 cum/hr (2,500 US gpm)
- Maximum working pressure – 150 psig
- Test pressure — 300 psig
- Maximum velocity — 6.3 m/sec (20.8 ft/sec)
- Astern cone available (see photo, right)

Model 64191-1 Probe

Shown with astern cone (option E)

Envelope Dimensions

Dimensions shown in inches
(millimeters)

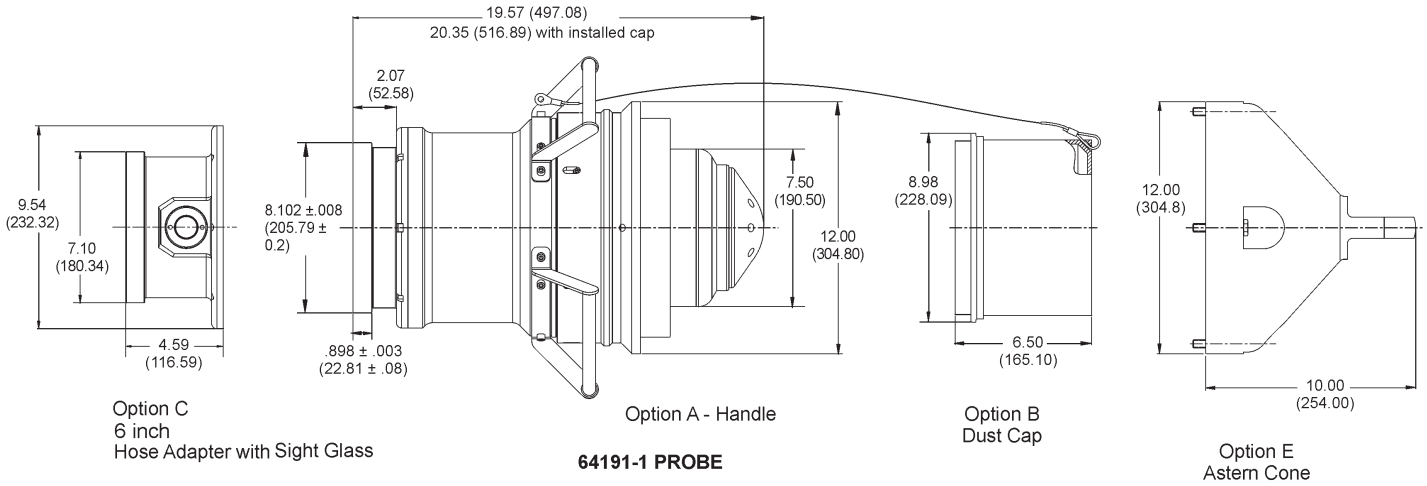

64191-1 PROBE

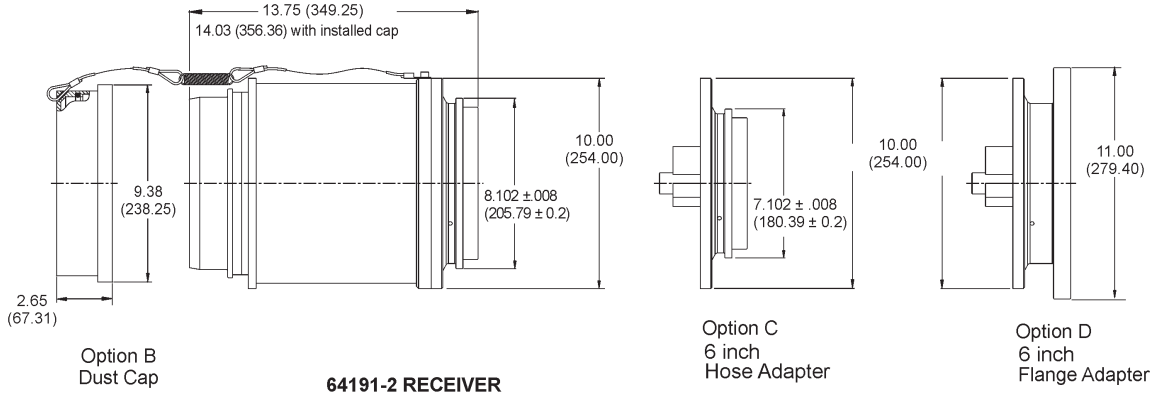

64191-2 RECEIVER

Eaton
Aerospace Group
Conveyance Systems Division
671 W. 17th Street
Costa Mesa, California 92627
Phone: (949) 764-2200
Fax: (949) 631-2673

Eaton Corporation
Aerospace Group
Conveyance Systems Division
90 Clary Connector
Eastanollee, Georgia 30538
Phone: (706) 779-3351
Fax: (706) 779-2638

Eaton Corporation
Aerospace Group
Conveyance Systems Division
300 South East Avenue
Jackson, Michigan 49203-1972
Phone: (517) 787-8121
Fax: (517) 787-5758

Eaton Corporation
Aerospace Group
Conveyance Systems Division
11642 Old Baltimore Pike
Beltsville, Maryland 20705
Phone: (301) 937-4010

Eaton Corporation
Aerospace Group
Conveyance Systems Division
15 Pioneer Ave.
Warwick, Rhode Island 02888
Phone: (401) 781-4700

Eaton S. A.
Aerospace Group
Conveyance Systems Division
2 Rue Lavoisier BP 54 78310
Coignieres, France
Phone: (33) 1-30-69-3000

Eaton LTD
Aerospace Group
Conveyance Systems Division
Broad Ground Road
Lakeside
Redditch
Worcs B98 8YS
England
Phone: (44) 152-751-7555
Fax: (44) 152-751-7556

Eaton LTD
Aerospace Group
Conveyance Systems Division
Chemin De Pau
64121 Serres-Castet
France
Phone: (33) 559-333-864
Fax: (33) 559-333-865

Eaton LTD
Aerospace Group
Conveyance Systems Division
Posttach 1026
Carl-Benz Strasse 9
D-82205 Gilching
Germany
Phone: 49 (0) 8105-750
Fax: 49 (0) 8105-7555

Vickers Systems Pte Ltd
Aerospace Group
Conveyance Systems Division
Lot 512, Jalan Delima,
Batamindo
Industrial Park
Batam 29433, Indonesia
Phone: (62) 611823

Eaton LTD
Aerospace Group
Conveyance Systems Division
Chemin De Pau
64121 Serres-Castet
France
Phone: (33) 559-333-864
Fax: (33) 559-333-865

Powering Business Worldwide

Eaton Corporation
Aerospace Group
9650 Jeronimo Road
Irvine, California 92618
Phone: (949) 452-9500
Fax: (949) 452-9555
www.eaton.com/aerospace

©2009 Eaton
All Rights Reserved
Printed In USA
Form No. TF100-99
February 2009