EATON | Vickers

Proportional Directional Valves, Two-Stage

K(A)FDG5V-5/7/8, 1*/3* Series, with Main-Stage Feedback Transducers
K(A)HDG5V-5/7/8, 2* Series, with Pilot and Main-Stage Feedback Transducers
ISO 4401-05, 07 and 08 (ANSI/NFPA-D05, D07 and D08)

Typical cross section
KHDG5V-7

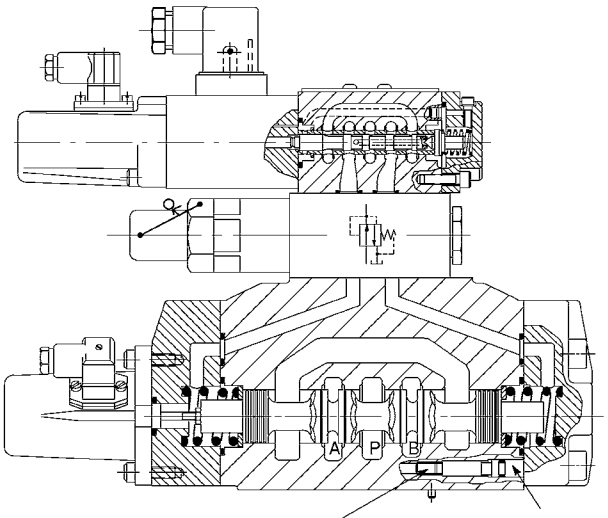

M6 x 8mm plug part no. 471131. size 7 only. Remove for internally piloted models

M5 internal thread for removal of closure plug

General Description

Vickers proportional valves shown in this catalog are suitable for working pressures up to 350 bar (5070 psi) and flow rates up to 300 L/min (79 US gpm).

They are designed to provide a controlled oil flow in proportion to a command signal, with spool position feedback to provide accurate speed control. Hydrostats are available for load compensation on sizes 7 and 8.

Additionally, these valves can be supplied with or without an integral amplifier built directly onto the valve.

KF/HDG5V-5/7/8
This version is supplied without the integral amplifier.

Features and Benefits
- Wide range of spool and flow rate options
- Supported by amplifiers and auxiliary function modules from the Vickers range
- Electronic feedback LVDT ensures accurate speed control
- Current feedback provides inherent protection from electrical interference
- Vibration and shock tested

KAF/HDG5V-5/7/8
A range of proportional directional valves with control amplifiers built directly on, and prewired to, the valves. Factory-set adjustments of gain, spool deadband compensation, dither and offset ensure high repeatability valve-to-valve.

The only electrical inputs required are power supply (24V) and a voltage command signal of ±10V. The amplifier is housed in a robust metal enclosure. Electrical connections are via a standard 7-pin plug.

Two LEDs give status of "Power-on" (green) and LVDT failure indication (red). A monitor point allows the function of the amplifier to be checked. Ramp functions, if required, must be generated externally.

Features and Benefits
- Factory-sealed adjustments increase valve-to-valve accuracy
- Valve and amplifier selected, ordered, delivered and installed as a performance-tested package
- Standard 24V DC supply with wide tolerance band
- Standard ±10V DC command signals
- Installation wiring reduced and simplified
- Standard 7-pin connector
- LED status indication and monitor point help troubleshooting
- Simple valve removal and replacement for service
- Vibration and shock tested
- Supported by auxiliary function modules

CE

This product has been designed and tested to meet specific standards outlined in the European Electromagnetic Compatibility Directive (EMC) 89/336/EEC, amended by 91/263/EEC, 92/31/EEC and 93/68/EEC, article 5. For instructions on installation requirements to achieve effective protection levels, see this leaflet, the Installation Wiring Practices for Vickers Electronic Products leaflet 2468 and leaflet 02-123931A which is packed with every KA valve. Wiring practices relevant to this Directive are indicated by ⚠ Electromagnetic Compatibility (EMC).

VICKERS®

Functional Symbols and Application Notes

Model Types KHDG5V Shown
Simplified symbol

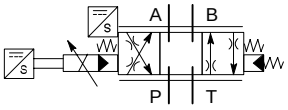

Detailed symbol

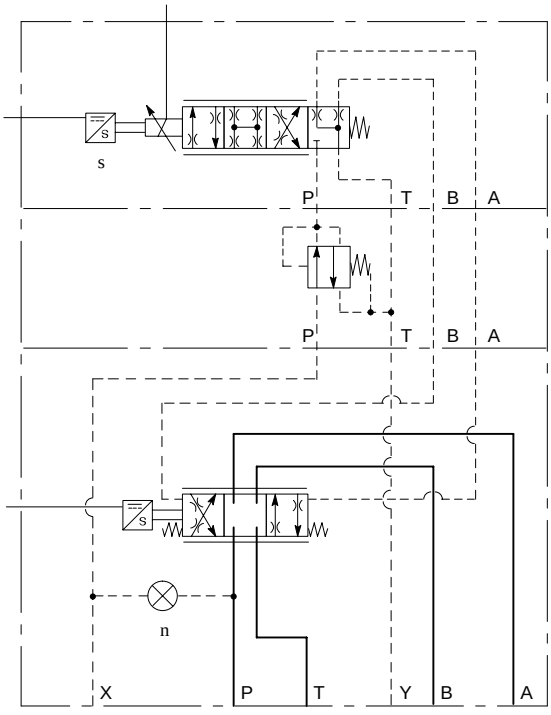

Model Types KAHDG5V Shown
K(A)FDG5V symbols identical, but omit pilot-stage LVDTs
Simplified symbol

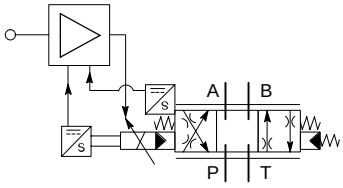

Detailed symbol

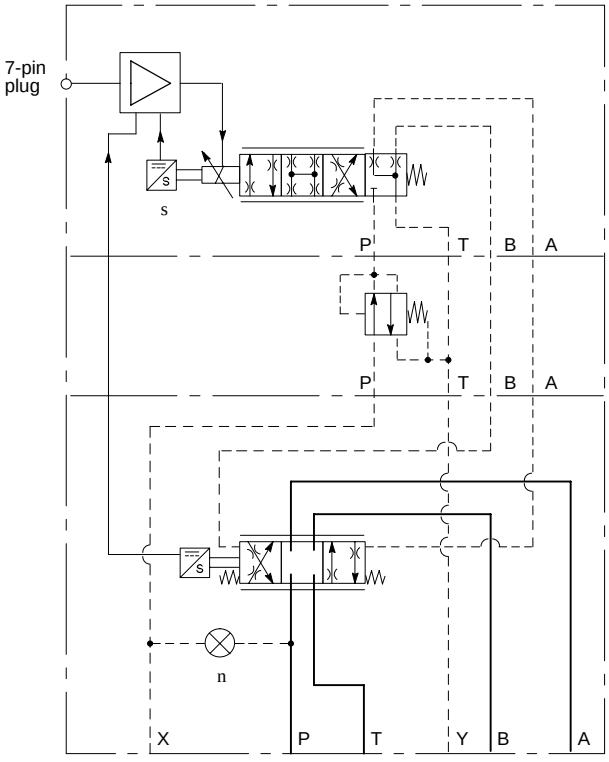

Spool Types

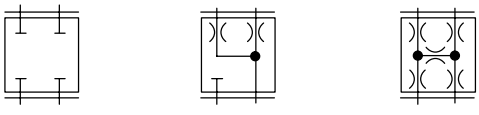

Type 2 Type 33 Type 5

n *See Application Note B, and* 5 *in Model Code on next page.*

Application Notes

A. Main-Spool Options
Spools shown are meter-in/meter-out types. Center-condition options are types 2 and 33.

B. Internally Piloted Models
Differ from detailed symbols above by omission of plug n and the blocking of port X by the mating surface.

Model Code

K(A) * DG5V - * - ** - C - ***** - (E) X - VM - ** - *** - H1 - ****

1 2 3 4 5 6 7 8

---

1 Series type designator

A = Integral amplifier
Omit for non-integral amplifier

2 Feedback arrangement

F = From main stage only
H = From pilot and main stages

3 Mounting size code (ISO 4401)

5 = 05
7 = 07
8 = 08

4 Spool type, flow rating and metering

See “Functional Symbols” on previous page
Δp = 5 bar (72 psi) per metering flow path, e.g. B to T

Symmetric spools

For K*DG5V-**5** valves:
2C100N = 100 L/min (26 US gpm)
33C80N = 80 L/min (21 US gpm)
5C85N = 85 L/min (22 US gpm)

For K*DG5V-**7** valves:
2C200N = 200 L/min (52 US gpm)
33C160N = 160 L/min (42 US gpm)
5C200N = 200 L/min (52 US gpm)

For K*DG5V-**8** valves:
2C300N = 300 L/min (79 US gpm)
33C270N = 270 L/min (71 US gpm)
5C300N = 300 L/min (79 US gpm)

Asymmetric spools

First figure (***N) is flow rating P-A, or A-T (“A” port flow); last figure (N***) is flow rating P-B, or B-T (“B” port flow)

For K*DG5V-**5** valves:
2C70N45 = 70 L/min (18.5 US gpm), “A” port flow
45 L/min (11.9 US gpm), “B” port flow
33C65N40 = 65 L/min (17.2 US gpm), “A” port flow
40 L/min (10.6 US gpm), “B” port flow

For K*DG5V-**7** valves:
2C150N85 = 150 L/min (40 US gpm), “A” port flow
85 L/min (22.4 US gpm), “B” port flow
33C130N65 = 130 L/min (33.3 US gpm), “A” port flow
65 L/min (17.2 US gpm), “B” port flow

For K*DG5V-**8** valves:
2C280N200 = 280 L/min (74 US gpm), “A” port flow
200 L/min (52 US gpm), “B” port flow
33C250N170 = 250 L/min (66 US gpm), “A” port flow
170 L/min (45 US gpm), “B” port flow

5 Pilot supply

EX = External through integral reducer
X = Internal through integral reducer

6 Solenoid electrical connector

U1 = ISO 4400/DIN 43650, non-integral amplifier type only
F = Flying lead, integral amplifier type only

7 Electrical connection (KAF valves only)

PD7 = 7-pin connector with plastic plug.
See Warning note below.

8 Design number

10 series for K(A)FDG5V-7/8 models
20 series for K(A)H models
30 series for K(A)FDG5V-5 models
Subject to change. Installation dimensions unaltered for design numbers *0 to *9 inclusive.

Solenoid and LVDT Plugs

Supplied with valve.

Warning

To conform to the EC Electromagnetic Compatibility directive (EMC) this KA valve must be fitted with a metal 7-pin plug. The screen of the cable must be securely connected to the shell of the metal connector. A suitable IP67 rated connector is available from Vickers, part no. 934939. Alternatively a non IP67 rated connector is available from ITT-Cannon, part no.CA 02 COM-E 14S A7 P.
Additionally the cable must be fitted with a ferrite EMC suppression core not more than 4cm from the connector referred to above. Suitable types include Farnell 535-898 or Farnell 535-904 which snap fit over the cable.
The plastic plug, part number 694534, is only suitable for use in a sealed electromagnetic environment or outside of the European Community.

Operating Data

Performance data is typical with fluid at 36 cSt (168 SUS) and 50°C (122°F) while using the basic Vickers power amplifier.

KF/HDG5V and KAF/HDG5V Valves

Relative duty factor		Continuous rating (ED = 100%)
Hysteresis, with flow through P-A-B-T, Δp = 5 bar (72 psi) per metering path (P-A or B-T):		
KFDG5V		<2%
KHDG5V		<1%
Step input response, with flow through P-A-B-T, Δp = 5 bar (72 psi) per metering path, e.g. P-A		
Required flow step:		Time to reach 90% of required step:
K(A)FDG5V-5	0 to 100%	30 ms (0.030s)
	100% to 0	24 ms (0.024s)
	+90 to –90%	34 ms (0.034s)
K(A)FDG5V-7	0 to 100%	50 ms (0.050s)
	100% to 0	54 ms (0.054s)
	+90 to –90%	61 ms (0.061s)
K(A)FDG5V-8	0 to 100%	67 ms (0.067s)
	100% to 0	56 ms (0.056s)
	+90 to –90%	75 ms (0.075s)
K(A)HDG5V-5	0 to 100%	24 ms (0.024s)
	100% to 0	23 ms (0.023s)
	+90 to –90%	35 ms (0.035s)
K(A)HDG5V-7	0 to 100%	24 ms (0.024s)
	100% to 0	23 ms (0.023s)
	+90 to –90%	36 ms (0.036s)
K(A)HDG5V-8	0 to 100%	37 ms (0.037s)
	100% to 0	36 ms (0.036s)
	+90 to –90%	57 ms (0.057s)
Mass		
KFDG5V-5		9,50 kg (20.9 lb) approx.
KAFDG5V-5		9,90 kg (21.8 lb)approx.
KFDG5V-7		10,75 kg (23.7 lb) approx.
KAFDG5V-7		11,15 kg (24.6 lb) approx.
KFDG5V-8		18,00 kg (39.7 lb) approx.
KAFDG5V-8		18,40 kg (40.6 lb) approx.
KHDG5V-5		9,75 kg (21.5 lb) approx.
KAHDG5V-5		10,15 kg (22.4 lb) approx.
KHDG5V-7		11,00 kg (24.2 lb) approx.
KAHDG5V-7		11,40 kg (25.1 lb) approx.
KHDG5V-8		18,25 kg (40.2 lb) approx.
KAHDG5V-8		18,65 kg (41.1 lb) approx.
Installation and start-up		See “Further Information”

KF/HDG5V Valves	
Max. current, at 50°C (122°F) ambient	2,7A
Standing current, pilot valve at null: KFDG5V KHDG5V	 1,4A 1,6A
Coil resistance, at 20°C (68°F): KFDG5V KHDG5V	 2,8Ω 1,7Ω
Electrical plugs, supplied with valve	See “Installation Dimensions”

KAF/HDG5V Valves	
Power supply	24V DC (21V to 36V including 10% peak-to-peak max. ripple) max. current 3A
Command signal Input impedance	0 to +10V DC, or 0 to –10V DC, or –10V to +10V DC 47 kΩ
7-pin plug connector Pin connections: A B C D E F G	 Power supply +ve Power 0V Signal 0V +ve voltage command signal –ve voltage command signal Monitor output Protective ground
Electro-magnetic compatibility (EMC): Emission Immunity See “Important” note regarding EMC, five pages on	 EN 50081-2 EN 50082-2
Gain adjustment	25 to 125%
Zero adjustment	±18%
Factory-set adjustments	Deadband, gain, dither and offset
Monitor point signal: Output impedance	±10V for full stroke output stage spool 10 kΩ
Power stage PWM frequency	2 kHz nominal
Repeatability, valve-to-valve (at factory settings): Flow gain at 100% command signal	Optimised by adjustment of deadband compensation, gain and ramp potentiometers on associated Vickers amplifier
Protection: Electrical	 Reverse polarity protected
Relative humidity	85 to 95% at 20 to 70°C (68 to 158°F)
Supporting products: Auxiliary electronic modules (DIN-rail mounting): EHA-CON-201-A-1* signal converter EHA-DSG-201-A-1* command signal generator EHA-RMP-201-A-1* ramp generator EHA-PID-201-A-1* PID controller Subplates, size 05, 07 and 08 Mounting bolts Note: If not using Vickers recommended bolt kits, bolts must be to ISO 898 grade 12.9 or stronger	 See catalog 2410 See catalog 2410 See catalog 2410 See catalog 2410 See catalogs 2336, 2337 and 2338 See catalog 2314

Maximum Pressures, bar (psi)

Model	Pilot Pressure Source	Ports P, A and B	T	X	Y
K(A)FDG5V-7/8	Internal or external	350 (5000) s	350 (5000)	350 (5000) s	4 (58)
K(A)*DG5V-5	External	315 (4500)	210 (3000)	210 (3000) n	4 (58)
	Internal	315 (4500) n	100 (1450)	315 (4500) n	4 (58)
K(A)HDG5V-7/8	Internal or external	350 (5000) n	350 (5000)	350 (5000) n	4 (58)

s *25 (363) min. pressure at X for externally piloted models or at P and X for internally piloted models.*
n *45 (653) min. pressure at X for externally piloted models or at P and X for internally piloted models.*

Minimum Recommended Flow Rates

For spool types 2C and 33C
Δp = 10 bar (145 psi) for looped flow P-A-B-T (or P-B-A-T)

Valve Size/Spool Code	Min. Flow Rate L/min	in^3/min
K(A)FDG5V-5-2C100N	1,0	60
K(A)FDG5V-5-33C80N	1,0	60
K(A)FDG5V-7-2C200N	2,0	121
K(A)FDG5V-7-33C160N	2,0	121
K(A)FDG5V-8-2C300N	3,0	182
K(A)FDG5V-8-33C270N	3,0	182
K(A)HDG5V-5-2C100N	0,5	30
K(A)HDG5V-5-33C80N	0,5	30
K(A)HDG5V-7-2C200N	1,0	60
K(A)HDG5V-7-33C160N	1,0	60
K(A)HDG5V-8-2C300N	1,5	91
K(A)HDG5V-8-33C270N	1,5	91

Power Capacity Envelopes

Flow through P-A-B-T or P-B-A-T

KF models

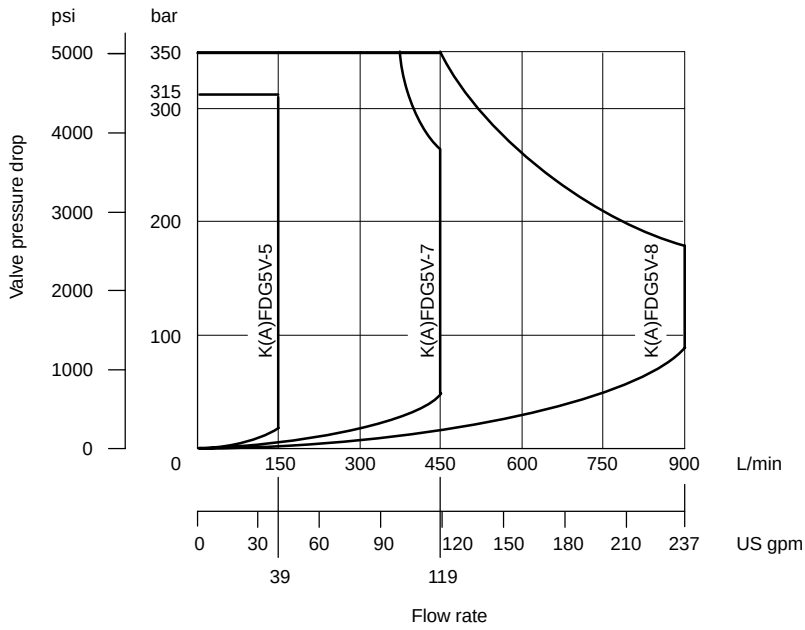

KH models

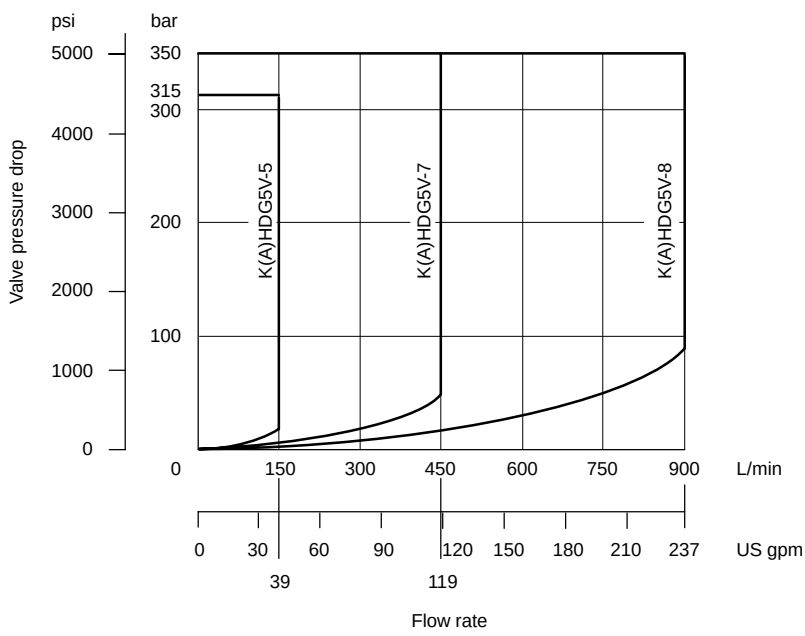

Flow Gain KFDG5V and KHDG5V Models

At Δp = 5 bar (72 psi) per metering path (e.g. P-A) n, with flow through P-A-B-T or P-B-A-T. Percentage command signals applicable for positive and negative values of command signal. See footnote (s) relative to point at which flow starts.

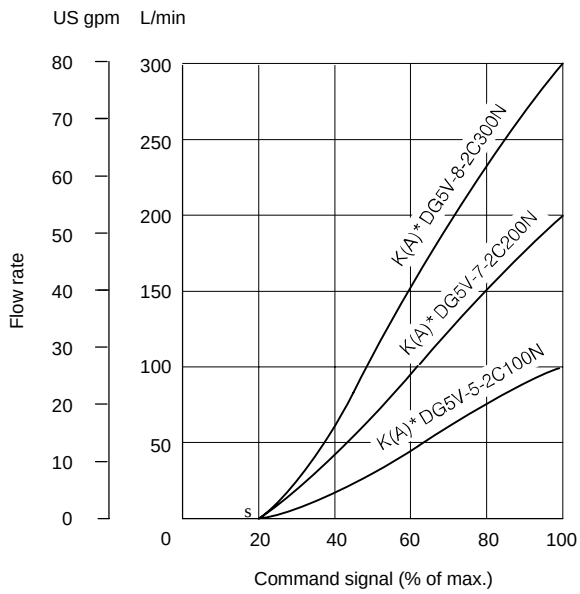

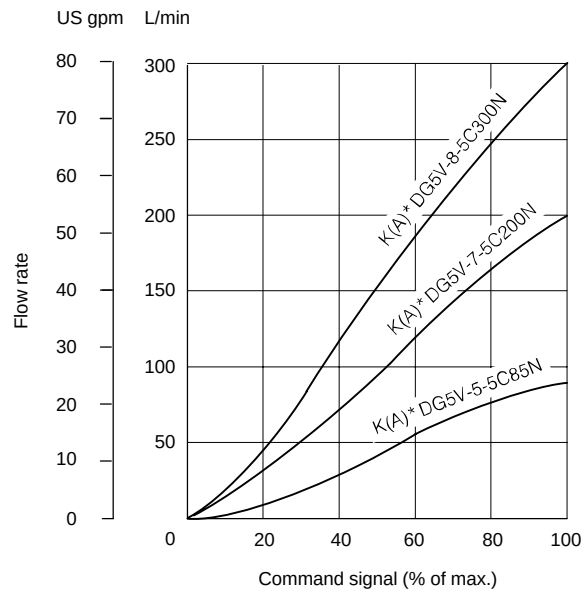

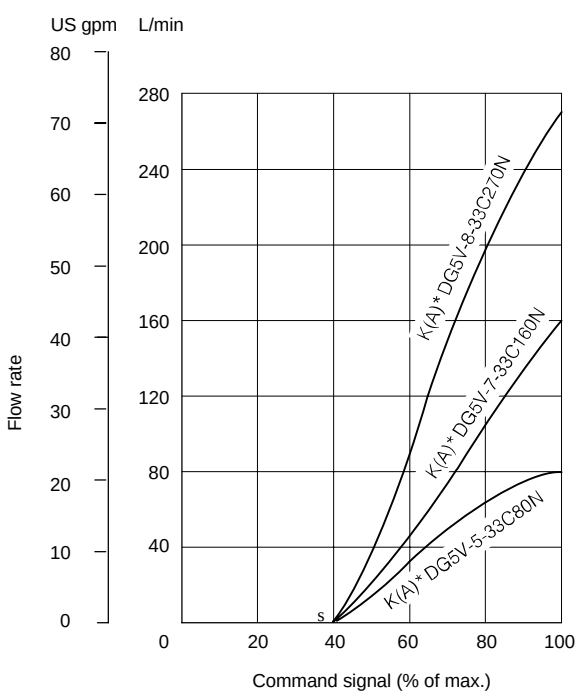

s *These points will vary from valve to valve, but can be adjusted using the deadband compensation feature of the drive amplifier.*

n *At other Δp values, flow rates approximate to:*

$$Q_X = Q_D \sqrt{\frac{\Delta p_X}{\Delta p_D}}$$

where Q_D = *Datum flow rate*
Δp_D = *Pressure drop at datum flow rate*
Δp_X = *Required* Δp

Frequency Response, Typical

For an amplitude of ±25% of max. stroke (center-to-offset) about the 50% position

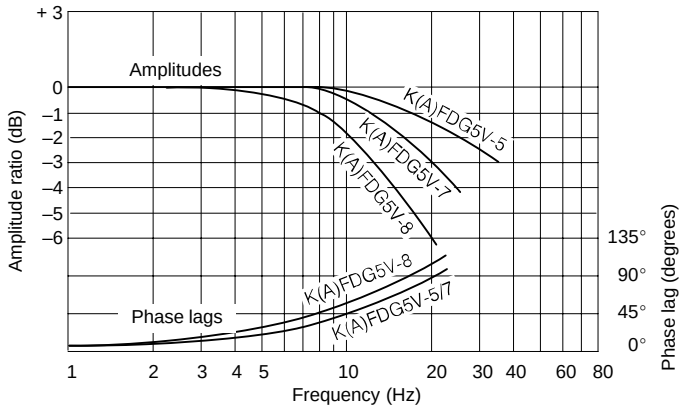

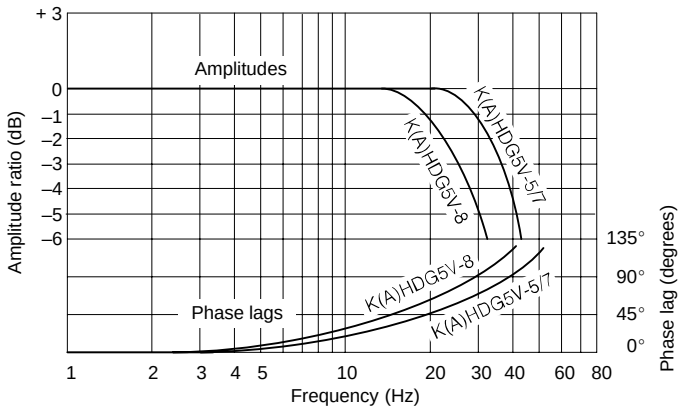

Pressure Gain

K(A)F/HDG5V*-5C*N**

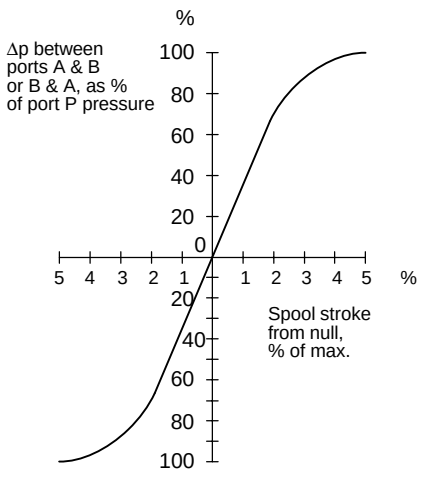

Electrical Block Diagram

Command Signals and Outputs

7-pin plug Pin D	Pin E	Flow direction
Positive	0V	P to A
0V	Negative	
U_D - U_E = Positive		
Negative	0V	P to B
0V	Positive	
U_D - U_E = Negative		

KAF/HDG5V-*

Wiring
Connections must be made via the 7-pin plug mounted on the amplifier.
Recommended cable sizes are:

Power cables:
For 24V supply
0,75 mm^2 (18 AWG) up to 20m (65 ft)
1,00 mm^2 (17 AWG) up to 40m (130 ft)

Signal cables:
0,50 mm^2 (20 AWG)

Screen:
A suitable cable would have 7 cores, a separate screen for signal wires and an overall screen.
See wiring connection diagrams on page NO TAG

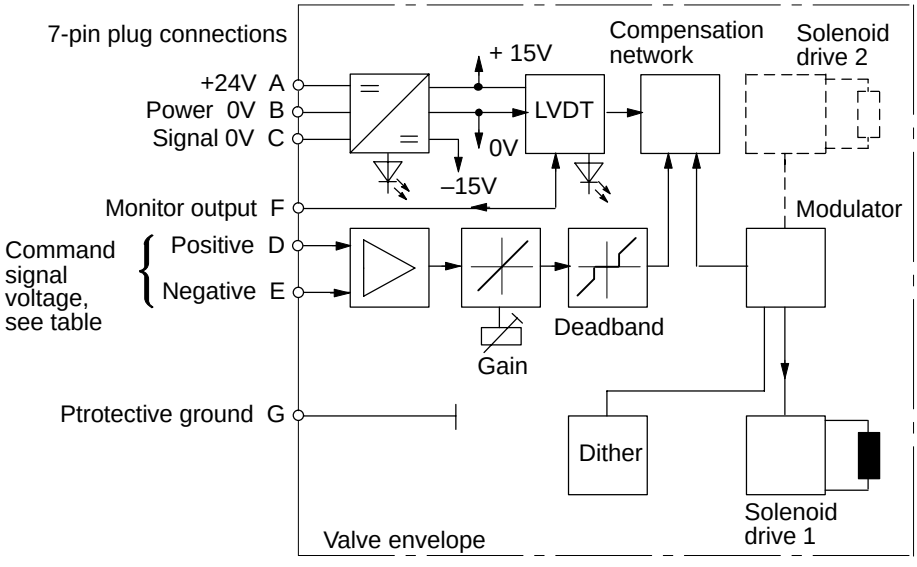

Warning
All power must be switched off before connecting or disconnecting any plugs.

Wiring Connection

Wiring Connections for Valves with integral Amplifier

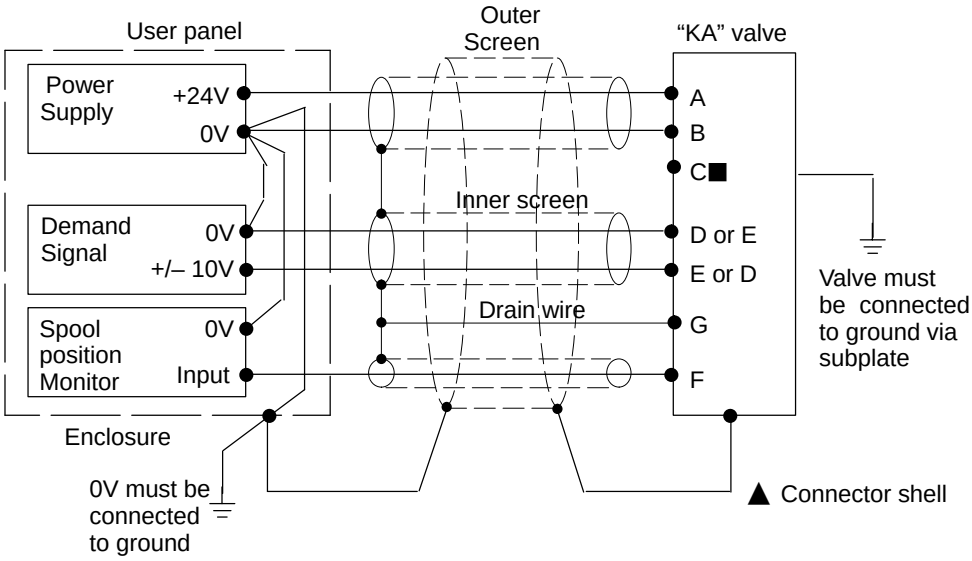

■ Spool position monitor voltage (pin F) will be referenced to the KA valve local ground. A "local ground" (pin C) is provided for optional use by differential input customer supplied electronics.

▲ Note: In applications where the valve must conform to European RFI/EMC regulations, the outer screen (shield) must be connected to the outer shell of the 7-pin connector and the valve body must be fastened to the earth ground. Proper earth grounding practices must be observed in this case, as any differences in command source and valve ground potentials will result in a screen (shield) ground loop.

Warning

Do not ground pin C. If the local ground (pin C) is not used for differential monitor electronics, do not use. Read monitor pin F with respect to ground.

Warning

Electromagnetic Compatibility (EMC)

It is necessary to ensure that the valve is wired-up as above. For effective protection, the user electrical cabinet, the valve subplate or manifold, and the cable screens should be connected to efficient ground points. The metal 7-point connector, part no. 934939, should be used for the integral amplifier.

In all cases, both valve and cable should be kept as far as possible from any sources of electromagnetic radiation such as cables carrying heavy current, relays and certain kinds of portable radio transmitters, etc. Difficult environments could mean that extra screening may be necessary to avoid the interference.

It is important to connect the 0V lines as shown above. The multi-core cable should have at least two screens to separate the demand signal and monitor output from the power lines.

Installation Dimensions in mm (inches)

KAF and KAH Models
All KAF and KAH models have amplifier housing, connector plug and wiring adaptor, mounted on top of pilot stage.

3rd angle projection

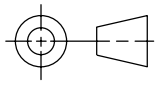

For overall valve dimensions, refer to individual valve drawings.

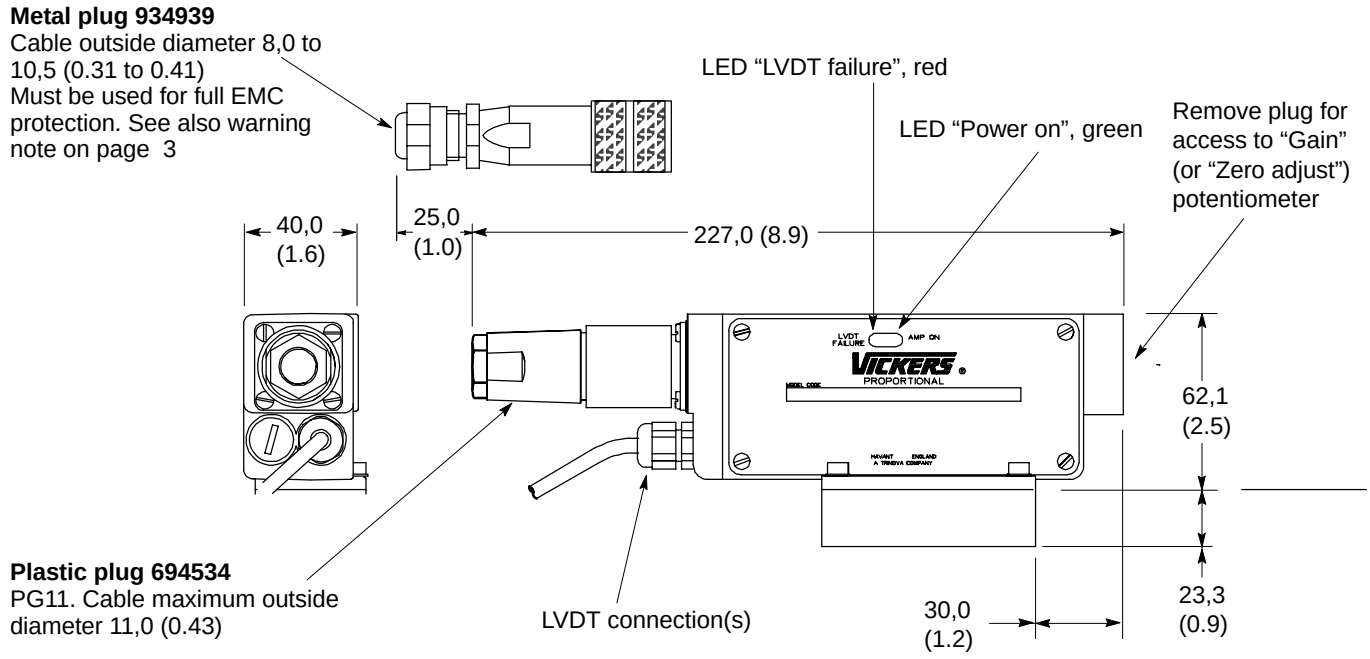

KFDG5V-5

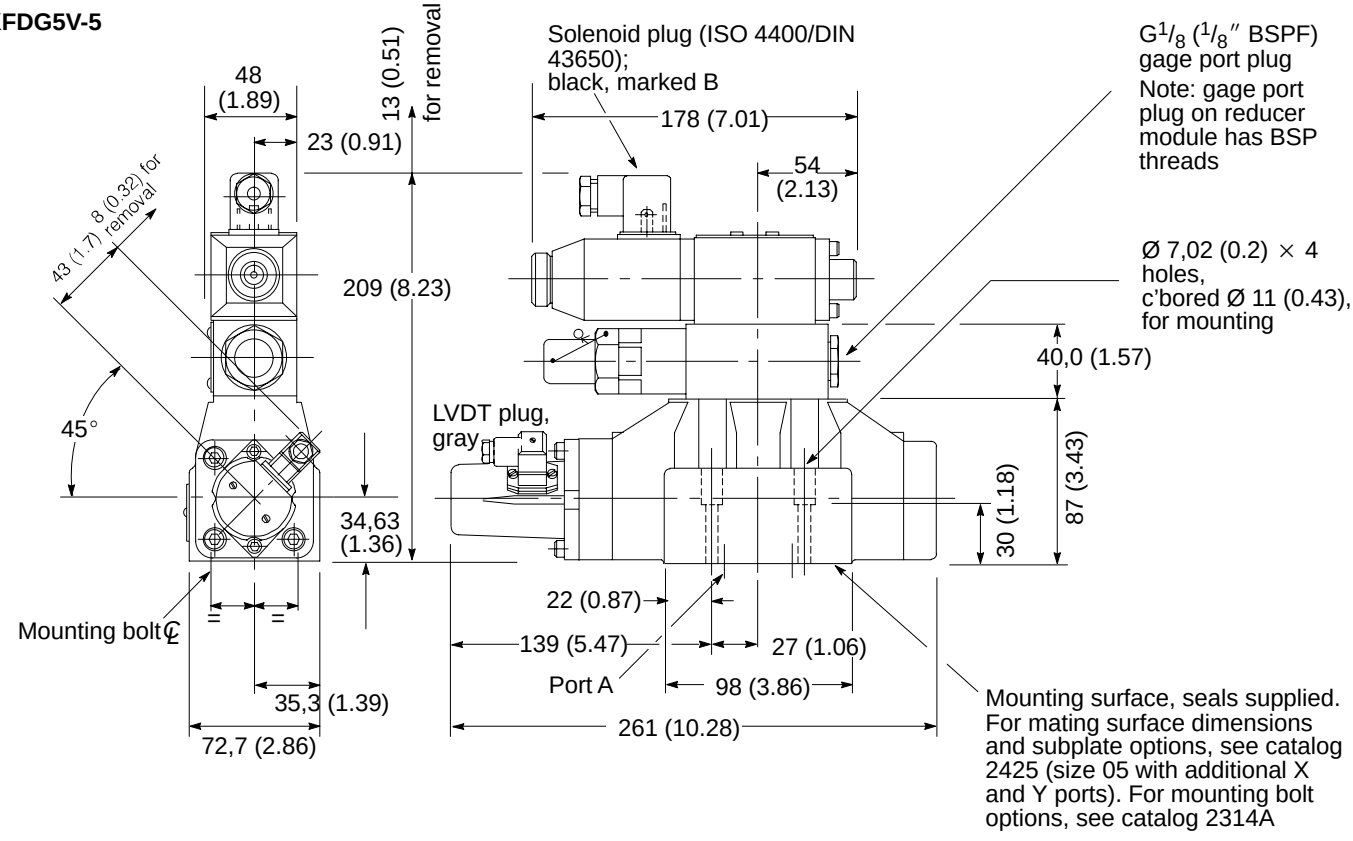

KFDG5V-7

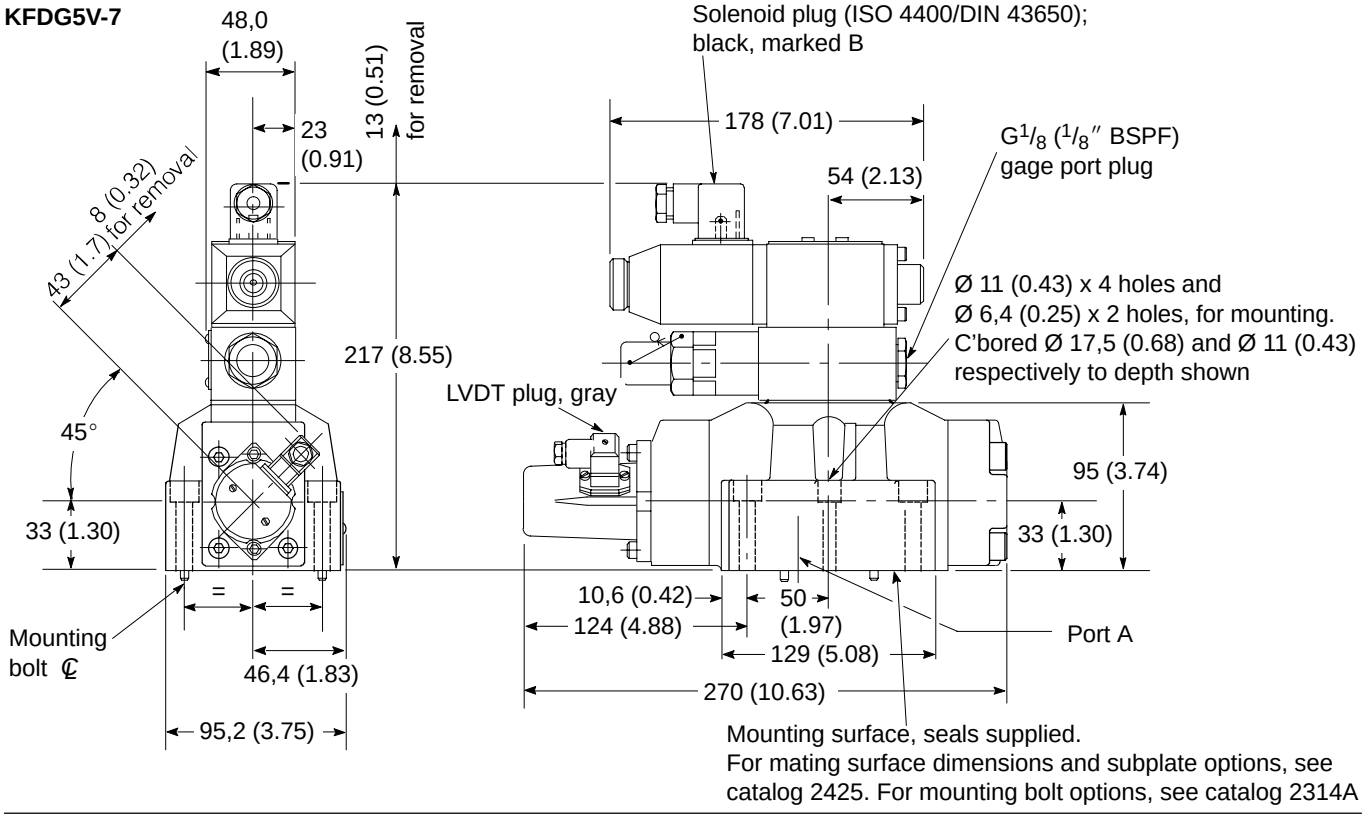

KFDG5V-8

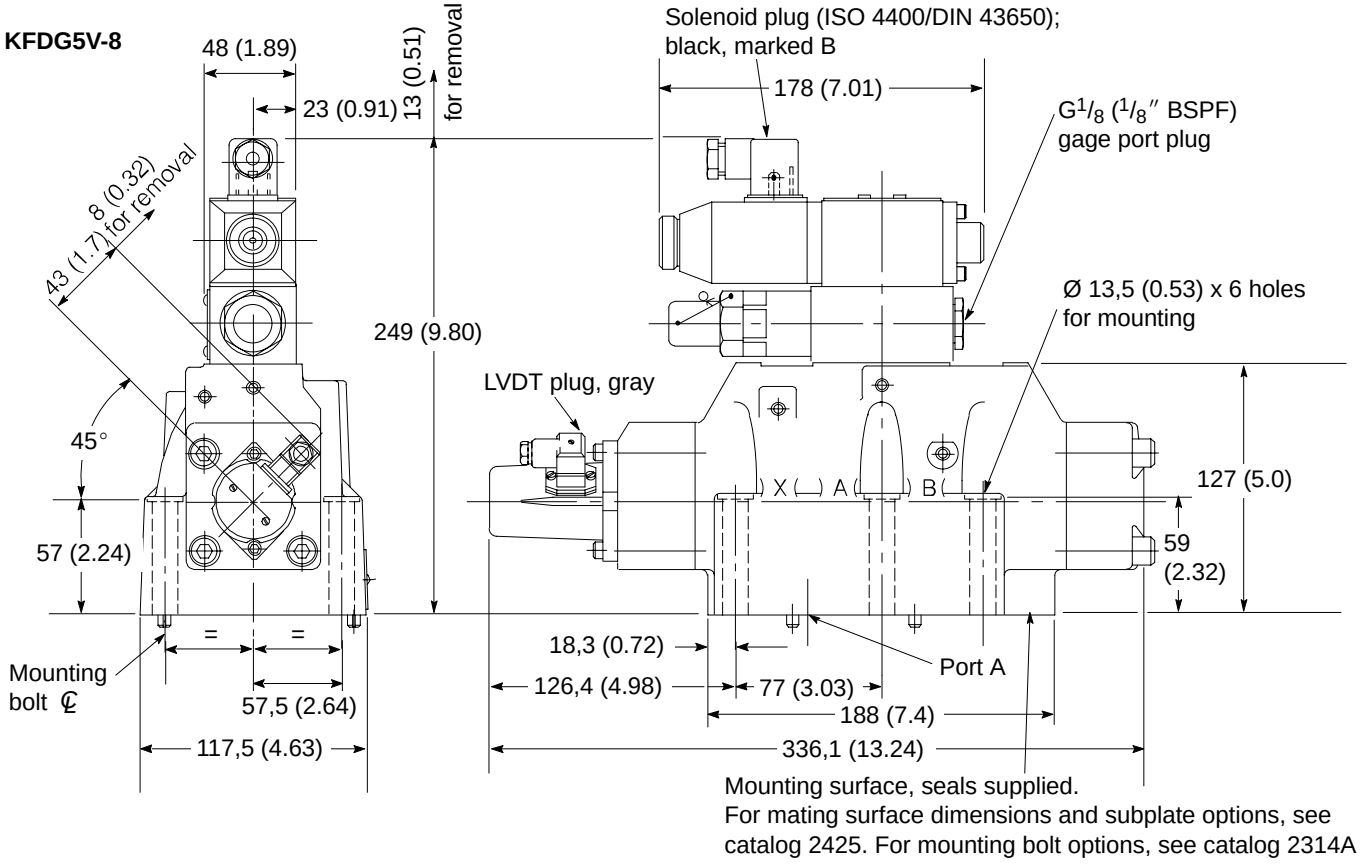

KHDG5V-5

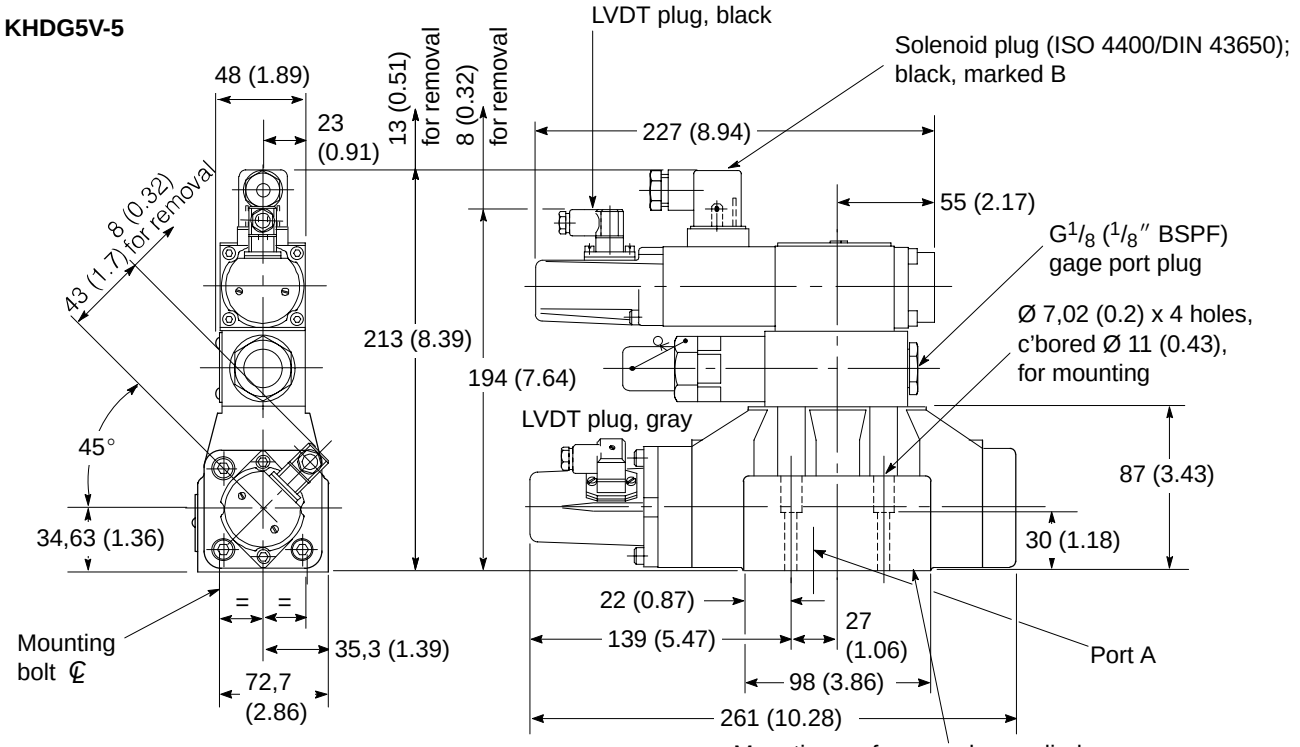

Mounting surface, seals supplied.
For mating surface dimensions and subplate options, see catalog 2425 (size 05 with additional X and Y ports). For mounting bolt options, see catalog 2314A

KHDG5V-7

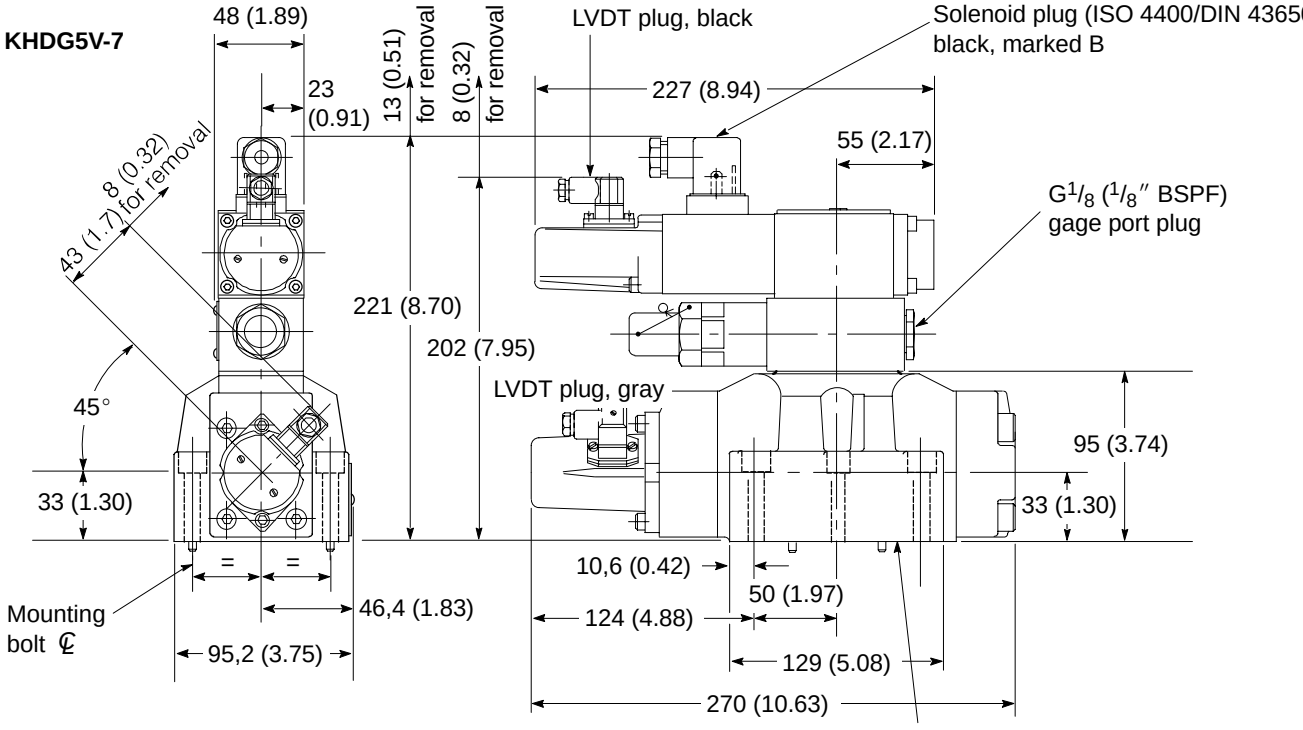

Mounting surface, seals supplied.
For mating surface dimensions and subplate options, see catalog 2425. For mounting bolt options, see catalog 2314A

KHDG5V-8

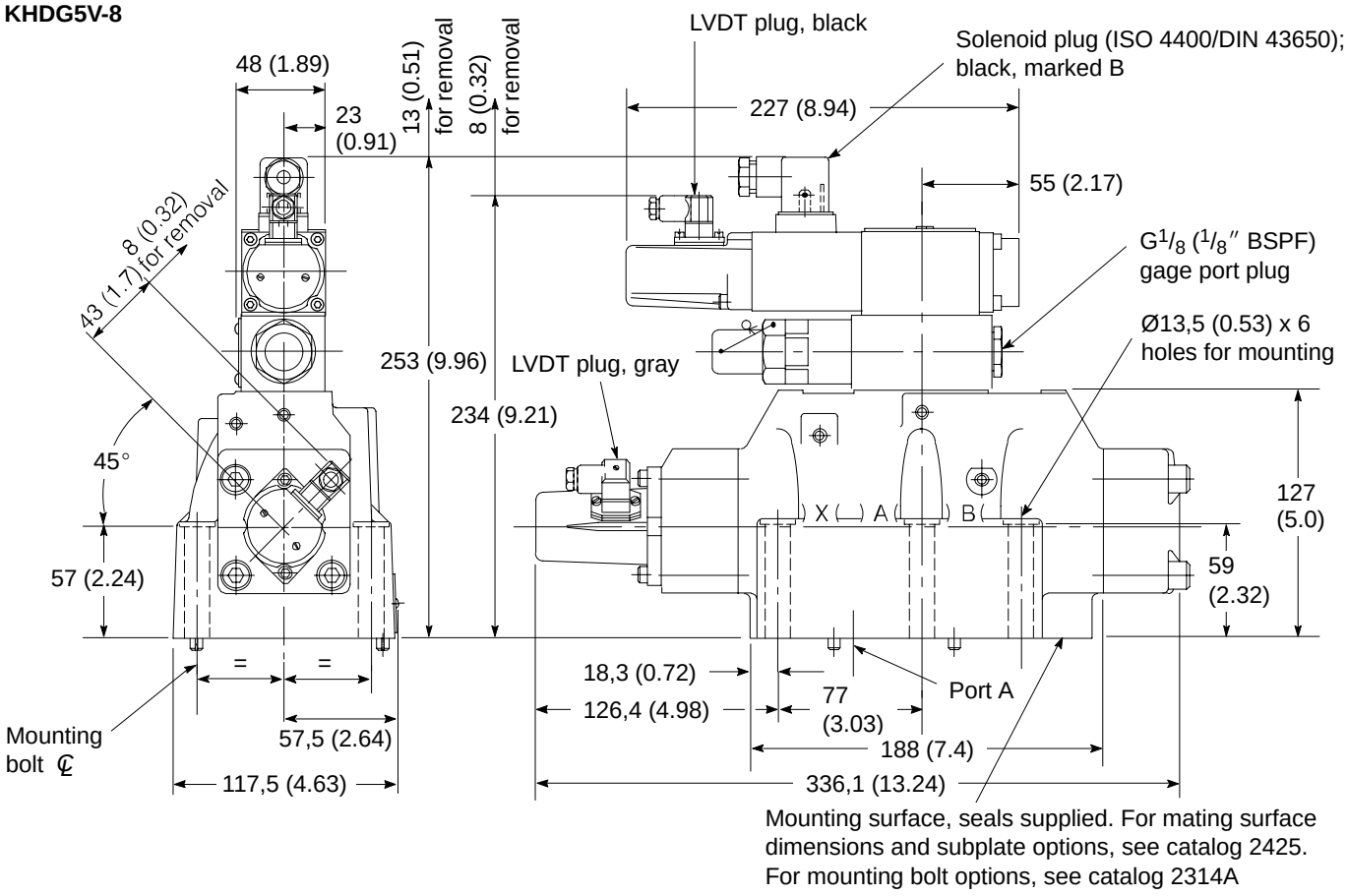

Pilot-Supply Plug

For K(A)*DG5V-5 and -8, as below
For K(A)*DG5V-7, see cross-section on page 1 .

K(A)*DG5V-5 Valves

Viewed from port B end of main stage

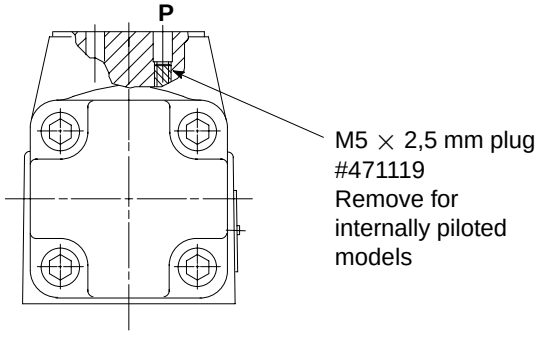

K(A)*DG5V-8 Valves

Section through port P of main stage

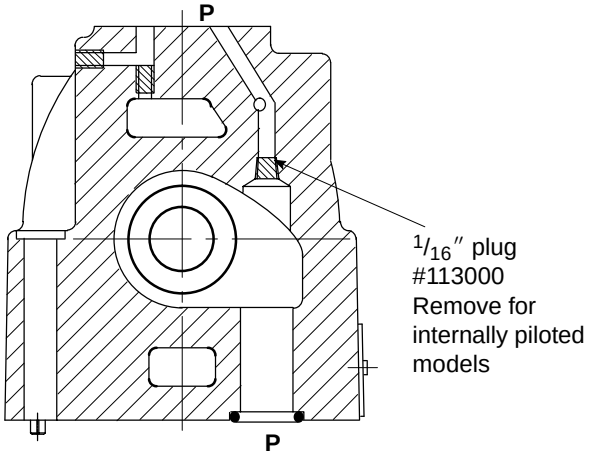

Further Information

Hydraulic Fluids
Materials and seals used in these valves are compatible with:
Anti-wear petroleum oils ..... L-HM
Non-alkyl based
phosphate esters ..... L-HFD
The extreme operating range is 500 to 13 cSt (270 to 70 SUS) but the recommended running range is 54 to 13 cSt (245 to 70 SUS). For further technical information about fluids see Technical Information leaflet B-920 or I-286-S.

Contamination Control Requirements
Recommendations on contamination control methods and the selection of products to control fluid condition are included in Vickers publication 9132 or 561, "Vickers Guide to Systemic Contamination Control". The book also includes information on the Vickers concept of "ProActive Maintenance". The following recommendations are based on ISO cleanliness levels at 2 µm, 5 µm and 15 µm.

For products in this catalog the recommended levels are:
Up to 210 bar (3000 psi) 18/**16**/**13**
Above 210 bar (3000 psi) 17/**15**/**12**

Installation and Start-up Guidelines
The proportional valves in this catalog can be mounted in any attitude but it may be necessary, in certain demanding applications, to ensure that the solenoids are kept full of hydraulic fluid.

If this proves to be the case any accumulated air can be bled from the solenoid bleed screws. This task is easier if the valve has been mounted base downwards. Good installation practice dictates that the tank port, and any drain port, are piped so as to keep the valve full of fluid once the system start-up has been completed.

Temperatures
For petroleum oil:
Min. ..... –20°C (–4°F)
Max.* ..... +70°C (158°F)

* *To obtain optimum service life from both fluid and hydraulic system, 65°C (150°F) normally is the maximum temperature.*

For other fluids where limits are outside those of petroleum oil, consult fluid manufacturer or Vickers representative. Whatever the actual temperature range, ensure that viscosities stay within those specified under "Hydraulic Fluids".

Ambient for:
Valves, including any feedback transducers and integral amplifiers, at full performance specification:
–20 to +60°C (–4 to +140°F).
Valves, as above, will operate at temperatures of 0 to –20°C (32 to –4°F) but with a reduced dynamic response.

Storage:
–25 to +85°C (–13 to +185°F)

Eurocard electronics:
0 to 50°C (32 to 122°F)

Seal Kits
K(A)H Pilot 02-138953
KH pilot 565142
KF Pilot 565149
K(A)F/H-5 Mainstage 565143
K(A)F/H-7 Mainstage 565144
K(A)F/H-8 Mainstage 565145

Eaton
14615 Lone Oak Road
Eden Prairie, MN 55344
USA
Tel: 952 937-9800
Fax: 952 974-7722
www.hydraulics.eaton.com

Eaton
20 Rosamond Road
Footscray
Victoria 3011
Australia
Tel: (61) 3 9319 8222
Fax: (61) 3 9318 5714

Eaton
46 New Lane, Havant
Hampshire PO9 2NB
England
Tel: (44) 23 92 486 451
Fax: (44) 23 92 487 110

EATON | Vickers

©2002 Eaton Corporation
All rights reserved
Printed in USA
Document No. GB-2457
July 2002