MEASURE- and BLEEDER-CONNECTIONS
DN 2 PN 500

Sheet No.
1650 D

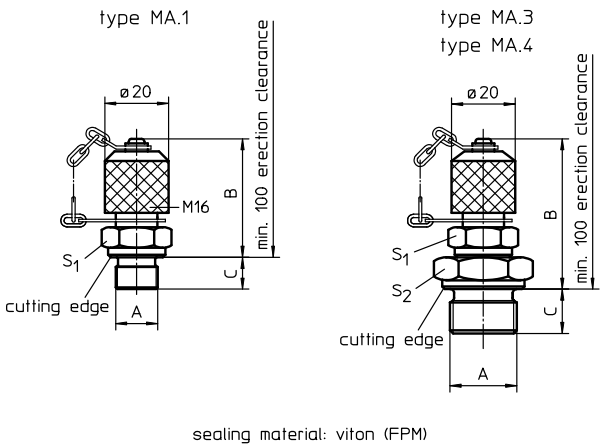

Mini-measuring connection

1. Type index: (ordering example)

MA. 1. ST

1	2	3

1 **series:**
MA = mini-measuring connection

2 **screwed plug:**
1 = G ¼ DIN 3852 T2, design B
3 = G ½ DIN 3852 T2, design B
4 = G ¾ DIN 3852 T2, design B

3 **material:**
ST = steel
VA = stainless steel

2. Dimensions:

type	A	B	C	S_1	S_2
MA.1	G ¼ A	36	10	19	-
MA.3	G ½ A	46	14	19	27
MA.4	G ¾ A	46	16	19	32

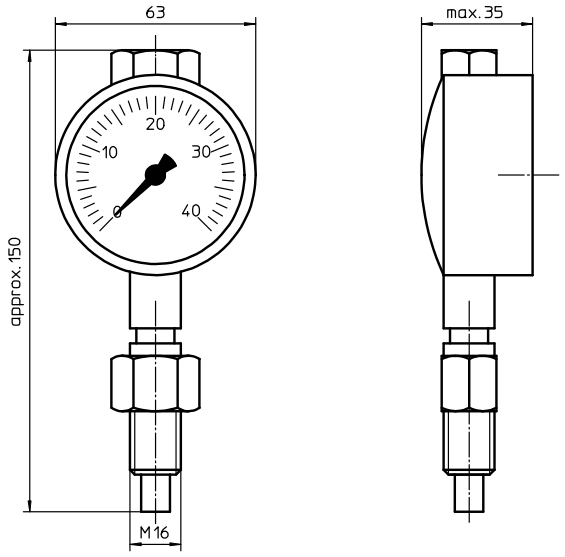

Pressure gauge

1. Type index: (ordering example)

Pressure gauge. 16

1	2

1 **series:**
pressure gauge

2 **pressure range:**
16 = 0 - 16 bar
40 = 0 - 40 bar
100 = 0 - 100 bar
250 = 0 - 250 bar
600 = 0 - 600 bar

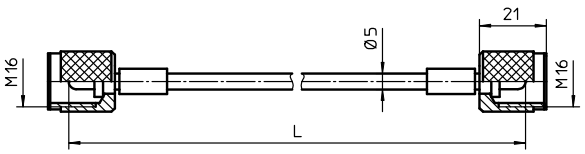

High pressure hose

1. Type index: (ordering example)

High pressure hose. M 16. 630

1	2	3

1 **series:**
high pressure hose

2 **threaded connection:** M 16

3 **length:**
630 = 630 mm
2000 = 2000 mm

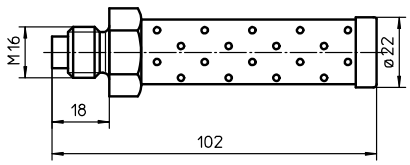

Spray protection M 16

(ordering example)

EDV 09/99

Changes of measures and design are subject to alteration!

EATON
Powering Business Worldwide

Friedensstrasse 41, 68804 Altlussheim, Germany

phone +49 - (0)6205 - 2094-0
fax +49 - (0)6205 - 2094-40
e-mail info-internormen@eaton.com
url www.eaton.com/filtration

Description:

The measuring-connection and spray protection are designed for filters up to PN 500 bar. The measuring-connection has to be mounted tightly to the foresen measure connection- and spray protection spots.
It is possible to conect the pressure gauge by means of high-pressure hose with the screw coupling M16 without interrupting operation.
The high-pressure hose is to be deaerated before the first measuring.
A capillary effect prevents a drain off of the operating fluid.
The spray protection must be used in connection with the high-pressure hose and is designed for filters with a capacity of approx. 10 l.

Note!

The deaeration is only to the executed with operating pressure up to max. 32 bar. A flow of approx. 1,2 l/min of operating fluid is given at a pressure of 32 bar and a viscosity of 25 mm^2/s. It is inadmissible to connect the high-pressure hose with the measuring-connection without spray protection respectively without connected pressure gauge. (risk of injury)