MATING FLANGES

Master Gauge for Holes SAE J 518 c 3000 PSI

Sheet No.
1652 F

Flanges are offered as complete unit, i. e. including cylinder screws, spring ring and O-ring and are used to connect the filter to the pipe-system.

welded flange socket

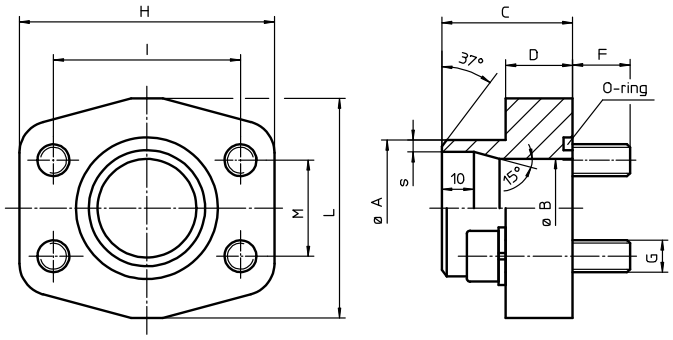

welded flange

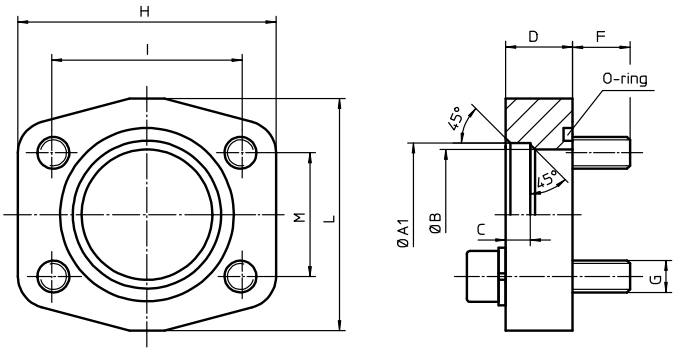

Type index: (ordering example)

BFS. 8. A. 60,3 x 2,9. St. P. 3000

1	2	3	4	5	6	7

1 **series:**
BFS = flange with master gauge for holes according to SAE-J518c

2 **connection size:**
6 = 1 ¼“
7 = 1 ½“
8 = 2“
9 = 2 ½“
A = 3“
A1 3 ½“
B = 4“
C = 5“

3 **design:**
A = welded flange socket
E = welded flange

4 **size of connection pipes of the flange:**
outside diameter A of pipe x pipe-wall thickness s (see table below)

5 **flange material:**
St = steel (C 22, St 52-3)
VA = stainless steel (X 5 Cr Ni 1810)

6 **sealing material:**
P = Nitrile (NBR)
V = Viton (FPM)

7 **master gauge for holes according to SAE-**
3000 = 3000 PSI

welded flange: design A

SAE-connection 3000 PSI	pipe-dimension A x s	PN	B	C	D	F	G	H	I	L	M	O-ring	sheet-no.
1 ¼“	33,7 x 2,6 42,4 x 2,6	63	25 31	41	21	18	M 10	80	58,7	69	30,2	37,69 x 3,53	21111-3 21111-3
1 ½“	48,3 x 2,6	63	38	44	25	18	M 12	94	70,0	77	35,7	47,22 x 3,53	21112-3
2“	48,3 x 3,7 48,3 x 2,6 60,3 x 2,9	63	38 38 50	45	25	18	M 12	103	77,8	89	42,9	56,75 x 3,53	21113-3 21113-3 21113-3
2 ½“	76,1 x 2,9	40	63	50	25	18	M 12	115	89,0	101	50,8	69,45 x 3,53	21114-3
3“	88,9 x 3,2	40	73	50	27	23	M 16	135	106,4	124	62,0	85,32 x 3,53	21115-3
3 ½“	101,6 x 3,6	40	89	48	27	23	M 16	153	120,7	137	70,0	98,02 x 3,53	22746-3
5“	114,3 x 3,6	40	107	50	27	25	M16	184	152,4	165	92,0	136,12 x 3,53	-
5“	139,7 x 4,0	40	131	50	28	25	M16	184	152,4	165	92,0	136,12 x 3,53	-

welded flange: design E

SAE-connection 3000 PSI	pipe-dimension A x s	PN	A1	B	C	D	F	G	H	I	L	M	O-ring	sheet-no.
4“	76,0 x 3,6 88,9 x 3,2 114,3 x 3,6	40	77 90 115	69 82 100	10	25	25	M 16	162	130	146	77,8	110,72 x 3,53	21123-3
5“	114,3 x 3,6	40	115	100	12	25	19	M16	184	152,4	165	92,0	136,12 x 3,53	32508-3
5“	139,7 x 4,0	40	142	130	12	25	19	M16	184	152,4	165	92,0	136,12 x 3,53	32557-3

pipe-dimension A = outside diameter
s = pipe-wall thickness

Changes of measures and design are subject to alteration!

EDV 10/00

EATON Powering Business Worldwide

Friedensstrasse 41, 68804 Altlussheim, Germany

phone +49 - (0)6205 - 2094-0 e-mail info-internormen@eaton.com
fax +49 - (0)6205 - 2094-40 url www.eaton.com/filtration