Eaton Electrical Inc.
1000 Cherrington Parkway
Moon Township, PA 15108
United States
tel: 1-800-525-2000
www.EatonElectrical.com

Selective Coordination

By: Charles J. Nochumson,
National Application Engineer
Eaton's electrical business
Phoenix, AZ, USA.

Co-author: Kevin J. Lippert
Manager of Codes & Standards
Eaton's electrical business
Pittsburgh, PA USA.

Selective Coordination

Abstract

In the design of Elevator feeders, Emergency Systems, Legally Required Standby Systems, and the essential portion of Healthcare electrical systems, today's engineer faces greater difficulty in meeting the 2005 NEC®, Selective Coordination requirements. Whether utilizing breakers or fuses, the engineer has to understand the nature of the devices being selected, and properly apply them, such that only the protective device nearest to the fault will open to clear an overload/fault condition. This paper will briefly cover the NEC requirements regarding selective coordination. A review of short-time ratings and how they affect selective coordination will be discussed, along with an appendix regarding X/R ratios for low-voltage circuit breakers. This article will then discuss some techniques for selecting low-voltage circuit breaker protective devices to provide selective coordination.

I. 2005 NEC REQUIREMENTS

The 2005 National Electrical Code®, [1] (NEC) has added specific requirements for designing a system with selective coordination. Coordination (Selective) was added to Article 100 Definitions as follows: "Localization of an overcurrent condition to restrict outages to the circuit or equipment affected, accomplished by the choice of overcurrent protective devices and their ratings or settings." Since the choice of the overcurrent protective device, together with their ratings or settings, is a task of the design professional, a better understanding of the options and choices is required.

In past issues of the NEC, only Article 620.62 (Elevators, Dumbwaiters, Escalators, Moving Walks, Wheelchair Lifts, and Stairway Chair Lifts) had a specific requirement for selective coordination, and the definition appeared in Article 240.2. Article 620.62, Selective Coordination continues to require "Where more than one driving machine disconnecting means is supplied by a single feeder, the overcurrent protective devices in each disconnecting means shall be selectively coordinated with any other supply side overcurrent protective device." The 2005 NEC has now added a similar requirement under Article 700.27, Coordination, "Emergency system(s) overcurrent devices shall be selectively coordinated with all supply side overcurrent protective devices." Also Article 701.18, Coordination added "Legally required standby system(s) overcurrent devices shall be selectively coordinated with all supply side overcurrent devices."

In addition, for Healthcare facilities Article 517.26, Application of Other Articles requires that "The essential electrical system shall meet the requirements of Article 700, except as amended by Article 517." Since Article 517 did NOT specifically address any requirement for selective coordination, the 2005 Article 700.27 requirement is also applicable to the "essential electrical systems" consisting of equipment necessary for patient care and basic hospital operation, life safety and critical systems for Healthcare facilities.

The following discussion will point out ways to obtain a selectively coordinated system utilizing low-voltage (600 volts and below) circuit breakers. However, the design engineer is cautioned, that as time delay tripping of the upstream breaker is incorporated into the system to provide for selective coordination, there is a corresponding increase of arc flash energy available.

Users should also consider installing a label calling attention to "This equipment has been selectively coordinated and caution should be exercised before making changes."

II. PROTECTIVE DEVICE SHORT-TIME & INTERRUPTING CONSIDERATIONS

An understanding of protective devices, their operation, selection and settings in relationship to selective coordination is essential for the design engineer in order to properly design a selectively coordinated system. Each selected low-voltage circuit breaker must have a voltage rating and interrupting capacity equal to or greater than the system voltage and available fault current at its point of application in the electrical distribution system. UL® listed series ratings must be carefully reviewed before being utilized in a selectively coordinated system, this applies for both two circuit breakers in series, or a fuse in series with a circuit breaker. Both fuses and low-voltage circuit breakers, if properly selected, can be utilized to meet NEC requirements for selective coordination.

It is noted that medium voltage circuit breakers typically have very high momentary ratings. This allows their contacts to remain closed under very high fault conditions, allowing sufficient time for downstream devices closest to the overload/fault condition to operate. Thus medium-voltage circuit breakers with their associated relaying, when properly selected can achieve selective coordination. Also, medium-voltage fuses, whether current limiting type or expulsion type, if properly selected, can also be readily incorporated into a selectively coordinated system.

The remainder of this paper will focus on the selection and application of low-voltage circuit breakers. When considering selective coordination in the normal overload range of low-voltage circuit breakers, it is only necessary to ensure that the minimum time band of the upstream device "A," does not overlap the maximum time band of the downstream device "B." This information can be determined from published time-current curves of the devices. **[See Figures 1A & 1B.]**

A. Low-Voltage Circuit Breaker Short-Time Rating

In considering the use of low-voltage circuit breakers to achieve selective coordination, an understanding of how each type of low-voltage circuit breaker operates under overload and short circuit conditions is necessary. The interrupting rating of the breaker refers to "The highest current at rated voltage that a device is intended to interrupt under standard test conditions."[2] On the other hand, the short-time rating of the low-voltage circuit breaker refers to "A rating applied to a circuit breaker that, for reason of system coordination, causes tripping of the circuit breaker to be delayed beyond the time when tripping would be caused by an instantaneous element." [3] In other words, the device's ability to stay closed and NOT open the circuit immediately under fault conditions. For the purposes of this article, the short-time rating of the breaker will be broken down into two facets: 1) Short-time current rating — the current carried by the circuit breaker for a specified interval, or the maximum current magnitude under a fault condition for which the circuit breaker can stay closed, and 2) Short-time delay rating — an intentional time delay in the tripping of a circuit breaker between the overload and the instantaneous pickup setting. The maximum short-time delay is the maximum amount of time the breaker can keep its contacts closed under the fault condition. If two breakers are in series, to obtain selective coordination, the upstream breaker must have a short-time current rating above the actual fault current on the load side of any downstream breaker. In addition, the upstream breaker has to have short-time delay capability long enough to allow the downstream breaker to open and clear the fault condition.

Eaton Electrical Inc.
1000 Cherrington Parkway
Moon Township, PA 15108
United States
tel: 1-800-525-2000
www.EatonElectrical.com

B. Molded Case Circuit Breakers

Molded Case Circuit Breakers (MCCBs) are manufactured and tested to the UL 489 standard. MCCBs have over-center toggle mechanisms and either a thermal-magnetic or electronic trip unit. The thermal magnetic trip unit is such that the magnetic pick-up maximum setting is approximately 10 times the trip rating. The electronic trip unit is typically furnished with a fixed instantaneous override of approximately 10 to 15 times the breaker frame rating, or trip unit rating. Thus for MCCBs with electronic trip units, for any load side fault above these levels, the breaker will open. The exact magnitude of current which will cause the MCCB to open, will vary by 1) circuit breaker manufacturer, 2) circuit breaker frame rating, 3) type of trip unit, 4) type/vintage of MCCB, 5) manufacturer's curve tolerances. For purposes of this paper, it will be assumed that the current magnitude needed to open MCCBs with electronic trips instantaneously is 13 times the frame rating — its maximum fixed instantaneous override. The manufacturer's actual data should be used to determine this value. Typically for MCCBs, once the magnetic pick-up or fixed instantaneous override is exceeded, the opening time is 1 cycle or less. **[See Figure 1A.]**

Although short-time "ratings" for MCCBs are not covered in the MCCB standards[4], some MCCBs are equipped with electronic trip units that have adjustable "short delay" functions. However, they typically also have either an adjustable instantaneous trip (typically with a maximum setting of 10 times trip ampere) or a fixed instantaneous override (of 13 times the frame ampere rating). When the electronic trip is in the short-time pick-up range (below 13 times frame size), they can typically be adjusted up to a maximum short-time delay setting of approximately 18 cycles (300 ms).

Current Limiting

Current limiting circuit breakers have characteristics that, when operating within their current-limiting range, limit the let-through I^2t to a value less than the I^2t of a 1/2-cycle wave of the symmetrical prospective current. [5] Current Limiting Circuit Breakers achieve this by opening their contacts very rapidly, such that their I peak let-through current is reduced to a value much lower than the I peak current available from the system at the MCCB's point of application.

C. Insulated Case Circuit Breakers

Insulated Case Circuit Breakers (ICCBs) are also manufactured and tested to the UL-489 standard, however, they usually have a two-step stored energy mechanism and increased short-time ratings. These breakers are typically available in 800 A, 1600 A, 2000 A, 2500 A, 3000 A, 4000 A and 5000 A frame sizes. Although they may have high interrupting ratings, the typical instantaneous override values for ICCBs are 25 kA to 35 kA for the smaller frames and up to 85 kA for the larger frames. Maximum short-time delay capability is generally up to 30 cycles (0.5 s). **[See Figure 1A.]**

D. Low-Voltage Power Circuit Breakers

Low-Voltage Power Circuit Breakers (LVPCBs) are manufactured and tested to the UL-1066 Standard, ANSI C37 standards and have a two-step stored energy mechanism. LVPCBs are typically available in 800 A, 1600 A, 2000 A, 2500 A, 3000 A, 4000 A and 5000 A frame sizes. However, even the smaller 800 A frame size is available with very high short-time current ratings of approximately 85 kA to 100 kA. LVPCBs are capable of keeping their contacts closed for up to 30 cycles of fault current, at levels up to their maximum short-time current rating. Thus LVPCBs can normally provide selective coordination with relative ease when in series with each other, or when supplying downstream MCCBs or ICCBs. **[See Figure 1B.]**

F. Effect of X/R Ratio

The interrupting rating for low-voltage circuit breakers is based on test circuits with a Power Factor (PF) resulting in a Reactance to Resistance (X/R) ratio as indicated in **Appendix Table 1**

The test circuits for circuit breakers with PF and X/R ratios indicated in **Appendix Table 1** were selected because in many cases they represent the real world conditions. For example, LVPCBs are typically utilized in applications such as service entrance switchgear, or in secondary switchgear connected to unit substations. Thus, because the utility transformers or unit substations transformer have a large reactance (X) component, the X/R ratio of 6.6 or below is typical of many of these applications. By contrast, smaller MCCBs having less than 10 kA interrupting rating, typically are applied in branch circuit panelboards being supplied by long lengths of conductors having higher Resistance (R), thus reducing the X/R ratio.

As the system available X/R ratio gets higher, the ratio of available first 1/2-cycle peak current, to the system rms available fault current, becomes higher, reaching a maximum ratio of 2.823 at zero power factor. The higher the X/R ratio (lower fault PF), the harder it is for a circuit breaker to interrupt the fault condition. There are circuit breaker derating tables for interrupting ratings which should be utilized when the actual system X/R exceeds the test circuit X/R as indicated in **Appendix Table 2**.

Since the trip unit's instantaneous pickup responds to current peak, to ensure selective coordination is obtained, a short circuit coordination study should be performed to determine the available fault current levels, and X/R ratios, at various key points where protective devices are located in the electrical distribution system.

III. TECHNIQUES TO OBTAIN CIRCUIT BREAKER SELECTIVE COORDINATION

Circuit breakers must have an interrupting capacity (including considerations for X/R ratio) greater than the available fault current at the point where they are being applied in the electrical distribution system. In addition, their voltage rating should be greater than or equal to the circuit voltage at their point of application.

A. Selection Based on "No-Overlap" of Time-Current Curves

Select Specific MCCBs

Selective coordination between upstream MCCBs and downstream MCCBs requires special consideration under fault conditions. There are various ways to obtain selective coordination, some applicable basic methods are as follows: **[See Figure 2:** Case 1 illustrates a remote main breaker and Case 2 illustrates a main breaker integral to the panelboard].

- In the normal overload range, the line side MCCB minimum trip curve must be greater than the load side breaker maximum trip curve.
- For MCCBs with thermal-magnetic trip units, select a line side breaker "A" with a magnetic trip (instantaneous element) setting above the calculated available fault current level at the load side downstream breakers "B."
- For MCCBs with electronic trip units, select a line side breaker "A" which has a fixed instantaneous override greater than the calculated available fault current level at the load side downstream breakers "B." In addition, the line side breaker "A" short-time delay setting must be selected to allow the load side breaker adequate time to open and clear the fault.

Eaton Electrical Inc.
1000 Cherrington Parkway
Moon Township, PA 15108
United States
tel: 1-800-525-2000
www.EatonElectrical.com

Referring to **Figure 2**, where the available fault current on the load side of the "B" MCCBs is higher than the magnetic trip or short-delay pickup rating of what would be the normally selected line side "A" MCCB, the following methods should be considered for achieving selective coordination:

Select Larger Line Side MCCB

Select a line side breaker A with a larger frame size than would normally be required when just considering the load current requirements. Typically, the larger the MCCB frame size, the higher the magnetic trip adjustment or fixed instantaneous override value. **General Rule**: The magnetic trip setting or fixed instantaneous override value must be higher than the calculated available fault current at load side circuit breaker B (If_2). However, the larger the MCCB frame size, typically the higher the associated cost and arc-flash energy.

Select a Line Side Low-Voltage Power Circuit Breaker

Utilize the combination of upstream Low-Voltage Power Circuit Breakers (LVPCBs) and downstream Molded Case Circuit Breakers (MCCBs). The required combinations will vary depending on the available fault current. Most manufacturers have LVPCBs available in two types:

Type 1: LVPCBs with short-time current ratings available up to 100 kA and with interrupting ratings up to 100 kA.

Type 2: For fault currents above 100 kA, LVPCBs are available either as combination LVPCB with current limiters, or as true current limiting versions without current limiters. Both types have interrupting ratings up to 200 kA, but typically have reduced short-time current ratings.

Select Both Line and Load Low-Voltage Power Circuit Breakers

When utilizing Low-Voltage Power Circuit Breakers, because of the high short-time current ratings available in all frame sizes, and their maximum 30-cycle short-time delay rating, there is generally no problem obtaining selective coordination between line and load side LVPCBs.

B. Reduce Available Fault Current

Transformer Method

Utilize step-down or isolation transformers to reduce the available fault current level, such that under fault conditions at branch breaker "B" on the secondary of the transformer, the line side secondary main breaker "A" magnetic trip or fixed instantaneous override pick-up is not exceeded. **[See Figure 3.]** An associated advantage of dividing the loads into smaller groupings is that the system reliability will be improved in addition to providing selective coordination, if the correct secondary MCCB —"A" and branch breakers "B" are utilized. One manufacturer, Eaton Corporation, has a quick selector table for easily determining whether selective coordination is achieved when using common distribution transformers, secondary MCCBs and branch MCCBs. **[See Appendix Table 3.]** This Table is based on actual test data. It can be utilized to provide selective coordination between indicated secondary main MCCB — "A" and the indicated branch MCCBs —"B" by utilizing the following Steps:

Step 1: Determine the load requirements on the secondary side of the dry-type transformer.

Step 2: Select the required kVA rating and ensure that the selected transformer has impedance greater than or equal to that shown in the chart.

Step 3: Select the manufacturer recommended secondary **main** circuit breaker. Frame rating, trip unit, and recommended settings are shown based on 125% of full load current (FLA) per NEC requirements.

Step 4: Select the branch circuit breaker, based on required amperage. Those **branch** circuit breakers listed in the rows corresponding to the main breaker will provide selective coordination with the chosen secondary main circuit breaker. Selective coordination is based on utilizing selected breakers with appropriate adjustable trip settings.

Note: For some transformer kVA ratings, different types of secondary Main Breakers are shown. The most cost-effective secondary main breaker is shown first. Some larger secondary main breaker frame sizes are also shown for the same kVA rating for those applications requiring a wider range of branch breakers. In addition, the existing Eaton Cutler-Hammer® Series C frame, and the new physically smaller Series G frame breakers are shown where applicable. **Example:** Required kVA to serve the 208Y/120 volt load is 112.5 kVA and the largest required branch circuit breaker is 250 amperes. The least expensive recommended secondary main circuit breaker is the 400 ampere KD frame with a 400 A/Trip setting. If a 100% rated secondary main breaker was required, then a CKD would be selected. In addition, either the Series C type LD or the Series G type LG breaker could also be selected with a 600 ampere trip unit, and set at 400 amperes.

Consideration of Cable Impedance

As shown in **Figure 2** Case 1, the available fault current at branch breaker "B" (If_2) is lower than the fault current at main breaker A (If_1) because of the cable impedance between "A" and "B." With the known starting available fault current If_1 (either from short circuit study, the utility company information, unit substation transformer secondary available fault tables[6], or distribution step-down or isolation transformers) an estimate of available fault current If_2 can be easily found from simple calculations, or by utilizing Tables similar to **Appendix Table 4**. [Additional charts for aluminum conductors are available on the Eaton Web site along with a Selective Coordination Calculator which can be utilized for multiple conductors and/or non-metallic raceways and/or 208Y/120 volts.] Begin by selecting the appropriate starting fault current chart. Then select the conductor size and length of conductors from If_1 location to If_2 location. **Example**: Assume the fault current given by the utility at main breaker location is If_1 = 100,000 amperes at 480Y/277 volts. This feeds the 60 ampere remote emergency lighting panelboard with 1-#6 copper conductor per phase and neutral. The emergency panelboard will typically have 15 A or 20 A, 1-pole lighting breakers. From the chart, if the emergency panelboard is located 75 feet away from the main, then the available fault current at If_2 would be only 6700 amperes. A general guideline would be to consider that the main breaker with either a magnetic pick-up setting or fixed instantaneous override value of greater than 6700 amperes (including fixed instantaneous override minimum tolerance) will provide selective coordination with the branch breakers. Based on previous discussions, as a general rule, typically the minimum frame main electronic trip MCCB that could be utilized would be 600 A frame (available fault current at If_2 divided by 13 rounded to next larger standard frame size). Based on manufacturer's specific data, a smaller frame may be able to be applied. It should be noted that at a lower voltage, say 208Y/120 volt versus 480Y/277 volts there is a greater fault current reduction for the same length conductor.

Eaton Electrical Inc.
1000 Cherrington Parkway
Moon Township, PA 15108
United States
tel: 1-800-525-2000
www.EatonElectrical.com

Note: Whenever sizing conductors, besides selective coordination considerations, voltage drop and NEC or local code de-rating factors have to be considered.

C. Utilize Manufacturer's Test Information

Manufacturers, such as Eaton Corporation, provide selective coordination tables between specific line side circuit breakers and load side circuit breakers, for various maximum values of fault current. **[See Appendix Tables 5 & 6.]** These tables are based on circuit breaker test data. It should be noted that in many cases the allowable fault current levels to achieve selective coordination is significantly higher when using the manufacturer's specific test information. This is attributed to the high speed performance of modern molded case circuit breakers which in some cases are marked as being current limiting: "A circuit breaker that does not employ a fusible element and that when operating within its current limiting range, limits the let-through I^2t to a value less than the I^2t of a 1/2-cycle wave of the symmetrical prospective current."[7] In addition, although some molded case circuit breakers may not be formally marked as current limiting, they still begin to open before the first 1/2-cycle peak, inserting arc impedance into the circuit, and thus still reduce the peak let-through current (I_{PL}) with resulting lower I^2t. This current reduction by the downstream breaker reduces the current to a level below the instantaneous override of the upstream breaker, thus providing selective coordination. **[See Figure 4.]**

It should be noted, that the test circuit utilized by manufacturers to confirm selective coordination must be known and reasonable. Eaton's test circuit is similar to the test circuit utilized by UL 489. This test circuit allows for 4 feet of wire on the line side of the line side breaker and 4 feet of wire for the combination of wire from the load side of the upstream breaker through the downstream breaker to the point of the fault. **See Figure 5** for the examples of the test circuit. For each listed combination, the selective coordination test would utilize wire sized based on the trip unit rating for the line and load breakers.

IV. EXAMPLES

The following two examples demonstrate application of the above methods in the design of selectively coordinated systems, and are for illustrative purposes only. They are not meant to represent an actual facility. The discussions refer to breaker settings, all of which have both current and time tolerances which have to be considered, and should be determined from actual circuit breaker time-current curves.

Example 1: Refer to Figure 6: This single line is to illustrate the use of a combination of the above methods to achieve selective coordination. The incoming service is 480Y/277 volts with 100,000 amperes rms symmetrical available fault current from the Utility or local generation. The main breaker M1 is a Low-Voltage Power Circuit breaker, which has both 100 kA interrupting, and short-time current rating. The feeder breakers F1-F6 are also Low-Voltage Power Circuit Breakers, having 85 kA short-time ratings and 100 kA interrupting ratings. The short-time delay for the main breaker M1 is set at 18 cycles. The short-time delay of the feeder breakers F1 through F3 is set at 6 cycles, and at 12 cycles for feeder breaker F4. The feeder breakers F5 and F6 in the elevator switchgear are set for 6 cycles. With proper overload settings (long delay pick-up and long delay time), selective coordination is achieved between main breaker M1 and feeders F1 through F4. It is additionally achieved between feeder F4 and elevator switchgear feeder breakers F5 and F6. Thus, should a fault greater than the short-time pick-up setting of F3 occur on its load side, F3 would open in 6 cycles while the Main circuit breaker M1 would only open if the fault persisted for 18 cycles. Thus selective coordination is achieved. Similarly, should a fault greater than the short-time current pick-up setting of F4 occur on its load side, then F4 would open in 12 cycles, while the Main circuit breaker M1 would only open if the fault persisted for 18 cycles. Again, selective coordination is achieved.

Additionally, should a fault greater than the short-time pick-up setting of F5 occur on its load side, then F5 would open in 6 cycles, while upstream breaker F4 would only open if the fault persisted for 12 cycles. Again, selective coordination is achieved. **[See Figure 7** for time-current curves.]

It should be noted that should a fault occur in the main switchgear's main bus, the main breaker M1 would short-time delay for 18 cycles before opening and clearing the fault condition. However, many of the microprocessor trip units include a feature called Zone Selective Interlocking (ZSI), which is an option requiring communication wiring between breakers. With ZSI wired and active, and with a fault condition on the main bus, the main breaker would open without any intentional delay (approximately 3 cycles instead of 18 cycles), minimizing the arc flash energy and equipment damage. However, with ZSI, should the fault occur on the load side of any of the feeder breakers as previously discussed, the main breaker would continue to remain closed for its 18-cycle short-time delay setting, allowing the downstream breakers closest to the fault to open. Similarly, with ZSI between feeder breaker F4 and elevator breakers F5 and F6, if a fault occurred in the conductors between the main switchgear and the elevator switchgear, then F4 would open without any intentional delay (approximately 3 cycles instead of 12 cycles), minimizing damage to the cables. Thus, with the proper pick-up and delay settings, ZSI allows for maintaining selective coordination while also minimizing damage from faults which occur on the line side of downstream breakers.

Consider now the circuit supplied by feeder F1. Should a fault occur on the load side of one of the 70 A feeder MCCBs in the emergency distribution panelboard, this 70 A MCCB will open in less than a cycle for currents above approximately 600 – 1200 amperes per manufacturer's time-current curves. Feeder F1 is set to short-time delay for 6 cycles up to 85 kA, thus providing selective coordination. The 30 kVA transformers which feeds the branch emergency lighting panelboards and the associated Emergency Panelboards have their secondary main MCCB and branch MCCB selected based on the information from **Appendix Table 3**, thus also providing selective coordination.

Consider now the circuit supplied by feeder F2. In this case, the available fault currents If_3 and if_4 were determined from a coordination study (or can be estimated by use of Tables similar to those of **Appendix Table 4**). Feeder F2 LVPCB will selectively coordinate with the MCCBs in the Critical Distribution Panelboard (CDP). Here the type HLD MCCB will open in one cycle or less for faults above its instantaneous override setting, while feeder F2 remains closed for its short delay of 6 cycles. The HLD type and frame of 600 ampere feeder breakers in CDP, and the EG type of branch breakers in Critical Panel CP, were both chosen to provide selective coordination based on manufacturer data from **Appendix Table 5** for the 14,580 A available fault current at the branch critical panel.

Consider now the circuit supplied by feeder F3. The downstream ATS would be required to have a 6-cycle short circuit withstand rating because that is the short-time delay setting on the upstream feeder F3. If a fault should occur between the load side of the ATS and the line side of the branch devices within the MCC, it would continue for 6 cycles until upstream feeder F3 opens. For the load side devices of critical motor control center with combination HMCP and starters, as

Eaton Electrical Inc.
1000 Cherrington Parkway
Moon Township, PA 15108
United States
tel: 1-800-525-2000
www.EatonElectrical.com

well as the branch MCCBs, they will have 1 cycle or less tripping on fault current while feeder F3 has a 6-cycle short-time delay, again providing selective coordination.

Consider now the circuit supplied by feeder F5. The Elevator Distribution Panelboard EDP has 600 ampere LD breakers with 200 ampere trips feeding the Elevator Panelboard EP-1 which in turn feeds the fused elevator disconnects having J fuses. In this example, selective coordination is not required between the circuit breaker in EP-1 and the associated fused elevator disconnect which it supplies, since the opening of either or both of these devices will result in the opening of only its one associated elevator motor circuit. In fact, it is desirable for the circuit breaker in Elevator Panelboard EP-1 to open (in addition to the fuse opening), in order to prevent single phasing of the elevator motor on overloads and/or fault conditions. Based on the available fault current at EP-1, the type and frame ampere rating of the MCCBs utilized in EDP and EP-1 where selected utilizing a manufacturer's (Eaton Corporation) elevator selective coordination table.
[See Appendix Table 7.]

Example 2: Refer to Figure 8 This single line illustrates a project having 200,000 amperes rms symmetrical available fault current from the utility or local generation. Because of this very high level of available fault current, special care and consideration is required to analyze whether a selectively coordinated system is achieved. The LVPCBs in **Figure 8** are either of the current-limiting type without Limiters, or the type utilizing a combination of a LVPCB with integral or separately mounted Current Limiters (CL). A variety of CLs are available for a given sensor (CT) ampere rating and breaker type. See **Appendix Tables 8** – **10** for a typical chart of breaker/sensor/limiter selection guidelines. These current limiting devices are very fast acting and consideration has to be given to the downstream devices they are supplying. The peak let-through (I_{PL}) and let-through energy (I^2t) in relationship to the available fault current at the downstream device must be considered for all current limiting devices in order to achieve a selectively coordinated system. In addition, for breakers having current limiters the minimum melt time and total clearing time must be considered. With reference to **Figure 8**, when utilizing devices that are current limiting, either:

1. If the available fault current at the load side device is less than that required to melt the line side feeder breaker's current limiter and not exceeding main breaker M1's short-time rating, then "standard" MCCBs (not marked current limiting) can be utilized. Consider Feeder F2, where the available fault current If_3 at Branch Panelboard BP-2 is limited to a value of 12,805 A due to cable impedance [note 4/0 cable was selected in lieu of 3/0 cable because of voltage drop considerations]. The 1200 A F2 current limiter's melt time curve shows that 13,502 A would have to be available for approximately 0.02 seconds for it to melt. At this current level, the magnetic pick-up or fixed instantaneous override of the 150 A breakers in BP-2 is exceeded (13 x 150 = 1950) causing them to operate in less than one cycle (0.016 seconds). Therefore a "standard" downstream branch circuit breaker (not marked current limiting) would open before the upstream current limiter would melt, thus providing selective coordination.

or

2. If the available fault current at the load side device is more than that required to melt the line side feeder breaker's current limiter or exceeds main breaker M1's short-time rating, then current limiting MCCBs must be utilized. The load side device must additionally be evaluated because the I_{peak} and I^2t let-through energy must be low enough to prevent the line side current limiting devices from opening. Now consider Feeder F3, where the available fault current at BP-3 is 100,297 amperes. In this case, type FCL current limiting MCCBs were selected because of their low I_{peak} and I^2t let-through energy. This will provide selective coordination with the 1200 ampere current limiter in Feeder F3.

Consider feeder F1: Combination circuit breakers with current limiters, or current-limiting (marked) circuit breakers, would be required in DP-1 such that the let-through currents and energy would not open feeder F1 breaker or its associated current limiters. Standard breakers (not specifically marked current limiting) having adequate interrupting capacity might have been utilized as Feeders F5 if selective coordination were not considered. However, should a fault occur directly on the load side of a standard (non-marked current limiting) F5 feeder breaker, the F5 breaker would open, but the 1200 ampere Current Limiter in feeder F1might also open, thereby losing selective coordination. In addition, depending on the conductor impedance of feeder conductor FC5 in turn reducing the fault current at BP-1, either standard breakers or current-limiting breakers would be required for the F6 circuit breakers in BP-1 to ensure the current limiter in the line side F5 breaker did not open should a fault occur on the load side of branch breakers F6.

V. CONCLUSION

The 2005 NEC requirements mandate selective coordination for Elevator feeders, Emergency Systems, Legally Required Standby Systems and the essential portion of Healthcare electrical systems. This paper has presented various methods for obtaining selective coordination including: Review of time-current curve information, Proper selection of breaker size and type, Reducing the available fault current, and Utilization of manufacturer's specific test information. Selective coordination utilizing circuit breakers requires more detailed analysis and design techniques, including specific manufacturer's data regarding circuit breaker performance. This puts a larger engineering burden on the design professional. As can be seen from this discussion, circuit breakers can be utilized to provide a selectively coordinated system.

FOOTNOTES

1. NEC 2005 NFPA 70: National Electrical Code International Electrical Code Series. The National Electrical Code and NEC are registered trademarks of the National Fire Protection Association, Quincy, MA.
2. IEEE Std 1015-1997 Page 11 Paragraph 2.1.25. UL is a registered trademark of Underwriters Laboratories, Northbrook, IL.
3. Ibid Page 14 Paragraph 2.1.54.
4. Ibid Page 63 Paragraph 3.40.
5. UL 489-1991.
6. Eaton Corp *Cutler-Hammer Consulting Application Guide* 13th edition, Page 1.4-7 Table 1.4-3.
7. IEEE Std 1015-1997 Page 146 Paragraph 6.4.

Eaton Electrical Inc.
1000 Cherrington Parkway
Moon Township, PA 15108
United States
tel: 1-800-525-2000
www.EatonElectrical.com

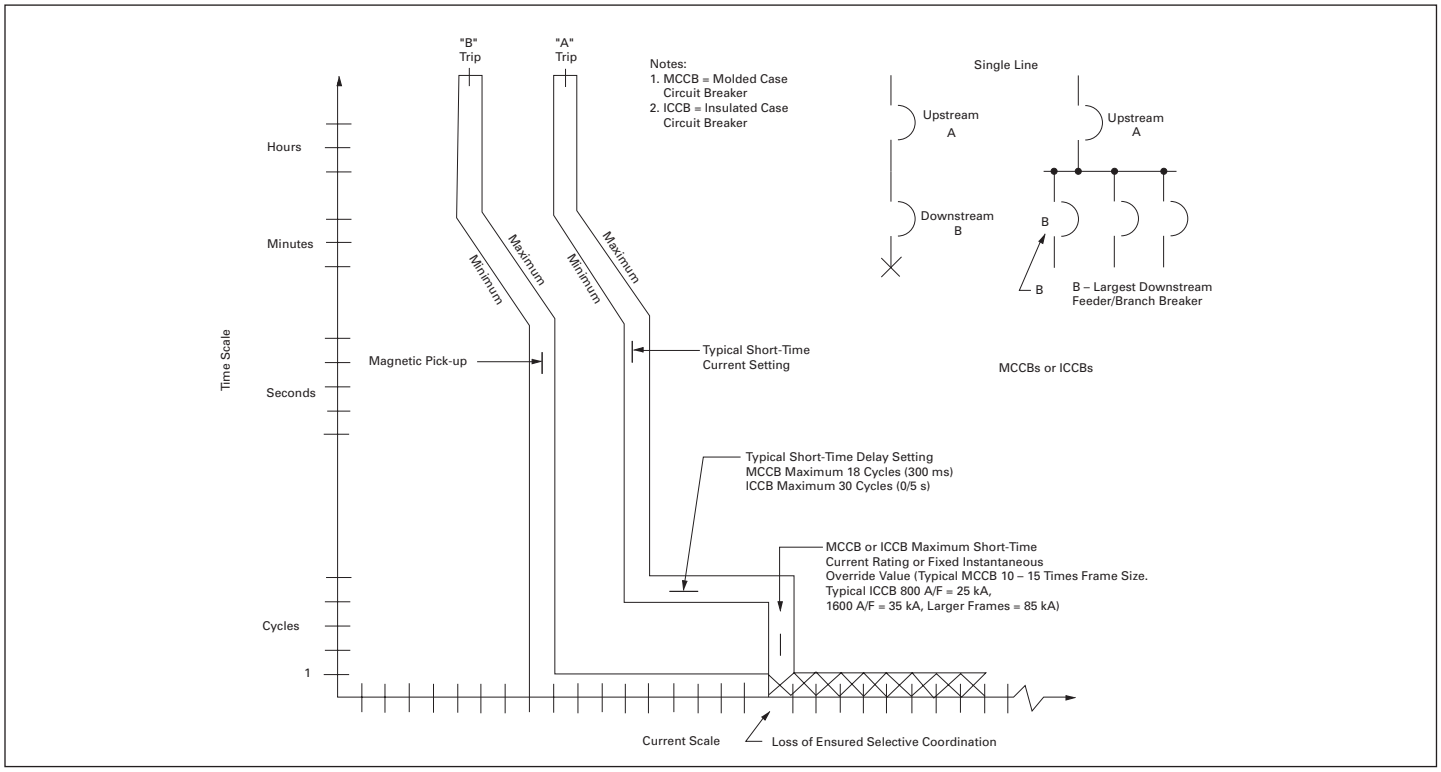

FIGURE 1A. LOSS OF ENSURED SELECTIVE COORDINATION

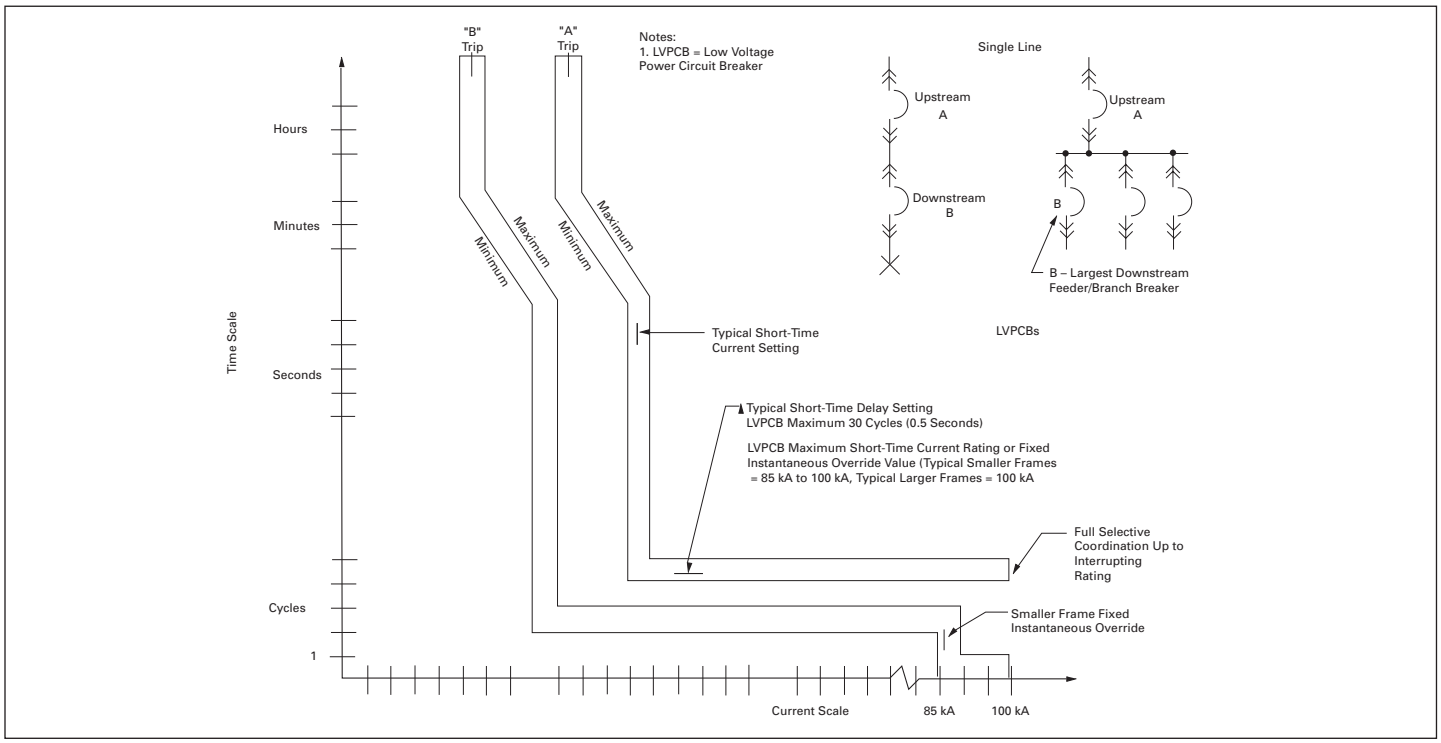

FIGURE 1B. FULL SELECTIVE COORDINATION

Eaton Electrical Inc.
1000 Cherrington Parkway
Moon Township, PA 15108
United States
tel: 1-800-525-2000
www.EatonElectrical.com

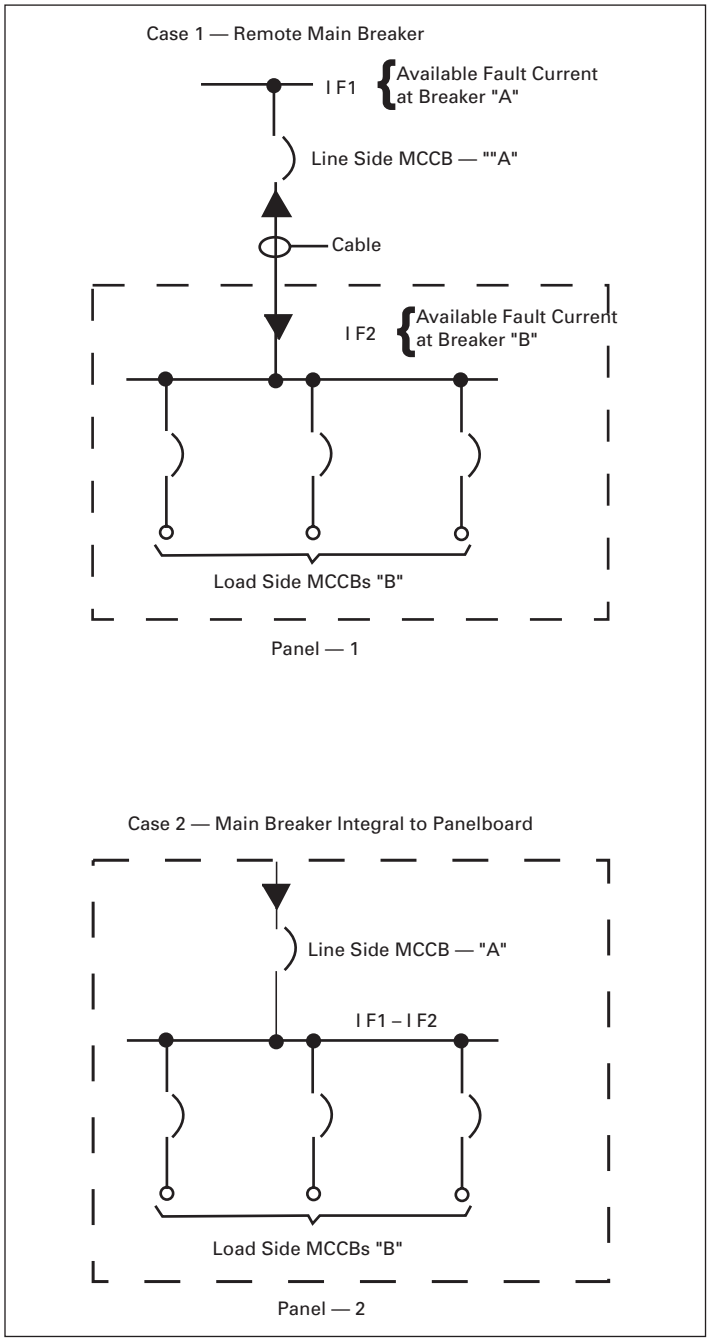

FIGURE 2. SELECTIVE COORDINATION BETWEEN LINE SIDE MCCB — "A" AND LOAD SIDE MCCB — "B"

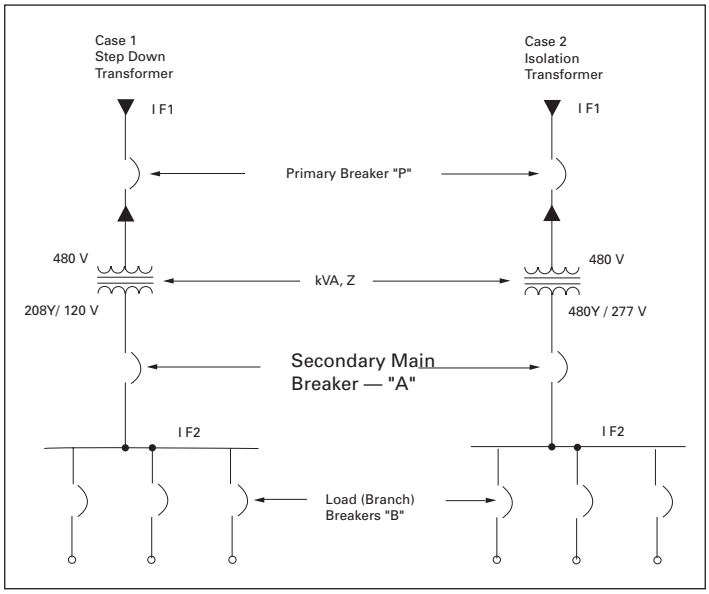

FIGURE 3. UTILIZATION OF TRANSFORMERS TO REDUCE FAULT CURRENT LEVELS

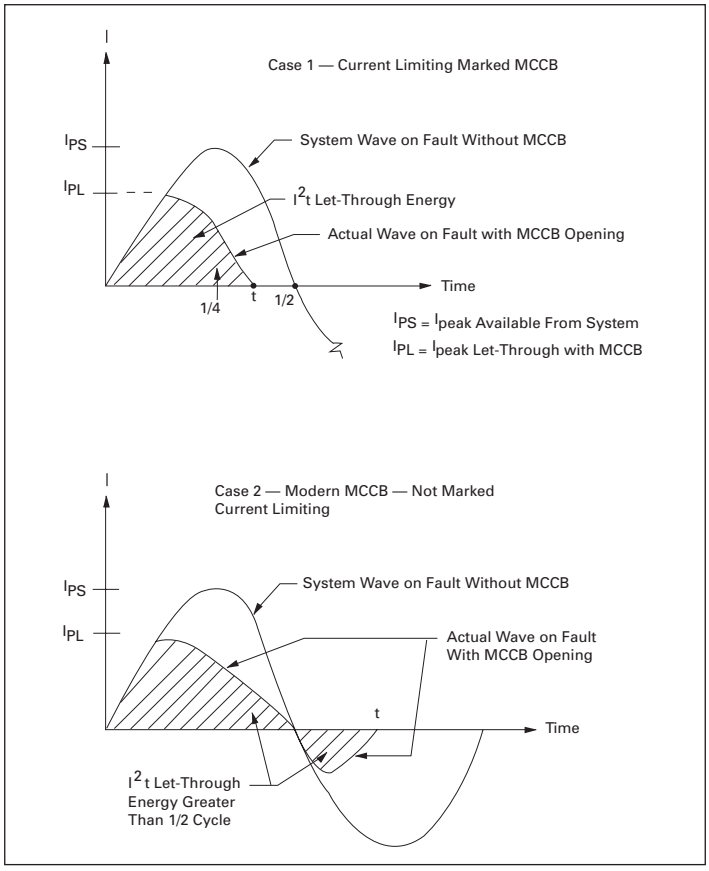

FIGURE 4. CURRENT LIMITING EFFECTS OF MODERN MCCBs

Eaton Electrical Inc.
1000 Cherrington Parkway
Moon Township, PA 15108
United States
tel: 1-800-525-2000
www.EatonElectrical.com

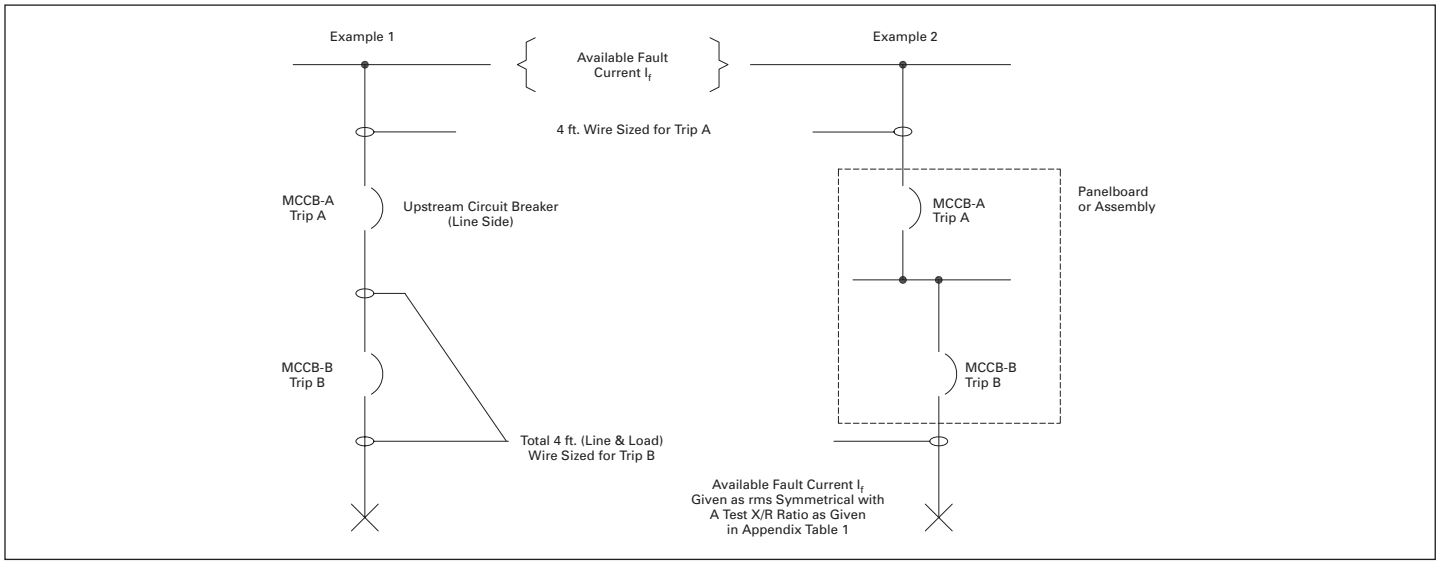

FIGURE 5. TEST CIRCUIT FOR SELECTIVE COORDINATION

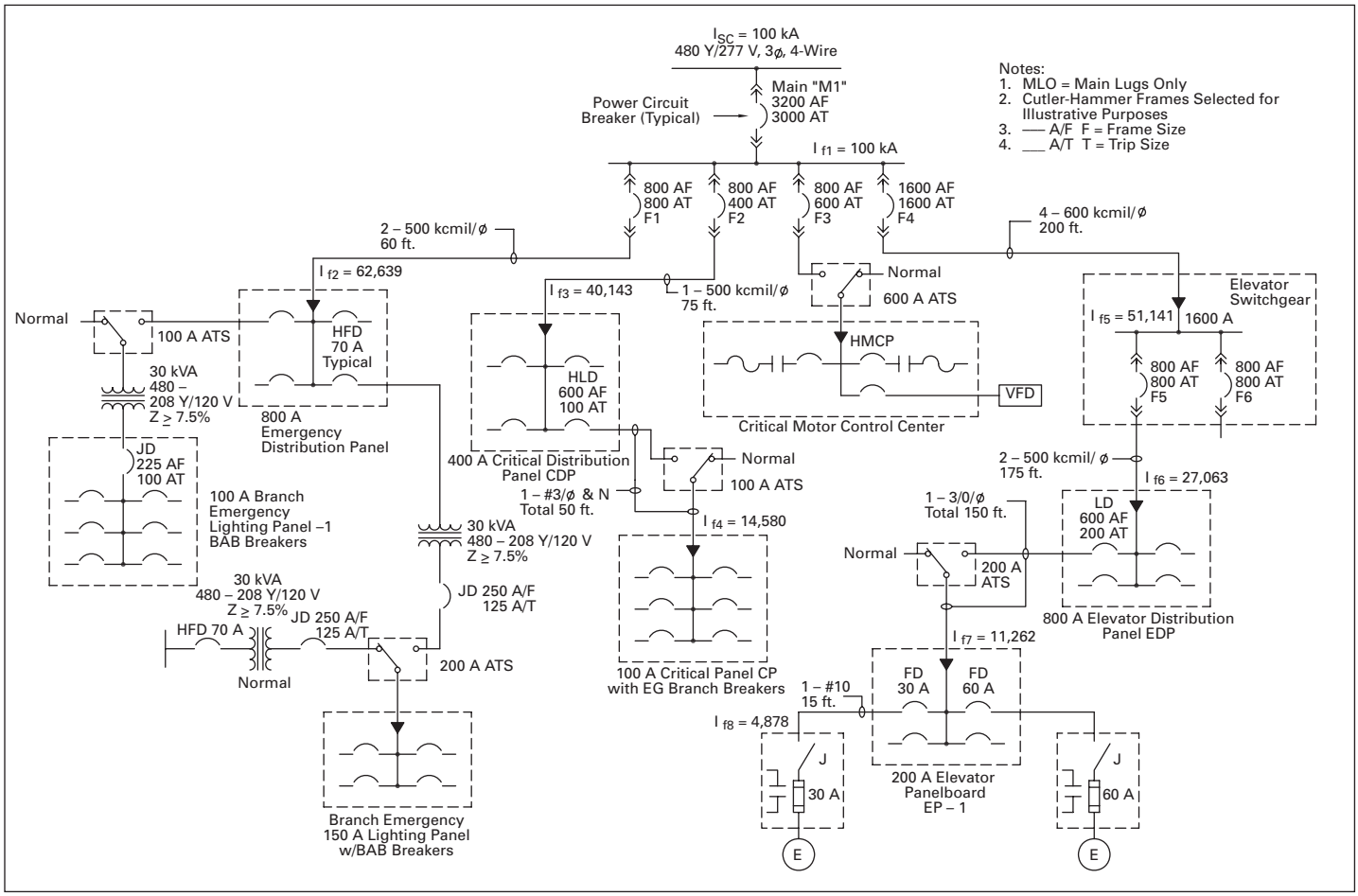

FIGURE 6. EMERGENCY/CRITICAL/ELEVATOR PARTIAL SINGLE-LINE

Eaton Electrical Inc.
1000 Cherrington Parkway
Moon Township, PA 15108
United States
tel: 1-800-525-2000
www.EatonElectrical.com

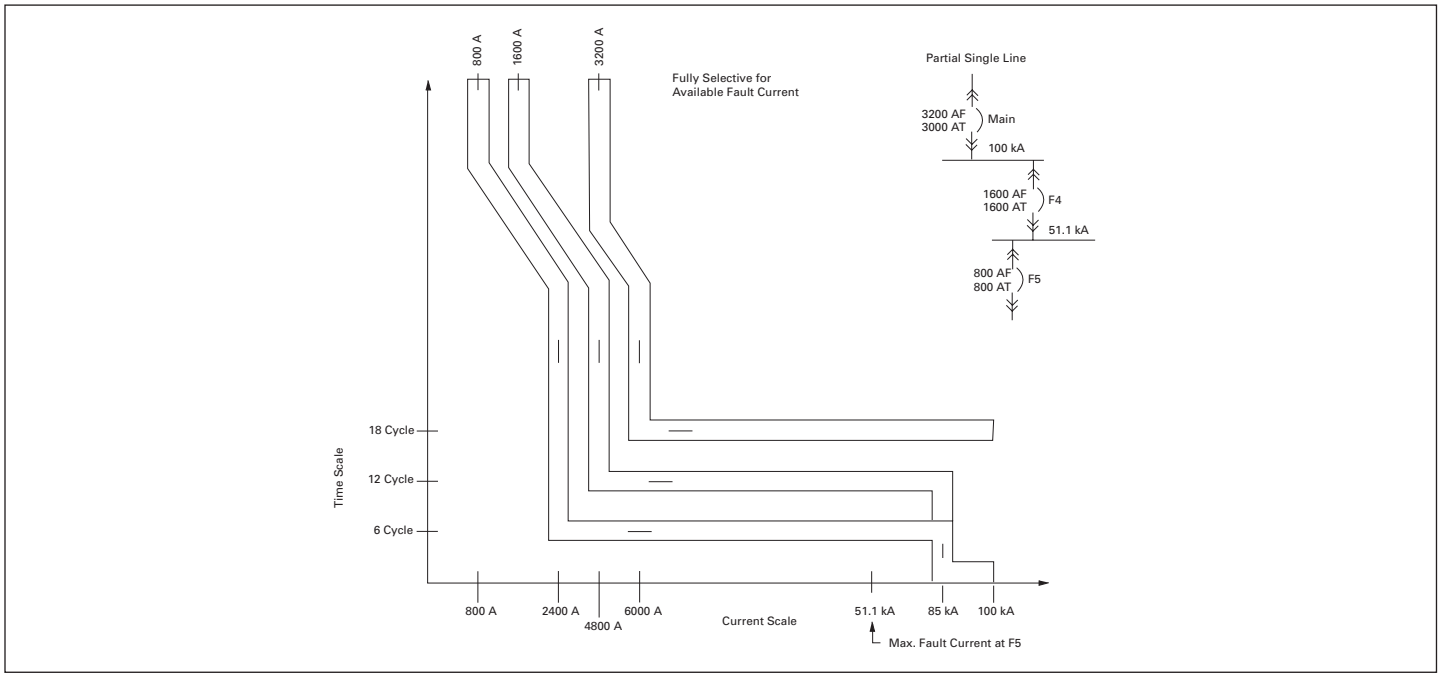

FIGURE 7. LVPCB TIME/CURRENT CURVES FOR FIGURE 6, EXAMPLE 1

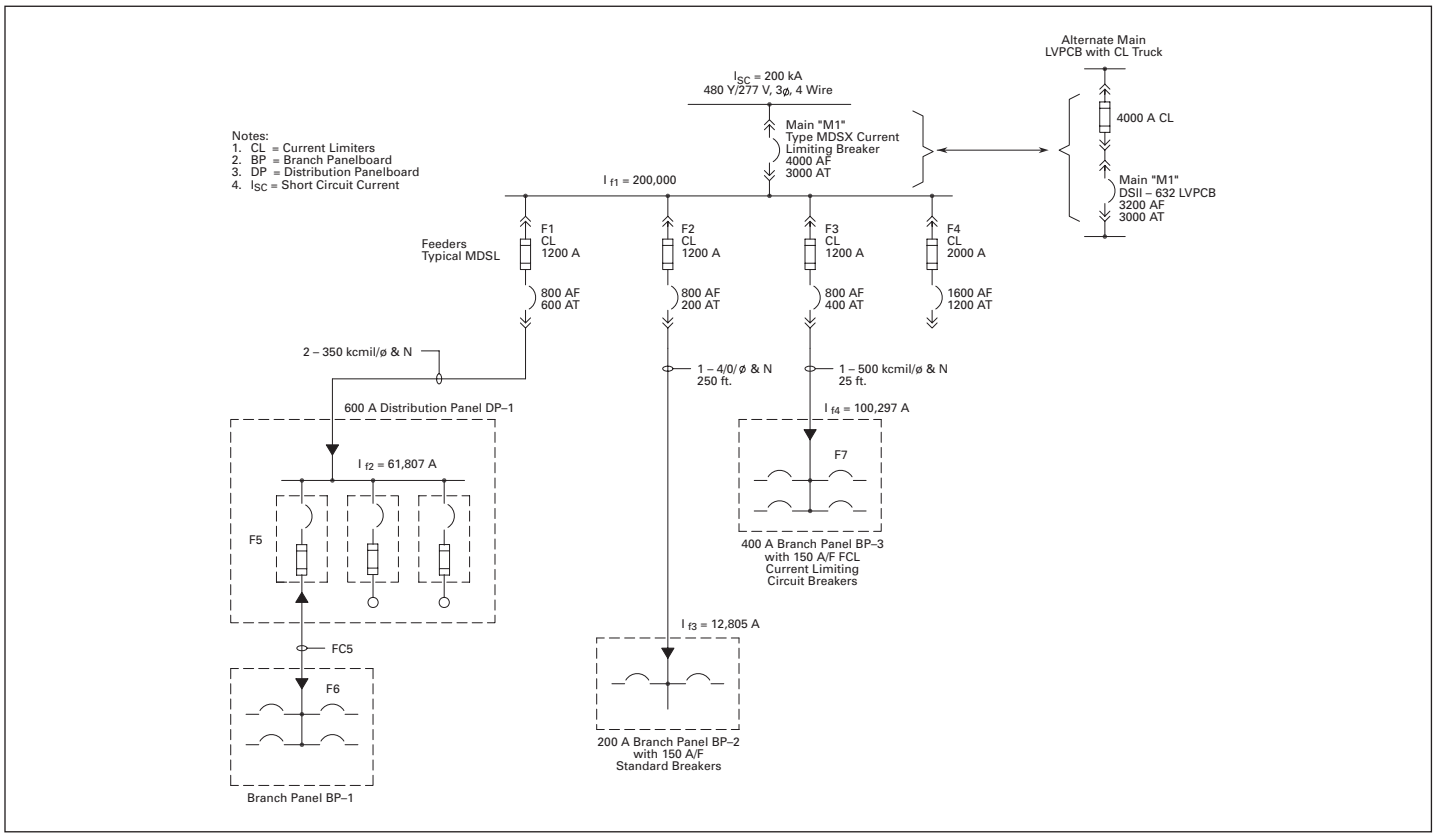

FIGURE 8. SELECTIVE COORDINATION WITH CURRENT LIMITING DEVICES, EXAMPLE 2

Eaton Electrical Inc.
1000 Cherrington Parkway
Moon Township, PA 15108
United States
tel: 1-800-525-2000
www.EatonElectrical.com

VI. APPENDIX TABLES

TABLE 1. TEST CIRCUIT POWER FACTORS

INTERRUPTING RATING KA	PF TEST RANGE	TEST X/R RANGE
MCCBs and ICCBs		
10 or less	0.45 – 0.50	1.98 – 1.73
Over 10 to 20	0.25 – 0.30	3.87 – 3.18
Over 20	0.15 – 0.20	6.6 – 4.9 (MCCB Typical 4.899)
LVPCBs		
ALL	0.15	6.6

TABLE 2. CIRCUIT BREAKER INTERRUPTING RATING DE-RATING FACTORS

SYSTEM %PF	SYSTEM X/R	INTERRUPTING RATING MCCB			LVPCB	
		I ≤ 10 KA	10 KA < I ≤ 20 KA	I > 20 KA	UNFUSED	FUSED
50	1.73	1.000	1.000	1.000	1.000	1.000
30	3.18	0.847	1.000	1.000	1.000	1.000
25	3.87	0.806	0.952	1.000	1.000	1.000
20	4.9	0.763	0.900	1.000	1.000	1.000
15	6.59	0.719	0.847	0.943	1.000	0.935
12	8.27	0.690	0.813	0.909	0.962	0.893
10	9.95	0.671	0.794	0.885	0.935	0.870
7.0	14.25	0.645	0.763	0.847	0.900	0.826
5.0	19.97	0.629	0.740	0.820	0.877	0.793

Note: The values in this table are based upon information extracted from IEEE 1015 (Blue Book). *Applying Low-Voltage Circuit Breakers Used in Industrial and Commercial Power Systems*, Tables 3-24 & 25.

Eaton Electrical Inc.
1000 Cherrington Parkway
Moon Township, PA 15108
United States
tel: 1-800-525-2000
www.EatonElectrical.com

TABLE 3. DETERMINING COORDINATION OF MCCBS UTILIZING COMMON DISTRIBUTION STEPDOWN / ISOLATION TRANSFORMERS

TRANSFORMER					SECONDARY MAIN MCCB				BRANCH BREAKER		
KVA	SECONDARY VOLTAGE	SECONDARY FULL LOAD CURRENT (FLA)	TRANS-FORMER % Z (MIN.) ①	LET-THROUGH AIC (RMS)	MCCB TYPE / FRAME	TRIP UNIT	125% FLA	MCCB TRIP RATING (NEC 450.3(B))	BRANCH TYPE FOR SELECTIVITY ②	MAX. FRAME RATING	MAX. TRIP RATING
15	208Y/120	42	≥3.8	1096	Series C [FDB or FD] (225 A Frame)	Thermal / Magnetic ③	52	60 A	BAB	100 A	≤60 A
30	208Y/120	83	≥7.5	1110	Series C JD (250 A Frame)	Thermal / Magnetic ③	104	125 A	BAB	100 A	<60 A
									[FDB (NIT) & FD (IT)]	225 A	<100 A
30	208Y/120	83	≥3.7	2251	Series C KD-80% CKD-100% (400 A Frame)	Electronic (KES Digitrip RMS 310) ④	104	250 A T.U. Set @ 125 A	BAB	100 A	<60 A
									[FDB (NIT) & FD (IT)]	225 A	<100 A
45	208Y/120	125	≥5.55	2251	Series C KD-80% CKD-100% (400 A Frame)	Electronic (KES Digitrip RMS 310) ④	156	250 A T.U. Set @ 175 A	BAB	100 A	<60 A
									[FDB (NIT) & FD (IT)]	225 A	<100 A
75	208Y/120	208	≥6.15	3385	Series C KD-80% CKD-100% (400 A Frame)	Electronic (KES Digitrip RMS 310) ④	260	400 A T.U. Set @ 300 A	BAB	100 A	≤100 A
									ED, [FDB (NIT) & FD (IT)]	225 A	≤225 A
									Series C JD	250 A	<250 A
112.5	208Y/120	312	≥9.2	3394	Series C KD-80% CKD-100% (400 A Frame)	Electronic (KES Digitrip RMS 310) ④	390	400 A T.U. Set @ 400 A	BAB	100 A	≤100 A
									ED, [FDB (NIT) & FD (IT)]	225 A	≤225 A
									Series C JD	250 A	≤250 A
112.5	208Y/120	312	≥3.15	9913	Series C LD-80% CLD-100% (600 A Frame)	Electronic (LES Digitrip RMS 310) ④	390	600 A T.U. Set @ 400 A	ED, [FDB (NIT) & FD (IT)]	225 A	≤225 A
									Series C JD	250 A	≤250 A
					Series G LG-80%	Electronic (LT Trip Unit)			Series C DK, KD-80% CKD-100%	400 A	<400 A
150	208Y/120	416	≥4.2	9913	Series C LD -80% CLD-100% (600 A Frame)	Electronic (LES Digitrip RMS 310) ④	520	600 A T.U. Set @ 600 A	ED, [FDB (NIT) & FD (IT)]	225 A	≤225 A
									Series C JD	250 A	≤250 A
					Series G LG-80%	Electronic (LT Trip Unit)			Series C DK, KD-80% CKD-100%	400 A	<400 A

① See Eaton's *Consulting Application Guide* for Typical Impedances, Page 19.1 for General Purpose Transformers, 19.2 for TP-1 & K-Factor Transformers, and refer to Eaton for Harmonic Mitigating and specialty transformers.
② IT-Interchangeable Trip, NIT-Non Interchangeable Trip.
③ Magnetic trip set to 10x.
④ Digitrip OPTIM 550 electronic trip unit available.

Eaton Electrical Inc.
1000 Cherrington Parkway
Moon Township, PA 15108
United States
tel: 1-800-525-2000
www.EatonElectrical.com

TABLE 3. DETERMINING COORDINATION OF MCCBS UTILIZING COMMON DISTRIBUTION STEPDOWN / ISOLATION TRANSFORMERS (CONTINUED)

TRANSFORMER					SECONDARY MAIN MCCB				BRANCH BREAKER		
KVA	SECONDARY VOLTAGE	SECONDARY FULL LOAD CURRENT (FLA)	TRANS-FORMER % Z (MIN.) ①	LET-THROUGH AIC (RMS)	MCCB TYPE / FRAME	TRIP UNIT	125% FLA	MCCB TRIP RATING (NEC 450.3(B))	BRANCH TYPE FOR SELECTIVITY ②	MAX. FRAME RATING	MAX. TRIP RATING
150	208Y/120	416	≥2.4	17348	Series C ND-80% CND-100% Series G NGS-80% (1200 A Frame)	Electronic (Digitrip RMS 310) ④	520	1200 A T.U. Set @ 600 A	ED, [FDB (NIT) & FD (IT)]	225 A	≤225 A
									Series C JD	250 A	≤250 A
									Series C DK, KD-80%, CKD-100%	400 A	≤400 A
									Series C LD-80% CLD-100%	600 A	≤600 A
									Series G L630E-80%	600 A	≤600 A
225	208Y/120	625	≥3.5	17844	Series C ND-80% CND-100% Series G NGS-80% (1200 A Frame)	Electronic (Digitrip RMS 310) ④	781	1200 A T.U. Set @ 800 A	ED, [FDB (NIT) & FD (IT)]	225 A	≤225 A
									Series C JD	250 A	≤250 A
									Series C DK, KD-80%, CKD-100%	400 A	≤400 A
									Series C LD-80% CLD-100%	600 A	≤600 A
									Series G L630E-80%	600 A	≤600 A
300	208Y/120	833	>4.7	17717	Series C ND-80% CND-100% Series G NGS-80% (1200 A Frame)	Electronic (Digitrip RMS 310) ④	1041	1200 A T.U. Set @ 1200 A	ED, [FDB (NIT) & FD (IT)]	225 A	≤225 A
									Series C JD	250 A	≤250 A
									Series C DK, KD-80%, CKD-100%	400 A	≤400 A
									Series C LD-80% CLD-100%	600 A	≤600 A
									Series G L630E-80%	600 A	≤600 A
500	208Y/120	1388	≥6.3	22030	Series C RD-80% CRD-100% Series G RGU-80%	Electronic (Digitrip RMS 310) ④	1735	2000 A T.U. Set @ 2000 A	QPHW, QBHW	100 A	≤100 A
			≥1.3	106759					EDC, FDC (2- & 3-Pole Only)	225 A	≤225 A
			≥2.4	57828					JD	250 A	≤250 A
									DK, KD-80%,	400 A	≤250 A
									Series C LD-80% CLD-100%	600 A	≤600 A
									Series G L630E-80%	600 A	≤600 A

① See Eaton's *Consulting Application Guide* for Typical Impedances, Page 19.1 for General Purpose Transformers, 19.2 for TP-1 & K-Factor Transformers, and refer to Eaton for Harmonic Mitigating and specialty transformers.
② IT-Interchangeable Trip, NIT-Non Interchangeable Trip.
③ Magnetic trip set to 10x.
④ Digitrip OPTIM 550 electronic trip unit available.

Eaton Electrical Inc.
1000 Cherrington Parkway
Moon Township, PA 15108
United States
tel: 1-800-525-2000
www.EatonElectrical.com

TABLE 4. REDUCTION IN FAULT CURRENT DUE TO CABLE IMPEDANCE — 480Y / 277 VAC, 3-PHASE ①②

CONDUCTOR SIZE	CABLE LENGTH (FEET) 10	25	50	75	100	150	200	250
Starting Available Fault Current Equals 25,000 Amperes								
#14	6,770	3,233	1,728	1,179	895	604	456	366
#12	9,267	4,767	2,635	1,820	1,391	945	715	575
#10	12,094	6,816	3,946	2,777	2,142	1,470	1,119	903
#8	14,411	8,813	5,349	3,840	2,995	2,080	1,593	1,291
#6	17,074	11,571	7,528	5,579	4,431	3,140	2,431	1,983
#4	19,303	14,386	10,098	7,780	6,327	4,607	3,622	2,984
#3	20,519	16,171	11,951	9,477	7,852	5,847	4,657	3,870
#2	21,014	16,958	12,830	10,319	8,629	6,501	5,215	4,353
#1	21,678	18,076	14,156	11,633	9,873	7,580	6,151	5,175
1/0	22,216	19,036	15,369	12,887	11,095	8,681	7,130	6,049
2/0	22,649	19,848	16,457	14,056	12,266	9,776	8,127	6,953
3/0	23,012	20,559	17,458	15,170	13,412	10,888	9,164	7,911
4/0	23,297	21,137	18,309	16,147	14,443	11,925	10,155	8,842
250 kcmil	23,433	21,419	18,735	16,649	14,980	12,480	10,694	9,356
300 kcmil	23,561	21,689	19,152	17,146	15,521	13,047	11,254	9,894
350 kcmil	23,677	21,935	19,539	17,615	16,036	13,598	11,804	10,428
500 kcmil	23,816	22,237	20,024	18,211	16,700	14,322	12,537	11,148
600 kcmil	23,860	22,333	20,180	18,406	16,918	14,564	12,785	11,393
Starting Available Fault Current Equals 50,000 Amperes								
#14	7,830	3,457	1,790	1,208	911	611	460	369
#12	11,375	5,269	2,781	1,889	1,430	963	726	582
#10	15,952	7,892	4,284	2,940	2,238	1,514	1,145	920
#8	20,247	10,698	5,990	4,159	3,186	2,170	1,645	1,325
#6	25,928	15,056	8,862	6,279	4,862	3,350	2,555	2,065
#4	31,441	20,197	12,654	9,213	7,244	5,074	3,905	3,173
#3	34,800	23,901	15,704	11,694	9,315	6,621	5,136	4,195
#2	36,247	25,660	17,259	13,002	10,429	7,472	5,822	4,769
#1	38,272	28,311	19,746	15,159	12,302	8,934	7,014	5,773
1/0	39,979	30,739	22,191	17,362	14,260	10,505	8,316	6,881
2/0	41,403	32,914	24,532	19,552	16,253	12,152	9,704	8,076
3/0	42,633	34,916	26,824	21,777	18,328	13,920	11,221	9,398
4/0	43,623	36,617	28,886	23,850	20,309	15,660	12,742	10,741
250 kcmil	44,101	37,469	29,961	24,959	21,389	16,631	13,604	11,510
300 kcmil	44,558	38,304	31,042	26,095	22,508	17,654	14,523	12,335
350 kcmil	44,972	39,078	32,072	27,197	23,608	18,678	15,452	13,176
500 kcmil	45,479	40,047	33,399	28,644	25,074	20,071	16,733	14,346
600 kcmil	45,640	40,360	33,837	29,128	25,570	20,550	17,178	14,756
Starting Available Fault Current Equals 75,000 Amperes								
#14	8,261	3,538	1,812	1,218	917	614	461	370
#12	12,309	5,461	2,834	1,913	1,444	969	729	584
#10	17,851	8,330	4,410	2,999	2,272	1,530	1,153	926
#8	23,407	11,520	6,239	4,278	3,255	2,202	1,664	1,337
#6	31,347	16,736	9,419	6,553	5,025	3,426	2,600	2,094
#4	39,780	23,339	13,820	9,816	7,611	5,252	4,009	3,242
#3	45,312	28,431	17,540	12,682	9,931	6,927	5,318	4,315
#2	47,797	30,956	19,503	14,236	11,209	7,864	6,057	4,925
#1	51,382	34,898	22,739	16,864	13,401	9,500	7,358	6,004
1/0	54,507	38,662	26,043	19,635	15,757	11,296	8,804	7,212
2/0	57,188	42,167	29,328	22,483	18,228	13,223	10,375	8,536
3/0	59,561	45,509	32,665	25,475	20,879	15,343	12,128	10,027
4/0	61,511	48,442	35,775	28,359	23,490	17,485	13,925	11,570
250 kcmil	62,466	49,946	37,439	29,941	24,946	18,704	14,961	12,466
300 kcmil	63,387	51,439	39,142	31,591	26,482	20,009	16,079	13,440
350 kcmil	64,229	52,846	40,795	33,220	28,017	21,335	17,226	14,444
500 kcmil	65,268	54,634	42,966	35,405	30,107	23,172	18,834	15,864
600 kcmil	65,599	55,217	43,693	36,148	30,825	23,812	19,399	16,366

① The values in tables are fault amperes available at end of cables.
② Copper, 3 - Single Conductor Cables - Temperature 75°C, in Magnetic Duct & Steel Interlocked Armour.

Eaton Electrical Inc.
1000 Cherrington Parkway
Moon Township, PA 15108
United States
tel: 1-800-525-2000
www.EatonElectrical.com

TABLE 4. REDUCTION IN FAULT CURRENT DUE TO CABLE IMPEDANCE — 480Y / 277 VAC, 3-PHASE (CONTINUED) ①②

CONDUCTOR SIZE	CABLE LENGTH (FEET) 10	25	50	75	100	150	200	250
Starting Available Fault Current Equals 100,000 Amperes								
#14	8,495	3,580	1,823	1,223	920	615	462	370
#12	12,836	5,563	2,861	1,926	1,451	972	731	586
#10	18,980	8,568	4,476	3,029	2,289	1,538	1,158	928
#8	25,387	11,980	6,371	4,340	3,291	2,218	1,673	1,343
#6	35,005	17,724	9,724	6,700	5,110	3,466	2,622	2,109
#4	45,861	25,308	14,487	10,148	7,809	5,345	4,063	3,277
#3	53,374	31,408	18,629	13,242	10,272	7,090	5,414	4,378
#2	56,856	34,517	20,859	14,945	11,644	8,076	6,182	5,007
#1	62,001	39,492	24,604	17,868	14,028	9,811	7,543	6,127
1/0	66,610	44,381	28,519	21,010	16,631	11,738	9,070	7,390
2/0	70,658	49,063	32,506	24,304	19,407	13,833	10,746	8,786
3/0	74,316	53,648	36,656	27,839	22,441	16,170	12,639	10,373
4/0	77,376	57,771	40,618	31,319	25,485	18,567	14,603	12,034
250 kcmil	78,893	59,922	42,778	33,261	27,208	19,948	15,746	13,007
300 kcmil	80,367	62,084	45,016	35,309	29,045	21,439	16,990	14,070
350 kcmil	81,727	64,145	47,215	37,356	30,903	22,968	18,276	15,175
500 kcmil	83,416	66,798	50,148	40,143	33,465	25,111	20,095	16,749
600 kcmil	83,958	67,673	51,141	41,100	34,355	25,865	20,740	17,310
Starting Available Fault Current Equals 150,000 Amperes								
#14	8,742	3,624	1,834	1,228	923	616	463	370
#12	13,409	5,668	2,888	1,938	1,458	975	733	587
#10	20,262	8,820	4,543	3,060	2,307	1,546	1,162	931
#8	27,734	12,478	6,510	4,404	3,327	2,235	1,682	1,349
#6	39,628	18,837	10,050	6,853	5,199	3,507	2,645	2,124
#4	54,137	27,640	15,223	10,504	8,018	5,442	4,119	3,314
#3	64,925	35,081	19,863	13,853	10,636	7,262	5,513	4,443
#2	70,151	39,005	22,417	15,728	12,114	8,299	6,312	5,092
#1	78,153	45,478	26,802	19,000	14,716	10,142	7,737	6,254
1/0	85,620	52,087	31,515	22,592	17,607	12,216	9,352	7,576
2/0	92,427	58,656	36,456	26,447	20,750	14,502	11,146	9,051
3/0	98,788	65,330	41,759	30,687	24,256	17,092	13,195	10,745
4/0	104,269	71,549	46,979	34,970	27,851	19,792	15,351	12,537
250 kcmil	107,043	74,878	49,892	37,409	29,922	21,369	16,619	13,596
300 kcmil	109,775	78,285	52,963	40,019	32,159	23,089	18,010	14,763
350 kcmil	112,327	81,590	56,034	42,670	34,452	24,872	19,461	15,984
500 kcmil	115,542	85,932	60,214	46,344	37,667	27,405	21,538	17,740
600 kcmil	116,585	67,673	51,141	41,100	34,355	25,865	20,740	17,310
Starting Available Fault Current Equals 200,000 Amperes								
#14	8,872	3,646	1,840	1,230	924	617	463	371
#12	13,716	5,722	2,902	1,944	1,462	977	734	587
#10	20,970	8,951	4,578	3,076	2,316	1,550	1,165	933
#8	29,078	12,743	6,581	4,436	3,346	2,243	1,687	1,352
#6	42,431	19,448	10,221	6,932	5,244	3,527	2,657	2,131
#4	59,506	28,975	15,619	10,691	8,127	5,492	4,148	3,332
#3	72,803	37,259	20,543	14,181	10,828	7,351	5,564	4,476
#2	79,439	41,717	23,287	16,152	12,363	8,416	6,379	5,136
#1	89,857	49,208	28,055	19,621	15,086	10,317	7,839	6,320
1/0	99,872	57,038	33,262	23,476	18,139	12,470	9,501	7,673
2/0	109,257	65,012	38,815	27,666	21,493	14,861	11,357	9,190
3/0	118,258	73,313	44,883	32,341	25,278	17,593	13,491	10,941
4/0	126,201	81,237	50,970	37,135	29,207	20,467	15,754	12,805
250 kcmil	130,287	85,555	54,417	39,896	31,493	22,158	17,092	13,911
300 kcmil	134,357	90,032	58,091	42,879	33,980	24,013	18,567	15,135
350 kcmil	138,200	94,431	61,807	45,936	36,551	25,948	20,113	16,421
500 kcmil	143,099	100,297	66,931	50,223	40,190	28,717	22,340	18,280
600 kcmil	144,702	102,282	68,710	51,731	41,480	29,707	23,140	18,950

① The values in tables are fault amperes available at end of cables.
② Copper, 3 - Single Conductor Cables - Temperature 75°C, in Magnetic Duct & Steel Interlocked Armour.

Eaton Electrical Inc.
1000 Cherrington Parkway
Moon Township, PA 15108
United States
tel: 1-800-525-2000
www.EatonElectrical.com

TABLE 5. BREAKER SELECTION FOR SELECTIVE COORDINATION — MCCB-MCCB

DOWNSTREAM (BRANCH) CB		UPSTREAM (MAIN) MCCB								
	RATING	EG (125 A)	F (225 A)	JG (250 A)	J (250 A)	K (400 A)	L (600 A)	LG (630A)	N (1200 A)	R (2500 A)
All Values in (kA) rms Current Levels at 240 Vac or Less										
BR, BAB, HQP & QC (10 kA)	15	1.2	2.2	4.0	10.0	10	10	10	10	10
	20	1.2	2.2	3.4	5.0	8.0	10	10	10	10
	30	1.2	2.2	3.4	5.0	8.0	10	10	10	10
	40	0.8	2.2	3.4	4.2	6.0	10	10	10	10
	50	0.8	2.2	2.5	4.2	6.0	10	10	10	10
	60	0.8	2.2	2.5	4.2	6.0	10	10	10	10
	70	—	2.2	2.5	4.2	5.0	10	10	10	10
	80	—	2.2	2.5	4.2	5.0	10	10	10	10
	90	—	2.2	2.5	4.2	5.0	10	10	10	10
	100	—	2.2	2.5	4.2	5.0	10	10	10	10
	125	—	—	—	4.2	4.2	10	10	10	10
	150	—	—	—	—	4.2	10	10	10	10
BRH, QPHW, QBHW & QCHW (22 kA)	15	1.2	2.2	4.0	10.0	10	22	22	22	22
	20	1.2	2.2	3.4	5.0	8.0	22	22	22	22
	30	1.2	2.2	3.4	5.0	8.0	22	22	22	22
	40	0.8	2.2	3.4	4.2	6.0	22	22	22	22
	50	0.8	2.2	2.5	4.2	6.0	22	22	22	22
	60	0.8	2.2	2.5	4.2	6.0	22	18	22	22
	70	—	2.2	2.5	4.2	5.0	22	18	22	22
	80	—	2.2	2.5	4.2	5.0	22	18	22	22
	90	—	2.2	2.5	4.2	5.0	22	18	22	22
	100	—	2.2	2.5	4.2	5.0	22	18	22	22
	125	—	—	—	4.2	4.2	18	18	22	22
	150	—	—	—	—	4.2	18	18	22	22

Notes:

- The table indicates the maximum fault current value expressed in kA for which coordination is ensured.
- Dashes (—) indicate "Not Applicable."
- The interrupting rating of the downstream (branch) breakers must be adequate for the appropriate fault current at the installation point (for stand-alone or series combination ratings.)
- Electronic trip units are required on L, N and R frames (mains only) for short time delay function.
- Short time delay settings or magnetic trip settings must be set to properly coordinate for low level faults.

Eaton Electrical Inc.
1000 Cherrington Parkway
Moon Township, PA 15108
United States
tel: 1-800-525-2000
www.EatonElectrical.com

TABLE 5. BREAKER SELECTION FOR SELECTIVE COORDINATION — MCCB-MCCB (CONTINUED)

DOWNSTREAM (BRANCH) CB		UPSTREAM (MAIN) MCCB								
	RATING	EG (125 A)	F (225 A)	JG (250 A)	J (250 A)	K (400 A)	L (600 A)	LG (630 A)	N (1200 A)	R (2500 A)
All Values in (kA) rms Current Levels at 480 Vac or Less										
EG Family	15	1.3	2.2	2.5	2.5	5.6	35	35	65	65
	30	1.3	2.2	2.5	2.5	5.6	35	35	65	65
	50	1.3	1.8	2.3	2.3	5.2	18	18	65	65
	60	1.3	1.8	2.3	2.3	5.2	18	18	65	65
	125	—	1.8	2.3	2.3	5.2	18	18	35	65
F Family	15	—	1.8	2.5	2.5	5.0	12	12	65	65
	40	—	1.8	2.5	2.5	5.0	12	12	65	65
	100	—	1.8	2.3	2.3	3.2	12	12	30	65
	225	—	—	—	—	3.2	12	12	28	65
JG Family	70	—	—	2.3	2.3	3.2	12	12	35	65
	160	—	—	—	—	3.2	12	12	30	35
	250	—	—	—	—	3.2	10	10	25	35
J Family	70	—	—	—	—	3.2	12	12	35	65
	125	—	—	—	—	3.2	12	12	30	65
	250	—	—	—	—	3.2	10	10	25	35
K Family	100	—	—	—	—	—	10	10	22	35
	225	—	—	—	—	—	10	10	22	35
	400	—	—	—	—	—	10	10	22	35
L Family	300	—	—	—	—	—	6	6	18	35
	400	—	—	—	—	—	6	6	18	35
	500	—	—	—	—	—	—	—	18	35
	600	—	—	—	—	—	—	—	18	35
LG Family	300	—	—	—	—	—	6	6	50	50
	400	—	—	—	—	—	6	6	50	50
	500	—	—	—	—	—	—	—	18	50
	630	—	—	—	—	—	—	—	18	50
N Family	800	—	—	—	—	—	—	—	12	15
	1200	—	—	—	—	—	—	—	—	15
	1600	—	—	—	—	—	—	—	—	15

Notes:

- The table indicates the maximum fault current value expressed in kA for which coordination is ensured.
- Dashes (—) indicate "Not Applicable."
- The interrupting rating of the downstream (branch) breakers must be adequate for the appropriate fault current at the installation point (for stand-alone or series combination ratings.)
- Electronic trip units are required on L, N and R frames (mains only) for short time delay function.
- Short time delay settings or magnetic trip settings must be set to properly coordinate for low level faults.

Eaton Electrical Inc.
1000 Cherrington Parkway
Moon Township, PA 15108
United States
tel: 1-800-525-2000
www.EatonElectrical.com

TABLE 6. BREAKER SELECTION FOR SELECTIVE COORDINATION — MAGNUM-MCCB ①

DOWNSTREAM (BRAND) MCCB		UPSTREAM (MAIN) LVPCB																	
		MAGNUM NARROW (42 KA)			MAGNUM STANDARD (42 KA)	MAGNUM NARROW (50 KA)			MAGNUM NARROW (65 KA)				MAGNUM STANDARD (65 KA)						
	RATING	800	1200	1600	800	800	1200	1600	800	1200	1600	2000	800	1200	1600	2000	2500	3000	3200
EG Family	15	T	T	T	T	T	T	T	T	T	T	T	T	T	T	T	T	T	T
	40	T	T	T	T	T	T	T	T	T	T	T	T	T	T	T	T	T	T
	125	T	T	T	T	T	T	T	T	T	T	T	T	T	T	T	T	T	T
F Family	15	T	T	T	T	T	T	T	T	T	T	T	T	T	T	T	T	T	T
	40	T	T	T	T	T	T	T	T	T	T	T	T	T	T	T	T	T	T
	100	T	T	T	T	T	T	T	T	T	T	T	T	T	T	T	T	T	T
	225	T	T	T	T	T	T	T	T	T	T	T	T	T	T	T	T	T	T
JG Family	50	T	T	T	T	T	T	T	T	T	T	T	T	T	T	T	T	T	T
	100	T	T	T	T	T	T	T	T	T	T	T	T	T	T	T	T	T	T
	160	T	T	T	T	T	T	T	T	T	T	T	T	T	T	T	T	T	T
	250	T	T	T	T	T	T	T	T	T	T	T	T	T	T	T	T	T	T
J Family	70	T	T	T	T	T	T	T	T	T	T	T	T	T	T	T	T	T	T
	125	T	T	T	T	T	T	T	T	T	T	T	T	T	T	T	T	T	T
	250	T	T	T	T	T	T	T	T	T	T	T	T	T	T	T	T	T	T
K Family	100	T	T	T	T	T	T	T	T	T	T	T	T	T	T	T	T	T	T
	225	T	T	T	T	T	T	T	T	T	T	T	T	T	T	T	T	T	T
	400	T	T	T	T	T	T	T	T	T	T	T	T	T	T	T	T	T	T
L Family	250	T	T	T	T	T	T	T	T	T	T	T	T	T	T	T	T	T	T
	400	T	T	T	T	T	T	T	T	T	T	T	T	T	T	T	T	T	T
	600	T	T	T	T	T	T	T	T	T	T	T	T	T	T	T	T	T	T
LG Family	250	T	T	T	T	T	T	T	T	T	T	T	T	T	T	T	T	T	T
	400	T	T	T	T	T	T	T	T	T	T	T	T	T	T	T	T	T	T
	630	T	T	T	T	T	T	T	T	T	T	T	T	T	T	T	T	T	T
N Family	800	—	T	T	—	—	T	T	—	T	T	T	—	T	T	T	T	T	T
	1200	—	—	T	—	—	—	T	—	—	—	T	—	—	T	T	T	T	T
	1600	—	—	—	—	—	—	—	—	—	—	—	—	—	—	T	T	T	T
R Family	1600	—	—	—	—	—	—	—	—	—	—	—	—	—	—	②	②	②	②
	2000	—	—	—	—	—	—	—	—	—	—	—	—	—	—	②	②	②	②
	2500	—	—	—	—	—	—	—	—	—	—	—	—	—	—	②	②	②	②

① T = Total Coordination up to the interrupting rating of the main breaker at 480 Vac or less.
② Values have not yet been tested.

Note: Dashes (—) indicate "Not Applicable."

Eaton Electrical Inc.
1000 Cherrington Parkway
Moon Township, PA 15108
United States
tel: 1-800-525-2000
www.EatonElectrical.com

TABLE 6. BREAKER SELECTION FOR SELECTIVE COORDINATION — MAGNUM-MCCB (CONTINUED) ①

DOWNSTREAM (BRAND) MCCB		UPSTREAM (MAIN) LVPCB																			
		MAGNUM STANDARD (85 KA)									MAGNUM NARROW (100 KA)	MAGNUM STANDARD (100 KA)									
	RATING	800	1200	1600	2000	2500	3000	3200	4000	5000	800	800	1200	1600	2000	2500	3000	3200	4000	5000	6000
EG Family	15	—	—	—	—	—	—	—	—	—	—	—	—	—	—	—	—	—	—	—	—
	40	—	—	—	—	—	—	—	—	—	—	—	—	—	—	—	—	—	—	—	—
	125	—	—	—	—	—	—	—	—	—	—	—	—	—	—	—	—	—	—	—	—
F Family	15	T	T	T	T	T	T	T	T	T	T	T	T	T	T	T	T	T	T	T	T
	40	T	T	T	T	T	T	T	T	T	T	T	T	T	T	T	T	T	T	T	T
	100	T	T	T	T	T	T	T	T	T	T	T	T	T	T	T	T	T	T	T	T
	225	T	T	T	T	T	T	T	T	T	T	T	T	T	T	T	T	T	T	T	T
JG Family	50	—	—	—	—	—	—	—	—	—	T	—	—	—	—	—	—	—	—	—	—
	100	—	—	—	—	—	—	—	—	—	T	—	—	—	—	—	—	—	—	—	—
	160	—	—	—	—	—	—	—	—	—	T	—	—	—	—	—	—	—	—	—	—
	250	—	—	—	—	—	—	—	—	—	T	—	—	—	—	—	—	—	—	—	—
J Family	70	T	T	T	T	T	T	T	T	T	T	T	T	T	T	T	T	T	T	T	T
	125	T	T	T	T	T	T	T	T	T	T	T	T	T	T	T	T	T	T	T	T
	250	T	T	T	T	T	T	T	T	T	T	T	T	T	T	T	T	T	T	T	T
K Family	100	T	T	T	T	T	T	T	T	T	T	T	T	T	T	T	T	T	T	T	T
	225	T	T	T	T	T	T	T	T	T	T	T	T	T	T	T	T	T	T	T	T
	400	T	T	T	T	T	T	T	T	T	T	T	T	T	T	T	T	T	T	T	T
L Family	250	T	T	T	T	T	T	T	T	T	T	T	T	T	T	T	T	T	T	T	T
	400	T	T	T	T	T	T	T	T	T	T	T	T	T	T	T	T	T	T	T	T
	600	T	T	T	T	T	T	T	T	T	T	T	T	T	T	T	T	T	T	T	T
LG Family	250	—	—	—	—	—	—	—	—	—	T	—	—	—	—	—	—	—	—	—	—
	400	—	—	—	—	—	—	—	—	—	T	—	—	—	—	—	—	—	—	—	—
	630	—	—	—	—	—	—	—	—	—	T	—	—	—	—	—	—	—	—	—	—
N Family	800	—	T	T	T	T	T	T	T	T	—	—	T	T	T	T	T	T	T	T	T
	1200	—	—	T	T	T	T	T	T	T	—	—	—	T	T	T	T	T	T	T	T
	1600	—	—	—	T	T	T	T	T	T	—	—	—	—	T	T	T	T	T	T	T
R Family	1600	—	—	—	②	②	②	②	②	②	—	—	—	—	②	②	②	②	②	②	②
	2000	—	—	—	②	②	②	②	②	②	—	—	—	—	②	②	②	②	②	②	②
	2500	—	—	—	②	②	②	②	②	②	—	—	—	—	②	②	②	②	②	②	②

① T = Total Coordination up to the interrupting rating of the main breaker at 480 Vac or less.
② Values have not yet been tested.

Note: Dashes (—) indicate "Not Applicable."

Eaton Electrical Inc.
1000 Cherrington Parkway
Moon Township, PA 15108
United States
tel: 1-800-525-2000
www.EatonElectrical.com

TABLE 6. BREAKER SELECTION FOR SELECTIVE COORDINATION — MAGNUM-MCCB (CONTINUED) ①

DOWNSTREAM (BRAND) MCCB		UPSTREAM (MAIN) LVPCB								
		MAGNUM STANDARD CURRENT LIMITING (200 KA)				MAGNUM DOUBLE-WIDE CURRENT LIMITING (200 KA)				
	RATING	800	1200	1600	2000	2000	2500	3000	3200	4000
EG Family	15	T	T	T	T	T	T	T	T	T
	40	T	T	T	T	T	T	T	T	T
	125	T	T	T	T	T	T	T	T	T
F Family	15	T	T	T	T	T	T	T	T	T
	40	T	T	T	T	T	T	T	T	T
	100	T	T	T	T	T	T	T	T	T
	225	T	T	T	T	T	T	T	T	T
JG Family	50	②	②	②	②	T	T	T	T	T
	100	②	②	②	②	T	T	T	T	T
	160	②	②	②	②	T	T	T	T	T
	250	②	②	②	②	T	T	T	T	T
J Family	70	②	②	②	②	T	T	T	T	T
	125	②	②	②	②	T	T	T	T	T
	250	②	②	②	②	T	T	T	T	T
K Family	100	②	②	②	②	T	T	T	T	T
	225	②	②	②	②	T	T	T	T	T
	400	②	②	②	②	T	T	T	T	T
L Family	250	②	②	②	②	T	T	T	T	T
	400	②	②	②	②	T	T	T	T	T
	600	②	②	②	②	T	T	T	T	T
LG Family	250	②	②	②	②	T	T	T	T	T
	400	②	②	②	②	T	T	T	T	T
	630	②	②	②	②	T	T	T	T	T
N Family	800	②	②	②	②	②	②	②	②	②
	1200	②	②	②	②	②	②	②	②	②
	1600	②	②	②	②	②	②	②	②	②
R Family	1600	②	②	②	②	②	②	②	②	②
	2000	②	②	②	②	②	②	②	②	②
	2500	②	②	②	②	②	②	②	②	②

① T = Total Coordination up to the interrupting rating of the main breaker at 480 Vac or less.
② Values have not yet been tested.

Notes:

- The interrupting rating of the downstream (branch) breakers must be adequate for the appropriate fault current at the installation point (for stand-alone or series combination ratings).
- Short time delay settings or magnetic trip settings must be set to properly coordinate for low level faults.

Eaton Electrical Inc.
1000 Cherrington Parkway
Moon Township, PA 15108
United States
tel: 1-800-525-2000
www.EatonElectrical.com

TABLE 7. ELEVATOR CIRCUIT COORDINATION

	FEEDER — MCCB			
MAIN MCCB	**30 A**	**60 A**	**100 A**	**200 A**
All Values Shown in rms (kA) Current Levels at 480 Vac or Less				
FD / HFD ①	FD/HFD 1.8 / 1.8	FD/HFD 1.8 / 1.8	FD/HFD 1.8 / 1.8	FD/HFD NA
JD / HJD ①	FD/HFD 2.5 / 2.5	FD/HFD 2.5 / 2.5	FD/HFD 2.3 / 2.3	FD/HFD 2.3 / 2.3
KD / HKD ②	FD/HFD 5 / 5	FD/HFD 5 / 5	FD/HFD/JD/HJD 3.2 / 3.2 / 3.2 / 3.2	FD/HFD/JD/HJD 3.2 / 3.2 / 3.2 / 3.2
(LD / HLD ②	FD/HFD 12 / 12	FD/HFD 12 / 12	FD/HFD/JD/HJD/KD/HKD 12 / 12 / 12 / 12 / 10 / 10	FD/HFD/JD/HJD/KD/HKD 12 / 12 / 10 / 10 / 10 / 10
LG ②	FD/HFD 12 / 12	FD/HFD 12 / 12	FD/HFD/JD/HJD/KD/HKD 12 / 12 / 12 / 12 / 10 / 10	FD/HFD/JD/HJD/KD/HKD 12 / 12 / 10 / 10 / 10 / 10
HMDL ②	FD/HFD 12 / 12	FD/HFD 12 / 12	FD/HFD/JD/HJD/KD/HKD 12 / 12 / 12 / 12 / 10 / 10	FD/HFD/JD/HJD/KD/HKD 12 / 12 / 10 / 10 / 10 / 10
HND ②	FD/HFD 35 / 65	FD/HFD 35 / 65	FD/HFD/JD/HJD/KD/HKD 30 / 30 / 30 / 30 / 22 / 22	FD/HFD/JD/HJD/KD/HKD 28 / 28 / 25 / 25 / 22 / 22

① Thermal magnetic trip.
② Electronic trip unit.

Notes:

- The table indicates the maximum fault current value expressed in kA for which coordination is ensured.
- The interrupting rating of the downstream (branch) breakers must be adequate for the appropriate fault current at the installation point (for stand-alone or series combination ratings).
- Electronic trip units are required on L and N frames (mains only) for short time delay function.
- Short time delay settings or magnetic trip settings must be set to properly coordinate for low level faults.

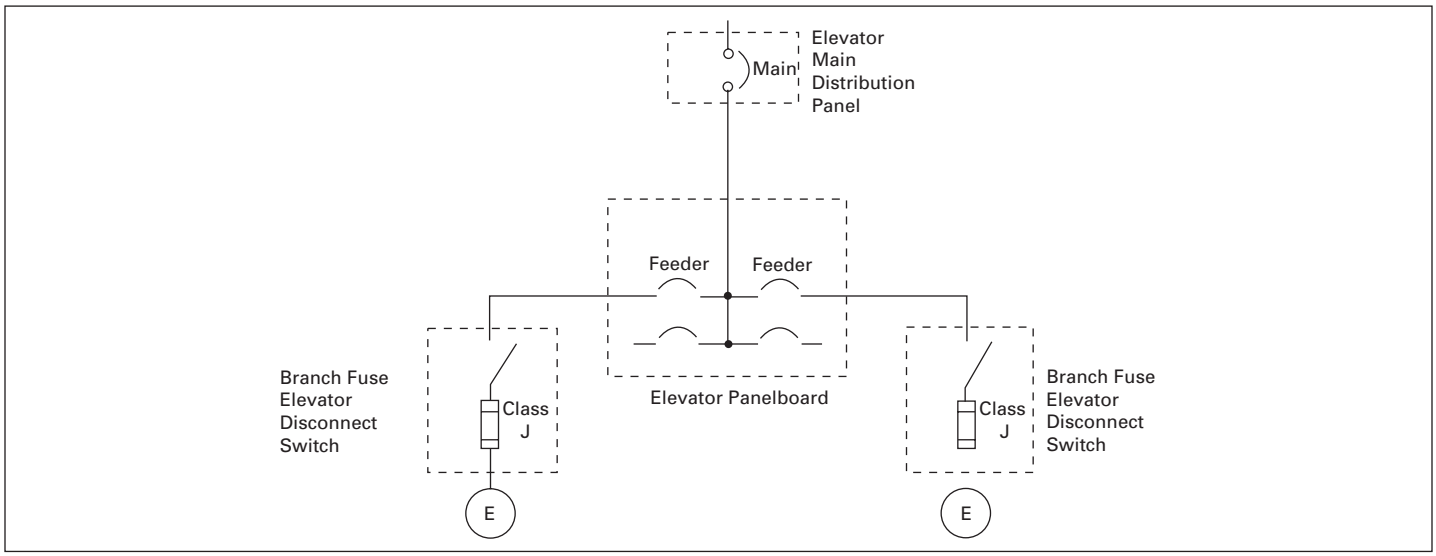

FIGURE 9. ELEVATOR PANELBOARD ELECTRICAL SCHEMATIC

Per the electrical system shown in the one line diagram, any branch Class J fuse can be used downstream from the specified feeder. In this application, selective coordination is NOT required by the NEC between the feeder circuit breaker and the associated downstream branch fused elevator disconnect because the opening of either or both of these devices will result in the opening of ONLY its one associated elevator motor circuit.

Eaton Electrical Inc.
1000 Cherrington Parkway
Moon Township, PA 15108
United States
tel: 1-800-525-2000
www.EatonElectrical.com

TABLE 8. BREAKER/SENSOR/LIMITER SELECTION GUIDELINES — TYPE DSLII POWER CIRCUIT BREAKERS

BREAKER TYPE	SENSOR AMPERE RATING	LIMITER RATING AMPERES		
		MINIMUM	NORMAL	MAXIMUM
DSLII-308	200	250	1200	2000
DSLII-308	300	400	1200	2000
DSLII-308	400	600	1200	2000
DSLII-308	600	800	1200	2000
DSLII-308	800	1200	1600	2000
DSLII-516	600	800	2000	3000
DSLII-516	800	1000	2000	3000
DSLII-516	1200	2000	2500	3000
DSLII-516	1600	—	3000	—
DSLII-620	2000	—	3000	—
DSLII-632	2400 & 3200	—	2500 – 4000	—
DSLII-840	3200 & 4000	—	2500 – 5000	—

Notes:

- Based on Eaton's Cutler-Hammer equipment.
- Minimum limiter rating is used only when protection of downstream equipment is required. Not completely coordinated with breaker to avoid nuisance blowing.
- Normal rating — lowest rating that can typically be coordinated with breaker to avoid nuisance blowing.
- Highest available rating for protection of breaker only.

TABLE 9. BREAKER/SENSOR/LIMITER SELECTION GUIDELINES — MAGNUM DSL

MAGNUM DSL BREAKER CONTINUOUS CURRENT FRAME RATING ①				SENSOR & RATING PLUG I_n	MDSL CURRENT LIMITER SELECTION ②									
					MINIMUM ③			RECOMMENDED ④					MAXIMUM ⑤	
800 A	1200 A	1600 A		200	250 A	300 A	400 A	600 A	800 A	1200 A	1600 A	2000 A	2500 A	3000 A
800 A	1200 A	1600 A		250			400 A	600 A	800 A	1200 A	1600 A	2000 A	2500 A	3000 A
800 A	1200 A	1600 A		300			400 A	600 A	800 A	1200 A	1600 A	2000 A	2500 A	3000 A
800 A	1200 A	1600 A		400				600 A	800 A	1200 A	1600 A	2000 A	2500 A	3000 A
800 A	1200 A	1600 A		600					800 A	1200 A	1600 A	2000 A	2500 A	3000 A
800 A	1200 A	1600 A		800						1200 A	1600 A	2000 A	2500 A	3000 A
	1200 A	1600 A		1000							1600 A	2000 A	2500 A	3000 A
	1200 A	1600 A		1200								2000 A	2500 A	3000 A
		1600 A	2000 A	1600										3000 A
			2000 A	2000										3000 A ⑥

① Select the Magnum breaker frame, then the current sensor and rating plug, and finally the current limiter. Current limiters are mounted integral to circuit breaker. Refer non-automatic MDSL breaker application requests to Eaton.
② Refer to MDSL current limiter curves for let-through and time characteristics.
③ The minimum selection provides for lowest current let-through, but trip unit settings must be considered to avoid nuisance operation.
④ The recommended selection avoids nuisance limiter operation and allows for system coordination within the trip unit settings while minimizing let-through.
⑤ The maximum selection provides for maximum system coordination with let-through characteristics per the limiter selected.
⑥ Heat sinks applied in conjunction with current limiters on this breaker rating.

Eaton Electrical Inc.
1000 Cherrington Parkway
Moon Township, PA 15108
United States
tel: 1-800-525-2000
www.EatonElectrical.com

TABLE 10. MAGNUM TYPE MDSX CURRENT LIMITING LINE SIDE BREAKERS (WITHOUT CURRENT LIMITERS) COMBINATIONS PROVIDING SELECTIVE COORDINATION UP TO 200,000 A

LINE SIDE MDSX FRAME AMPERE RATING	LOAD SIDE MDSL BREAKER FRAME	MAXIMUM MDSL LOAD LIMITER
3200 A through 5000 A	800 A & 1600 A	2000 A ①

① 2000 A limiter rating when used with 1600 A or above sensor/rating plug should be used only when protection of downstream equipment is required. Not completely coordinated with breaker to avoid nuisance blowing.

BIOGRAPHIES

CHARLES J. NOCHUMSON, PE — NATIONAL APPLICATION ENGINEER

Charles J. Nochumson is an Application Engineer for Eaton Corporation and was previously an Application Engineer with Westinghouse Electric Corporation in their Distribution and Control Business Unit for 29 years. Mr. Nochumson is co-author of an IEEE paper on "Transfer Considerations in Standby Generator Application," author of a TAPPI and IEEE paper on "Application of New Technologies in Power Circuit Breakers with Higher Interrupting Capacity and Short Time Ratings." Chuck has written and presented a paper at the IEEE/IAS Pulp & Paper 2001 Conference on "Considerations in Application and Selection of Unit Substation Transformers" which was selected for publication in IEEE Transactions. He has also been a guest speaker for Plant Services magazine and the International Association of Electrical Inspectors-Chicago Division. He has written an article on "Basic Electrical Distribution Systems" for *Electrical Distributor* magazine and also authored articles in *Plant Engineering* magazine. In addition, Chuck has been a speaker numerous times at Chicago IEEE-IAS meetings on a variety of technical topics and has been an instructor at their yearly February Technical Seminars. In addition he has been a past speaker at IAEI Chicago Division meetings, latest topic on Motor Protection. Besides providing technical and application information on Cutler-Hammer products for consulting and design engineers, he provides technical direction for the committee that publishes Eaton's *Consulting Application Guide* and its *Product Specification Guide*. Mr. Nochumson is a Professional Engineer and Senior Member of IEEE, as well as an Associate Member of IAEI. He was indoctrinated into the Chicago Electric Association Hall of Fame in 2005. He is presently located in Phoenix as Eaton's National Application Engineer.

KEVIN J. LIPPERT — MANAGER OF CODES & STANDARDS

Kevin J. Lippert is the Manager, Codes & Standards with Eaton in Pittsburgh, PA. He began his career in 1986 with Westinghouse Electric Corp., which was acquired by Eaton Corp. (1994). He is heavily involved with the National Electrical Manufacturer's Association and has held Chairmanships of several NEMA Low Voltage Distribution Equipment committees. He is a member of several Underwriters Laboratories (UL) Standards Technical Panels (STP) and is a U.S. Representative to several International Electrotechnical Commission (IEC) Subcommittees. Kevin is an alternate member of National Electrical Code Making Panel 8. He has published industry articles, IEEE White Papers, and is a Senior member of IEEE.

Cutler-Hammer is a federally registered trademark of Eaton Corporation.

© 2006 Eaton Corporation
All Rights Reserved
Printed in USA
Publication No. IA01200001E / Z4477
May 2006