Carter® Brand
Bottom Loading Adapters

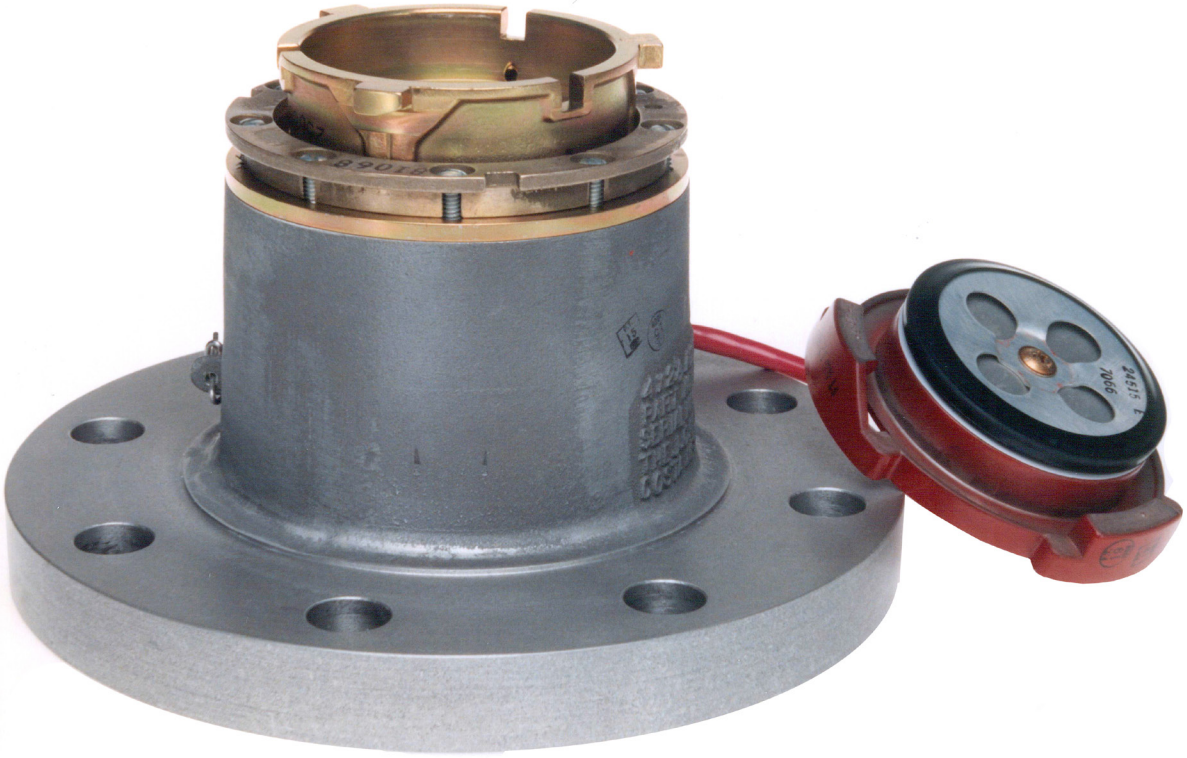

Powering Business Worldwide

Model 6958	Model 61272	Model 61528	Model 64040
Model 60195	Model 61409	Model 61529	Model 64373
Model 60373	Model 61527	Model 61531	

Eaton's Carter brand 2-½ inch aircraft standard bayonet refueling adapters mate underwing nozzles or 2-½ inch hydrant couplers, with several choices of flanged or threaded inlets. The bayonet adapter is also available as a stand-alone module, without a housing — see details in "Ordering Data" section on page 4. These adapters are designed to be used for bottom loading of a refueler, for connection to a hydrant system or tank farm pumping system for test adapters, or for use in a recirculation test system on refuelers. Choose the correct adapter for the application.

There are two basic methods of manufacturing the standard aircraft bayonet adapter module:

- The older MS29514 style aircraft adapter flange utilizes a nine hole mounting pad, built in separate pieces instead of a self contained module. It is taller (between the mounting flange and the bayonet lugs) and is therefore stronger. This type of flange is suitable for product selection and, being stronger, is suited for hydrant applications.
- The newer MS24484 style aircraft adapter is a self-contained module that uses a six bolt mounting pad for countersunk screws. As a consequence, the mating connection is not as strong as the MS29514 type. The construction and the height between the mounting flange and the bayonet lugs is shorter. Product selection is not feasible for use on this type of flange. The lower joint strength also makes it non-suitable for hydrant applications. It is quite suitable for bottom loading and recirculation applications.
- The MS24484 type adapter module is available as either the military QPL (Qualified Products List) as MS24484-5 or the older MS24484-2. The MS24484-5 is qualified to be used at higher and lower temperatures and has a higher strength bayonet flange. The MS24484-2 is suitable for most commercial applications. The MS24484-5 is only available from those companies listed on the QPL. Although Model 61529 is made in accordance with MS24484-2 requirements, it is not sold as an air worthy unit and should not be utilized on an aircraft application.

Eaton offers a choice of outlet flanges made to mate ANSI 150 flanges or TTMA flanges for the three and four inch styles. The 2-½ inch outlet styles are available only in threaded connections, either NPT or BSPP. The ANSI type flanged units are more suited for hydrant applications (along with the MS29514) while the TTMA units are suited for bottom loading or recirculation systems. The 2-½ inch units are (by choosing the correct unit) usable in either application.

A choice of either a plastic dust cap or a metal military style sealing cap is also offered as an option on all adapters except Model 61529 aircraft adapter. The metal sealing cap is available as Model 61531. This cap, although made in accordance with MS29526-2, is not a QPL item and is not qualified for use on an aircraft.

Features

- Available with 3 inch & 4 inch 150 lb. ANSI or TTMA inlet flanges or 2-½ inch NPT or BSPP threaded inlets
- Military QPL MS24484-5 adapter available as an option
- Units for use with product selection available
- Plastic or military metal sealing caps available
- Convenient bosses to mount pressure gauges or sampling ports standard on many models
- Low cost MS24484-2 modular unit available
- Pressure equalization valve offered in poppet for hydrant applications

Model 6958
Fueling Adapter

Model 61272
Bottom Loading Adapter

Model 61531
Military Style Sealing Cap

Model 61529
Aircraft Adapter

The various models offered are available with the options shown in the tables below.

Model 64373

3 inch 125/150 lb. ANSI flat faced flange x 2-½ inch bayonet

Product selection positions 4-6 available. Weight 5.8 lbs (2.631 kg).

Option	Description	Comments	Weight lb	Weight kg
*A	Adds product selection (4,5,6)	In Lieu of option F	+0.4	.181
*B	Adds pressure relief valve	In lieu of option E	+0.0	
C	Adds pressure cap	In lieu of option D	+0.5	.227
D	Adds plastic cap	In lieu of option C	+0.1	.045
*E	Adds standard poppet (no relief valve)	In lieu of option B	+0.0	
*F	No product selection	In lieu of option A (for bottom loading application use Model 61409)	+0.0	

* Options A or F & B or E must be specified to achieve a completed part number

Model 64040

3 inch ANSI flange x 2-½ inch bayonet

No product selection (use for bottom loading only)

Option	Description	Comments	Weight lb	Weight kg
A	Adds pressure dust cap	In lieu of option B	+0.5	.227
B	Adds plastic dust cap	In lieu of option A	+0.1	.045

Model 61528

3 inch TTMA flange x 2-½ inch bayonet

No product selection (use for bottom loading only). Weight 3.3 lbs (1.497 kg).

Option	Description	Comments	Weight lb	Weight kg
A	Adds pressure dust cap	In lieu of option B	+0.5	.227
B	Adds plastic dust cap	In lieu of option A	+0.1	.045
*C	Commercial MS24484-2 adapter	In lieu of option D	+0.0	0.0
*D	Mil-spec MS24484-5 adapter	In lieu of option C	+0.0	0.0

* Options "C" or "D" must be specified to achieve a completed part number

Model 6958

2-½ inch outlet x 2-½ inch bayonet

No product selection (use for bottom loading or recirculation only). Weight 2.9 lbs (1.315 kg).

Option	Description	Comments	Weight lb	Weight kg
A	Adds pressure dust cap	In lieu of option B	+0.5	.227
B	Adds plastic dust cap	In lieu of option A	+0.1	.045
*C	Commercial MS24484-2 adapter	In lieu of option D	+0.0	0.0
*D	Mil-spec MS24484-5 adapter	In lieu of option C	+0.0	0.0
*G	Adds 2-½ inch - 8 NPT female outlet	In lieu of option H	+0.0	0.0
*H	Adds 2-½ inch BSPP female Outlet	In lieu of option G	+0.0	0.0

* Options C or D & G or H must be specified to achieve a completed part number

Model 60195

2-½ inch outlet x 2-½ inch bayonet

product selection positions 4-6 standard. Weight 3.3 lbs (1.497 kg)

Option	Description	Comments	Weight lb	Weight kg
A	Deletes product selection		-0.4	.181
B	Adds pressure relief valve	In lieu of option F	+0.0	0.0
*C	Adds pressure cap	In lieu of option J	+0.5	.227
*D	Adds standard poppet (no relief valve)	In lieu of option B	+0.0	0.0
*G	Adds 2-½ inch — 8 NPT female outlet	In lieu of option H	+0.0	0.0
*H	Adds plastic cap	In lieu of option E	+0.1	.045

* Options B or F & G or H must be specified to achieve a completed part number

Ordering Data

Model 61247

Modular fueling adapter in accordance with MS24484-5

Option	Description	Comments	Weight lb	Weight kg
61247	Modular adapter — MS24484-5	Qualified military unit	0.9	.408

Model 61529

Modular fueling adapter in accordance with MS24484-2

Use for bottom loading only. Not for airplane use. Weight 0.9 lb (.408 kg).

Option	Description	Comments	Weight lb	Weight kg
A	Adds pressure dust cap	In lieu of option B	+0.5	.227
B	Adds plastic dust cap	In lieu of option A	+0.1	.045
C	Adds mounting flange O-ring and screws			
Z	Adds mounting flange O-ring		+0.0	0.0

Model 61531

Pressure cap in accordance with MS29526-2

Option	Description	Comments	Weight lb	Weight kg
61531	Pressure dust cap — MS29526-2	Not for airplane use	0.5	.227

Model 60373

4 inch 125/150 lb. ANSI flat faced Flange x 2-½ inch bayonet

Product selection positions 4-6 available. Weight 7.4 lbs (3.356 kg).

Option	Description	Comments	Weight lb	Weight kg
*A	Adds product selection (4, 5 & 6)	In lieu of option F	+0.4	.181
*B	Adds pressure relief Valve	In lieu of option E	+0.0	0.0
C	Adds pressure cap	In lieu of option D	+0.5	.227
D	Adds plastic cap	In lieu of option C	+0.1	.045
*E	Adds standard poppet (no relief valve)	In lieu of option B	+0.0	0.0
*F	No product selection	In lieu of option A	+0.0	0.0

* Options A or F & B or E must be specified to achieve a completed part number

Model 61409

4 inch 150 lb. ANSI flat faced flange x 2-½ inch bayonet

No product selection (use for bottom loading only). Weight 6.9 lbs. (3.133 kg).

Option	Description	Comments	Weight lb	Weight kg
A	Adds pressure dust cap	In lieu of option B	+0.5	.227
B	Adds plastic dust cap	In lieu of option A	+0.1	.045
*C	Commercial MS24484-2 adapter	In lieu of option D	+0.0	0.0
*D	Mil-spec MS24484-5 adapter	In lieu of option C	+0.0	0.0

* Options C or D must be specified to achieve a completed part number

Model 61272

4 inch TTMA flange x 2-½ inch bayonet

No product selection (use for bottom loading only). Weight 3.6 lbs (1.633 kg).

Option	Description	Comments	Weight lb	Weight kg
A	Adds pressure dust cap	In lieu of option B	+0.5	.227
B	Adds plastic dust cap	In lieu of option A	+0.1	.045
*C	Commercial MS24484-2 adapter	In lieu of option D	+0.0	0.0
*D	Mil-spec MS24484-5 adapter	In lieu of option C	+0.0	0.0

* Options C or D must be specified to achieve a completed part number

Dimensions shown in inches (millimeters)

MODEL 60373

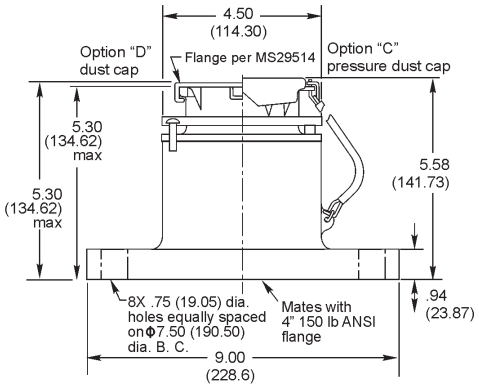

MODEL 64373

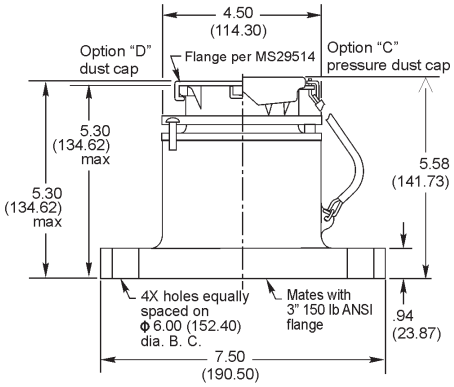

MODEL 61409

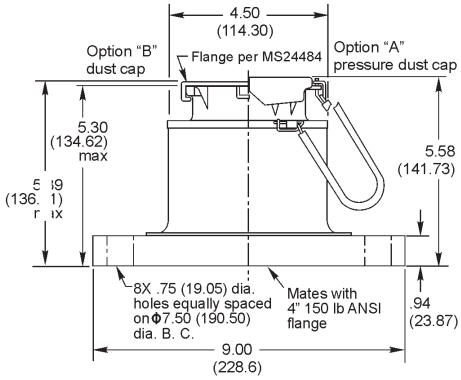

MODEL 64040

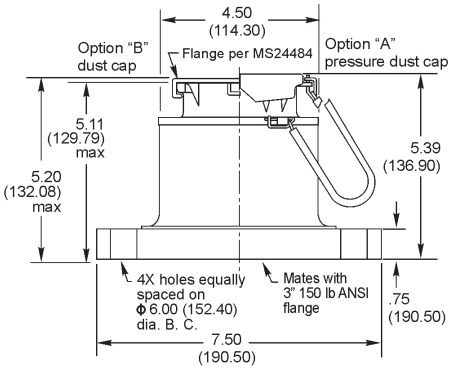

MODEL 6958

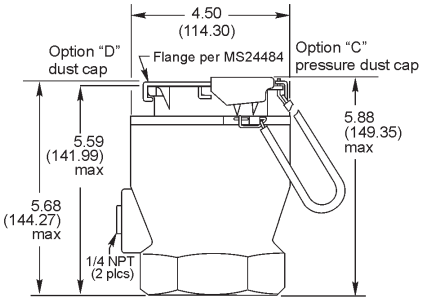

MODEL 60195

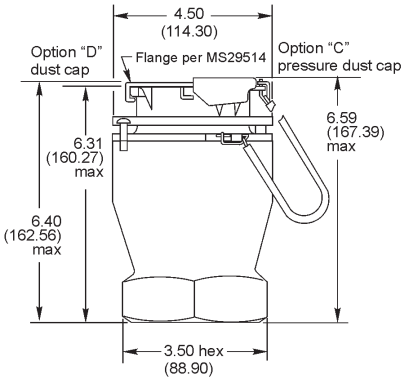

MODEL 61272

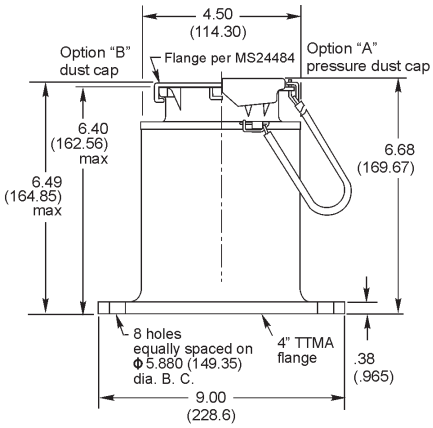

MODEL 61528

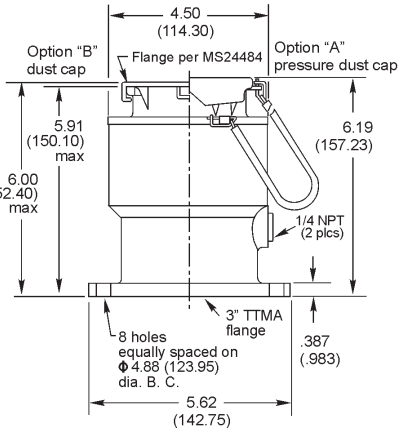

MODEL 61529

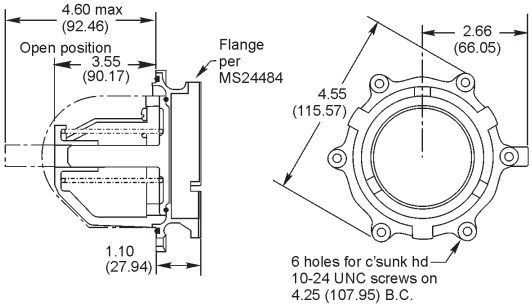

Eaton
Aerospace Group
Conveyance Systems Division
9650 Jeronimo Road
Irvine, California 92618
Phone: (949) 452 9500
Fax: (949) 452 9992

Eaton
Aerospace Group
Conveyance Systems Division
90 Clary Connector
Eastanollee, Georgia 30538
Phone: (706) 779 3351
Fax: (706) 779 2638

Eaton
Aerospace Group
Conveyance Systems Division
300 South East Avenue
Jackson, Michigan 49203-1972
Phone: (517) 787 8121
Fax: (517) 789 2947

Eaton
Aerospace Group
Conveyance Systems Division
11642 Old Baltimore Pike
Beltsville, Maryland 20705
Phone: (301) 937 4010
Fax: (301) 937 0134

Eaton
Aerospace Group
Conveyance Systems Division
15 Pioneer Ave.
Warwick, Rhode Island 02888
Phone: (401) 781 4700
Fax: (401) 785 4614

Eaton S. A.
Aerospace Group
Conveyance Systems Division
2 Rue Lavoisier BP 54 78310
Coignieres, France
Phone: (33) 130 69 30 00
Fax: (33) 130 69 30 56

Eaton Limited
Aerospace Group
Conveyance Systems Division
Broad Ground Road
Lakeside, Redditch
Worcestershire
B98 8YS
United Kingdom
Phone: (44) 1527 517555
Fax: (44) 1527 517556

Eaton S.A
Aerospace Group
Conveyance Systems Division
62 Chemin De Pau
64121 Serres-Castet
France
Phone: (33) 559 333 864
Fax: (33) 559 333 865

Eaton Germany GmbH
Aerospace Group
Conveyance Systems Division
Rudolf-Diesel-Strasse 8
82205 Gilching
Germany
Phone: (49) 8105 750
Fax: (49) 8105 7555

Vickers Systems Pte Ltd
Aerospace Group
Conveyance Systems Division
Lot 512, Jalan Delima
Batamindo Industrial Park
Batam 294533, Indonesia
Phone: (62) 770 611823
Fax: (62) 770 611821

Powering Business Worldwide

Eaton
Aerospace Group
9650 Jeronimo Road
Irvine, California 92618
Phone: (949) 452 9500
Fax: (949) 452 9555
www.eaton.com/aerospace

©2011 Eaton
All Rights Reserved
Printed In USA
Form No. TF100-77D
September 2012