Carter® Brand

Bottom Loading Components - 3 inch

Model 64129
Model 64079

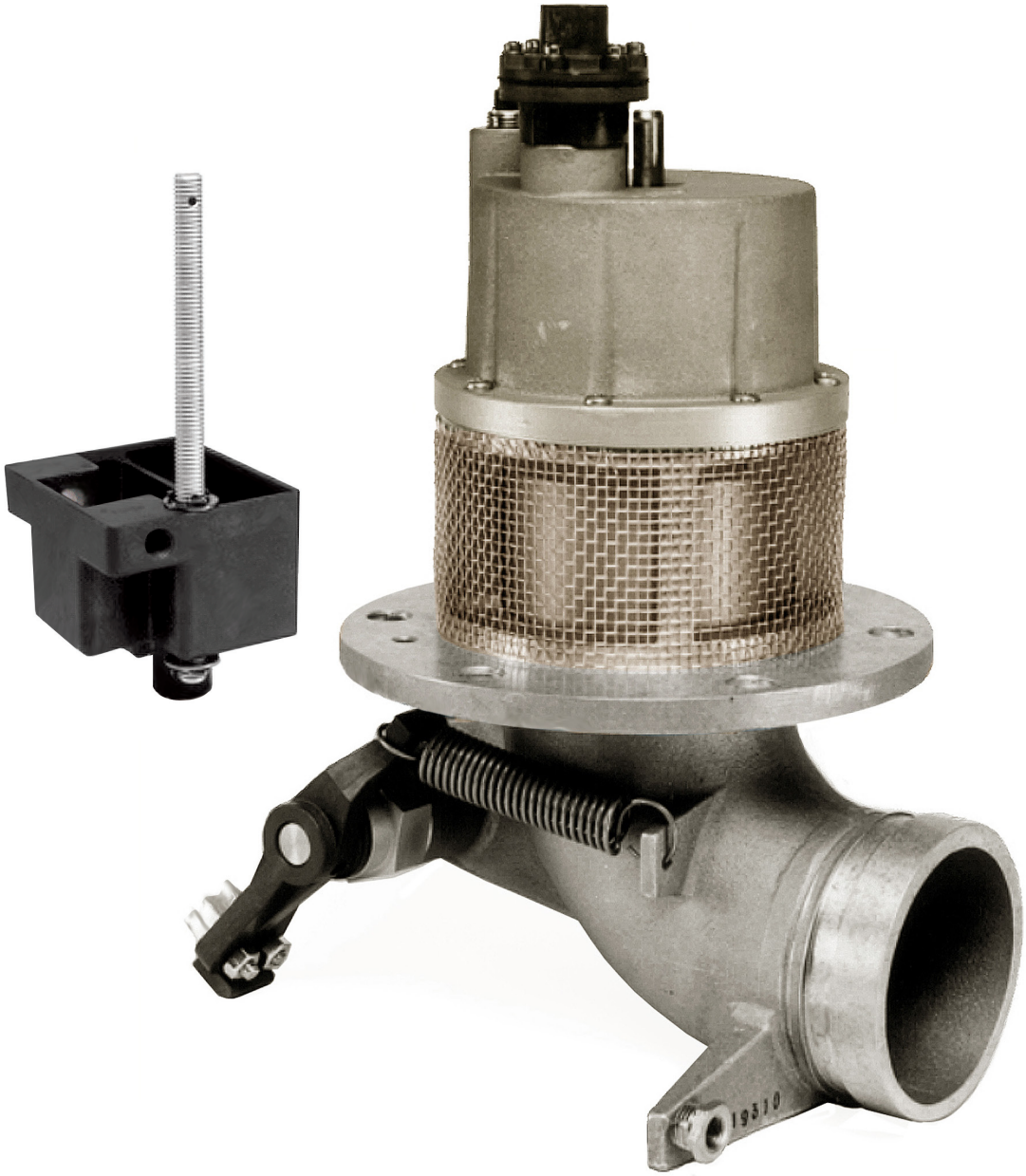

Powering Business Worldwide

Design Concepts

Eaton's Carter brand Model 64129 3 inch bottom loading valve and accompanying Model 64079 level sensor are designed for use in refuelers without available air pressure to provide off-loading capability. Bottom loading control is accomplished automatically when the tank liquid level reaches the pre-set level sensor. If desired, the level sensor can be replaced with a solenoid valve and an optic probe to effect shutoff control. A cable mechanically connected to the off-loading lever on the Model 64129 handles off-loading control.

Unlike the competitor's unit, which the Eaton valve can directly replace, Model 64129A can perform properly with any type of refueling pump, positive displacement or centrifugal, without inadvertently opening. Inlet pressures during loading are also not restricted, making it possible to load at all flow rates available.

Features

- Valve uses lever actuation for off-loading - 90 lbs. minimum
- Inlet mates victaulic coupling (standard), 3 inch TTMA pipe flange available on special order
- Unit will not open with suction applied to outlet, can be used with positive displacement pumping systems
- Valve main seal will not be dislodged with flow rates to 1,100 gpm (4163 l/min) or pressures over 75 psi (5.171 bar)
- Pilot valve is identical on all Eaton bottom loading components for lower maintenance costs
- No through hole in the diaphragm in the pilot to cause leakage and ultimate failure
- Internal valve mates standard TTMA sump flange and is provided with lever actuated off-loading control
- Low pressure loss:

  Bottom loading — 11 psi (.758 bar) at 300 gpm (1135 l/min)

  Off-loading — 1.8 psi (.124 bar) at 300 gpm (1135 l/min)

Level Sensor

There are no moving parts or seals in the Model 64079 level sensor which, when used with Model 64129A bottom loading valve, will provide high level bottom loading control. There are no wearing parts in the level sensor, hence it lasts indefinitely. Truck vibration will have no affect on the sensor, unlike float valves, which are subject to vibration damage. It is available with an optional mounting stud for adjustable level control. The stud is located outside of the collector/drain can for better level control. A collector/drain can and precheck feature are provided as standard equipment.

Installation Tips

- Install the unit with sufficient flexible line to the level sensor for easier removal and maintenance
- Inlet line to Model 64079 level sensor must be 3/8 inch diameter tubing. It should be routed from a port on the bottom loading adapter, such as Eaton's Carter brand Models 6958 or 61528 that have ports designed for this application. (See catalog sheet TF100-77A for adapter choices). Routing the inlet pressure source closer to the internal valve may not allow sufficient pressure for the system to function correctly. If the optional mounting stud (option A) is used, sufficient length of flexible tubing should be used to allow for adequate adjustment.
- Line between the pilot on bottom loading valve Model 64129A and level sensor Model 64079 should also be 3/8 inch diameter for best operation
- If desired, a separate precheck system may also be routed from the adapter to the precheck port on the level sensor, although the same affect can be achieved by installing a 3/8 inch spring loaded normally open ball valve in the inlet pressure line. It will be necessary to adjust the precheck gate in the bottom of the level sensor to make the precheck effective in either case. This is a trial and error adjustment. Note that there are no "tuning" plugs on Eaton Model 64079 as on the Whittaker Model F613. A simple "gate" type valve in the bottom of the precheck can provides adjusting of the precheck flow .
- It is essential for safety reasons to install a plastic tube to the drain fitting on the bottom of the level sensor. Draining fuel from the level sensor, if not collected and drained properly, could generate a static discharge, which could lead to a fire.
- The optional mounting stud is located outside of the precheck and drain cans on the Eaton's Carter brand level sensor. Unlike the Whittaker Model F613, Eaton's level sensor has no holes to plug with loose o-rings if the stud is used. If not used, the can on the Eaton unit is already sealed and there are no plugs to install. If installed correctly the level in the tank can be adjusted over a wide range simply by screwing the stud up or down to the desired level.
- If Model 64129A internal valve is to be used with either a Civacon Liberty optic probe system or an equivalent Scully system, a three-way solenoid valve must be installed in the pressure line from the adapter. When the tank level is below the probe, the inlet pressure should be routed to the pilot on the Model 64129A valve to cause it to open. When the optic probe is sensing fuel (level below the probe) the pilot on the Model 64129A valve must be vented to a tank and the inlet pressure shutoff. This will cause the valve to close and stop the bottom loading process.

Model 64129

3 inch Bottom Loading Valve

Option A or C shown (right) may be added to change the function or configuration of the unit

Option	Description
A	Adds pilot valve to basic unit to provide bottom loading control when used with Model 64079 jet level sensor or optic sensing probe system
C	Replaces victaulic inlet fitting with 3 inch TTMA pipe flange. Special order only

Dimensions shown in inches (mm)

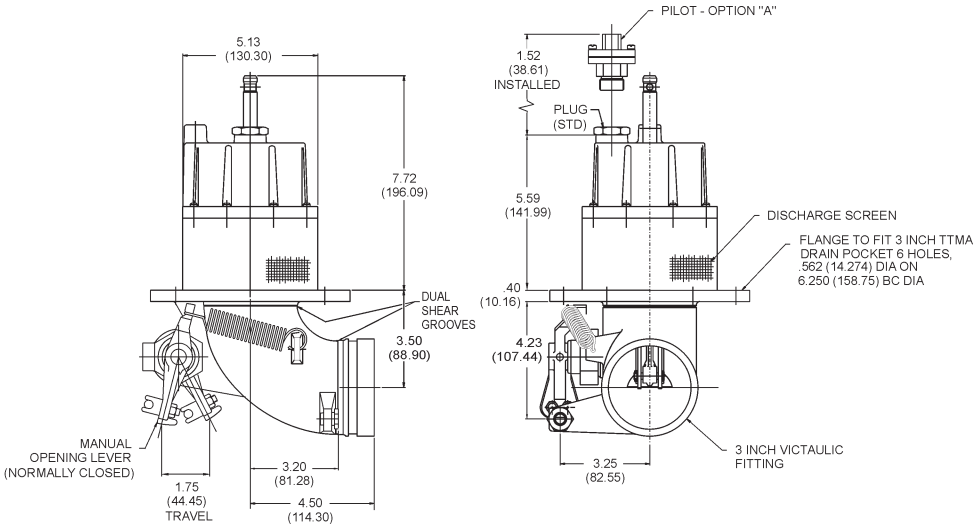

Model 64079

Level Sensor

Option A, B or C shown (right) may be added to the basic 64079 model number when used with Model 64129A bottom loading valve

Option	Description
A	Adds stud to basic unit to provide mounting and level adjustment — ½-13 UNC-2B thread
B	Dual jet level sensor
C	Jet level sensor with short body level sensor

Dimensions shown in inches (mm)

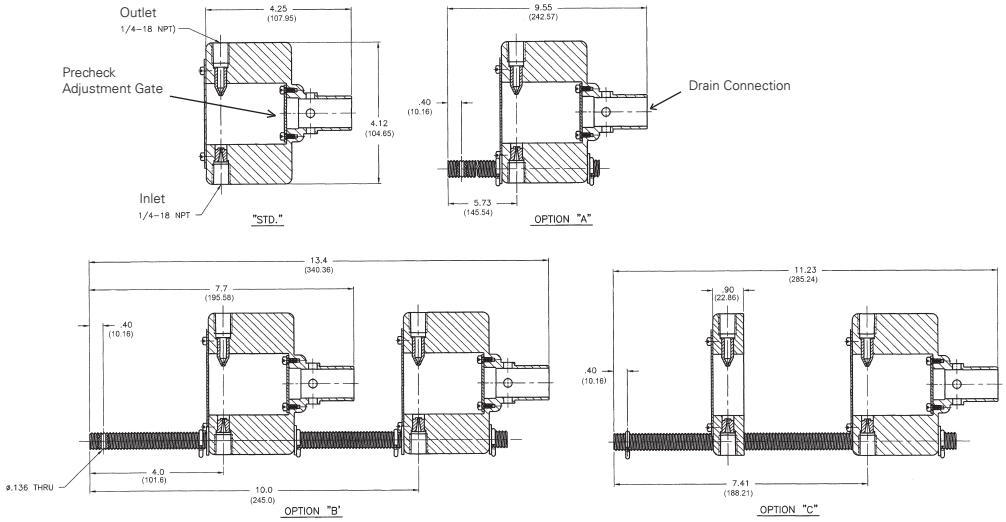

Equivalent Part Numbers — Whittaker To Eaton

The following table presents the equivalent Eaton's Carter brand models to replace Whittaker units:

Item Description	Whittaker Model	Eaton Model	Comments – Applicable To Carter Units
3 inch internal valve for off-loading only	F660	64129	Eaton models will not open when used with a positive displacement pump in the off-loading system — not sensitive to flow rate up to 1,100 gpm (4163 l/min)
3 inch internal valve for bottom loading and off-loading	F660A	64129A	Same comments as above
Level sensor, no options	F613	64079	Precheck and collector drain cans standard on Model 64079
Level sensor with mounting stud	F613A	64079A	Mounting stud located outside of precheck and drain cans for better control

Eaton
Aerospace Group
Conveyance Systems Division
9650 Jeronimo Road
Irvine, California 92618
Phone: (949) 452 9500
Fax: (949) 452 9992

Eaton
Aerospace Group
Conveyance Systems Division
90 Clary Connector
Eastanollee, Georgia 30538
Phone: (706) 779 3351
Fax: (706) 779 2638

Eaton
Aerospace Group
Conveyance Systems Division
300 South East Avenue
Jackson, Michigan 49203-1972
Phone: (517) 787 8121
Fax: (517) 789 2947

Eaton
Aerospace Group
Conveyance Systems Division
11642 Old Baltimore Pike
Beltsville, Maryland 20705
Phone: (301) 937 4010
Fax: (301) 937 0134

Eaton
Aerospace Group
Conveyance Systems Division
15 Pioneer Ave.
Warwick, Rhode Island 02888
Phone: (401) 781 4700
Fax: (401) 785 4614

Eaton S. A.
Aerospace Group
Conveyance Systems Division
2 Rue Lavoisier BP 54 78310
Coignieres, France
Phone: (33) 130 69 30 00
Fax: (33) 130 69 30 56

Eaton Limited
Aerospace Group
Conveyance Systems Division
Broad Ground Road
Lakeside, Redditch
Worcestershire
B98 8YS
United Kingdom
Phone: (44) 1527 517555
Fax: (44) 1527 517556

Eaton S.A
Aerospace Group
Conveyance Systems Division
62 Chemin De Pau
64121 Serres-Castet
France
Phone: (33) 559 333 864
Fax: (33) 559 333 865

Eaton Germany GmbH
Aerospace Group
Conveyance Systems Division
Rudolf-Diesel-Strasse 8
82205 Gilching
Germany
Phone: (49) 8105 750
Fax: (49) 8105 7555

Vickers Systems Pte Ltd
Aerospace Group
Conveyance Systems Division
Lot 512, Jalan Delima
Batamindo Industrial Park
Batam 294533, Indonesia
Phone: (62) 770 611823
Fax: (62) 770 611821

Powering Business Worldwide

Eaton
Aerospace Group
9650 Jeronimo Road
Irvine, California 92618
Phone: (949) 452 9500
Fax: (949) 452 9555
www.eaton.com/aerospace

©2011 Eaton
All Rights Reserved
Printed In USA
Form No. TF100-95C
November 2011