Carter® Brand

Bottom Loading Components — 4 inch

Powering Business Worldwide

Design Concepts

Eaton's Carter brand 4 inch bottom loading valves and accompanying level sensor are designed for use in refuelers where bottom loading/off-loading rates of up to 800 gpm (3028 l/min) are desired. There are two internal valve models. Model 64055 is for use in loading and off-loading, Model 64143 is strictly used for loading. Off-loading requires the use of air pressure to open the internal valve. Both are used with Model 64079 level sensor or, as an alternative, they can be used with an optic probe control. Bottom loading control is accomplished automatically when the tank liquid level reaches the pre-set level sensor. Both of the available internal valves can be purchased to use with either a single or dual level sensor as explained below.

Features

- Pilot valve is identical on all Eaton Carter brand bottom loading components, resulting in lower maintenance costs. There is no through hole in the diaphragm in the pilot to cause leakage and ultimate failure.
- Either single level or dual level control available. Dual level control, when used with Model 64079B level sensor, provides better shutoff level accuracy and lower surge pressures resulting from closing at very high rates of flow.
- 50 psi (3.447 bar) min. air pressure and standard air controlling valves (not furnished by Eaton) required for off-loading (see Model 64055 details). No off-loading control provided on Model 64143.
- Internal valve mates standard TTMA sump flange
- Can be used with optic sensing system
- Low pressure loss:

  Bottom loading — 4.5 psi (.310 bar) at 600 gpm (2271 l/min)

  Off-loading — 1.5 psi (.103 bar) at 600 gpm (2271 l/min)

Installation Tips

- Install the internal valve from the outside of the tank with sufficient flexible line between the pilot(s) and the level sensor for easier removal and maintenance
- Inlet line to Model 64079 level sensor from pressure source (adapter) must be at least 3/8 inch diameter tubing. It should be routed from a port on the bottom loading adapter, such as Eaton Carter brand Models 6958 or 61528, which have ports designed for this application. (See bottom loading adapters catalog sheet (TF100-77A) for additional information). Routing the inlet pressure source closer to the internal valve may not allow sufficient pressure for the system to function correctly. If the optional mounting stud (option A) is used, sufficient length of flexible tubing should be used to allow for adequate adjustment.
- Line between the pilot on Model 64129A valve and Model 64079 level sensor should be 1/4 inch diameter for best operation. Pressure surging may occur if larger tubing is used.
- If desired, a separate precheck system may also be routed from the adapter to the precheck port on the level sensor, although the same affect can be achieved by installing a 3/8 inch spring loaded, normally open ball valve in the inlet pressure line. It will be necessary to adjust the precheck gate in the bottom of the level sensor to make the precheck effective in either case. This is a trial and error adjustment. Note that there are no "tuning" plugs on Model 64079 level sensor as on the Whittaker Model F613. A simple "gate" type valve in the bottom of the precheck collector/drain can provides adjusting of the precheck flow.
- It is essential for safety reasons to install a plastic tube to the drain fitting on the bottom of the Model 64079 level sensor. Draining fuel from the level sensor, if not collected and drained properly, could generate a static discharge, which could lead to a fire.
- The optional mounting stud is located outside of the precheck and drain cans on Model 64079 level sensor. Unlike Whittaker's Model F613, there are no holes to plug with loose O-rings if the stud is used. If not used, the can on Model 64079 is already sealed and there are no plugs to install. If installed correctly the level in the tank can be adjusted over a wide range simply by screwing the stud up or down to the desired level.
- If the internal valve is to be used with an optic probe system, a three-way solenoid valve must be installed in the pressure line from the adapter. When the tank level is below the probe the inlet pressure should be routed to the pilot on the internal valve to cause it to open. When the optic probe is sensing fuel (level below the probe) the pilot on the internal valve must be vented to tank and the inlet pressure shutoff. This will cause the internal valve to close and stop the bottom loading process.

Avery Hardoll Equivalents

Eaton's Carter brand Model 64143A 4 inch bottom loading valve and 64079A level sensor can be used in lieu of the 4 inch Avery Hardoll jet able bottom loading valve. Bottom loading systems function basically the same.

Alternative Bottom Loading Models

Bottom loading equipment for 3 and 6 inch installations is also available. See catalog sheets TF100-94A and TF100-95A for complete information on this type of equipment.

64079 Level Sensor

There are no moving parts or seals in Model 64079 level sensor which, when used with Model 64055A or 64143A bottom loading valves, will provide high level bottom loading control. There are no wearing parts in the unit, hence it lasts indefinitely. Truck vibration will have no affect on the unit, unlike float valves, which are subject to vibration damage. It is available with an optional mounting stud for adjustable level control. The stud is located outside of the collector/drain can for better level control. A collector/drain can and precheck feature are provided as standard equipment.

Model 64079 Envelope Dimensions

Dimensions shown in inches (mm)

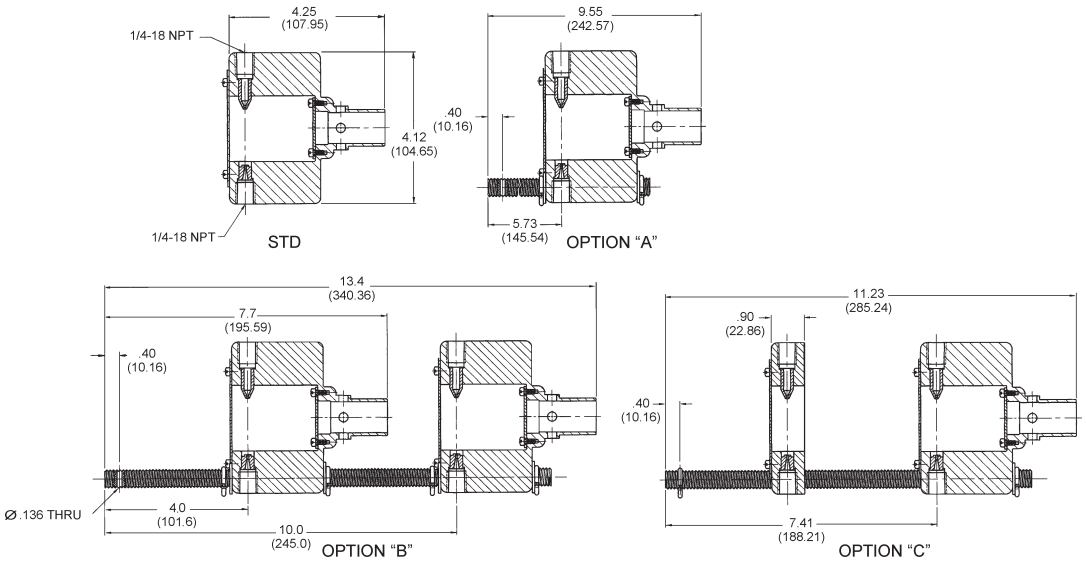

One or more of the options shown (right) may be added to change the function or configuration of the units below:

Model 64055 (basic configuration) — 4 inch Internal off-loading valve. Provides off-loading by use of air pressure

Model 64143A (no basic configuration available) — 4 inch bottom loading valve for use for loading only, no off-loading capability

Option	Description
A	Adds pilot valve to basic unit (Model 64055 only — Model 64143A not available without pilot option A) to provide bottom loading control when used with Model 64079 Jet Level Sensor or optic sensing probe system
B	Adds dual pilot valves to either unit for use with either two Model 64079 or one 64079B level sensors to improve accuracy of the tank shutoff level or to reduce surge at closure
C	Viton sliding seals

64079 — Option A, B or C may be added to the basic 64079 model number when used with Model 64055A or 64143A

Option	Description
A	Adds stud to basic unit to provide mounting and level adjustment — ½-13 UNC-2B thread
B	Dual jet level sensor
C	Jet level sensor with short body level sensor

Equivalent Model Numbers — Whittaker To Eaton's Carter brand

The table (right) presents the equivalent Eaton models to replace Whittaker units

Item Description	Whittaker Model	Eaton Model	Comments Applicable To Eaton models
4 inch Internal valve for off-loading only	F614	64055	Air pressure required for off-loading
4 inch Internal valve for bottom loading & off-loading	F614A or B	64055A or B	Either single or dual pilots available. Air required for off-loading.
4 inch Internal valve for bottom loading only	None	64143A	No off-loading capability. A separate internal valve must be used.
Level sensor, no options	F613	64079	Precheck and collector drain cans standard
Level sensor with mounting stud	F613A	64079A	Mounting stud located outside of precheck and drain cans for better control
Dual level sensor with mounting stud	F613B	64079B	Same comment as above

Envelope Dimensions

Dimensions shown in inches (mm)

Model 64055

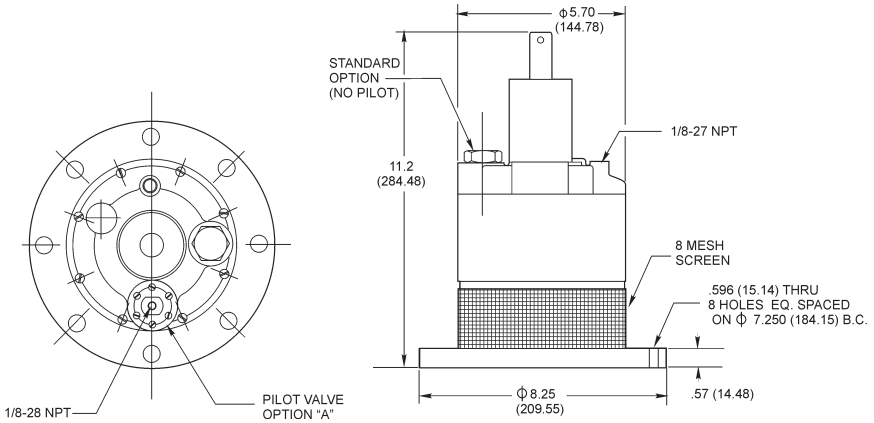

Model 64143A

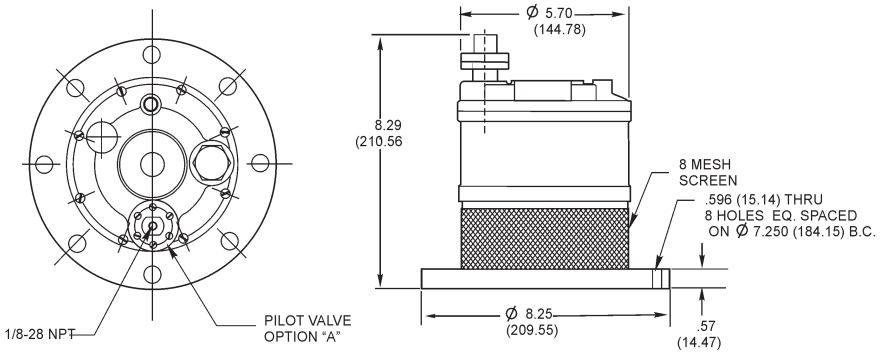

Eaton
Aerospace Group
Conveyance Systems Division
9650 Jeronimo Road
Irvine, California 92618
Phone: (949) 452 9500
Fax: (949) 452 9992

Eaton
Aerospace Group
Conveyance Systems Division
90 Clary Connector
Eastanollee, Georgia 30538
Phone: (706) 779 3351
Fax: (706) 779 2638

Eaton
Aerospace Group
Conveyance Systems Division
300 South East Avenue
Jackson, Michigan 49203-1972
Phone: (517) 787 8121
Fax: (517) 789 2947

Eaton
Aerospace Group
Conveyance Systems Division
11642 Old Baltimore Pike
Beltsville, Maryland 20705
Phone: (301) 937 4010
Fax: (301) 937 0134

Eaton
Aerospace Group
Conveyance Systems Division
15 Pioneer Ave.
Warwick, Rhode Island 02888
Phone: (401) 781 4700
Fax: (401) 785 4614

Eaton S. A.
Aerospace Group
Conveyance Systems Division
2 Rue Lavoisier BP 54 78310
Coignieres, France
Phone: (33) 130 69 30 00
Fax: (33) 130 69 30 56

Eaton Limited
Aerospace Group
Conveyance Systems Division
Broad Ground Road
Lakeside, Redditch
Worcestershire
B98 8YS
United Kingdom
Phone: (44) 1527 517555
Fax: (44) 1527 517556

Eaton S.A
Aerospace Group
Conveyance Systems Division
62 Chemin De Pau
64121 Serres-Castet
France
Phone: (33) 559 333 864
Fax: (33) 559 333 865

Eaton Germany GmbH
Aerospace Group
Conveyance Systems Division
Rudolf-Diesel-Strasse 8
82205 Gilching
Germany
Phone: (49) 8105 750
Fax: (49) 8105 7555

Vickers Systems Pte Ltd
Aerospace Group
Conveyance Systems Division
Lot 512, Jalan Delima
Batamindo Industrial Park
Batam 294533, Indonesia
Phone: (62) 770 611823
Fax: (62) 770 611821

Powering Business Worldwide

Eaton
Aerospace Group
9650 Jeronimo Road
Irvine, California 92618
Phone: (949) 452 9500
Fax: (949) 452 9555
www.eaton.com/aerospace

©2012 Eaton
All Rights Reserved
Printed In USA
Form No. TF100-121D
January 2012