Carter® Brand

Emergency Breakaway Coupling — 7 inch

Model 64191

Powering Business Worldwide

Design Concepts

Eaton's Carter brand emergency breakaway fuel coupling was developed in conjunction with the Canadian Navy during their search to eliminate fuel spillage at sea. This coupling meets or exceeds all the requirements of the new NATO replenishment at sea coupling specification and is the proposed replacement for the existing NATO "A/B" breakable spool. The Eaton emergency breakaway fuel coupling is designed to be used with abeam, astern "lay on deck" and with Hudson Reel standard 6 or 7 inch hose. When a pulling force of approximately 1100 pounds (5 kN) is applied, the probe will automatically disconnect and dry break on both sides with less than 100cc of fuel spillage. However, the probe, which weighs less than 78 lbs (35.38 kg), is easily connected or disconnected by one person without the need for special tools.

Features

- Replacement for a/b breakaway spool
- Provides dry breakaway under load
- Breakaway force of 1137 lb (5.1 kN)
- Can be reconnected without tools or re-setting procedure
- Dry break feature. Both halves seal automatically with maximum fuel spillage <100cc.
- Easily disconnected (manually) with internal vacuum present
- Constructed of anodized aluminum and stainless steel and is compatible with jet fuel, av gas and diesel fuels and marine environment
- Seals compatible with all NATO fuels
- Use with 6 or 7 inch hose
- Pressure drop — 8.2 psid at 2,500 US gpm (0.56 bar at 567.8 cum/hr)
- Weight, fueling probe (with environment cap) — 78 lbs (35.3 kg) max
- Temperature range: Passed test to -4°F (-20°C). Designed temperature range -40°F to +165°F (-40°C to +75°C).
- Maximum working flow — tested to 2,500 US gpm (567.8 cum/hr)
- Maximum working pressure – 150 psig
- Test pressure — 300 psig
- Maximum velocity — 20.8 ft/sec (6.3 m/sec)
- Astern cone available (see photo, right)

Model 64191-1 Probe

Shown with astern cone (option E)

Envelope Dimensions

Dimensions shown in inches
(millimeters)

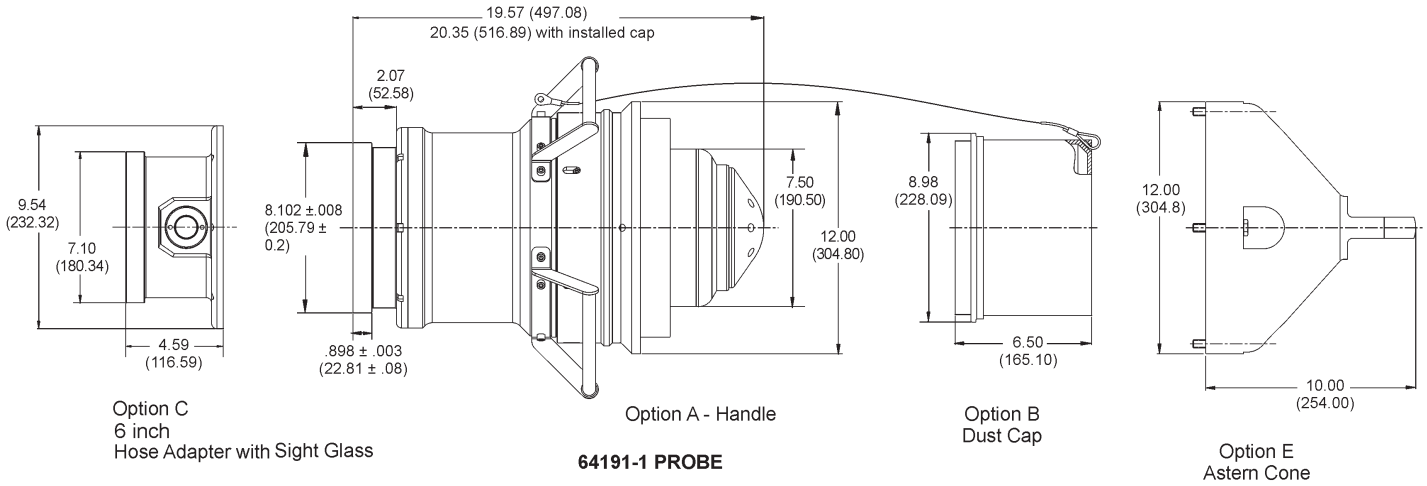

64191-1 PROBE

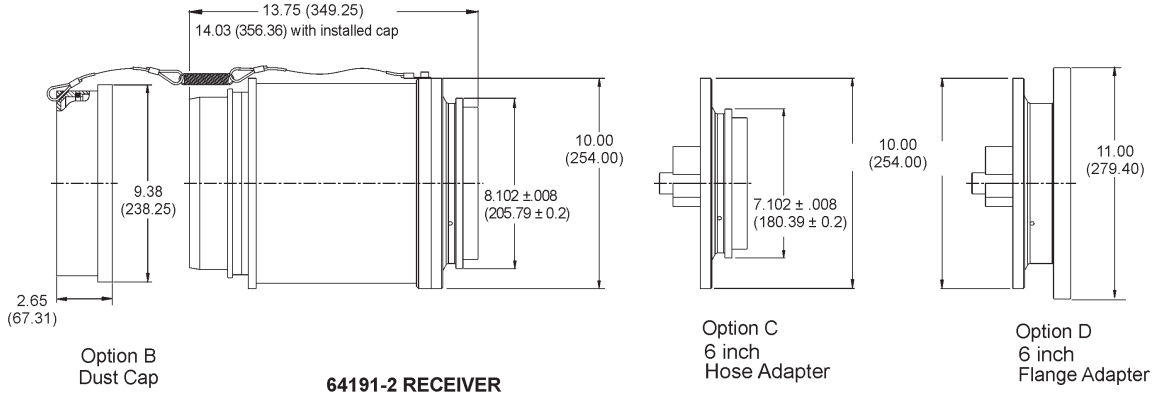

64191-2 RECEIVER

Eaton
Aerospace Group
Conveyance Systems Division
9650 Jeronimo Road
Irvine, California 92618
Phone: (949) 452 9500
Fax: (949) 452 9992

Eaton
Aerospace Group
Conveyance Systems Division
90 Clary Connector
Eastanollee, Georgia 30538
Phone: (706) 779 3351
Fax: (706) 779 2638

Eaton
Aerospace Group
Conveyance Systems Division
300 South East Avenue
Jackson, Michigan 49203-1972
Phone: (517) 787 8121
Fax: (517) 789 2947

Eaton
Aerospace Group
Conveyance Systems Division
11642 Old Baltimore Pike
Beltsville, Maryland 20705
Phone: (301) 937 4010
Fax: (301) 937 0134

Eaton
Aerospace Group
Conveyance Systems Division
15 Pioneer Ave.
Warwick, Rhode Island 02888
Phone: (401) 781 4700
Fax: (401) 785 4614

Eaton S. A.
Aerospace Group
Conveyance Systems Division
2 Rue Lavoisier BP 54 78310
Coignieres, France
Phone: (33) 130 69 30 00
Fax: (33) 130 69 30 56

Eaton Limited
Aerospace Group
Conveyance Systems Division
Broad Ground Road
Lakeside, Redditch
Worcestershire
B98 8YS
United Kingdom
Phone: (44) 1527 517555
Fax: (44) 1527 517556

Eaton S.A
Aerospace Group
Conveyance Systems Division
62 Chemin De Pau
64121 Serres-Castet
France
Phone: (33) 559 333 864
Fax: (33) 559 333 865

Eaton Germany GmbH
Aerospace Group
Conveyance Systems Division
Rudolf-Diesel-Strasse 8
82205 Gilching
Germany
Phone: (49) 8105 750
Fax: (49) 8105 7555

Vickers Systems Pte Ltd
Aerospace Group
Conveyance Systems Division
Lot 512, Jalan Delima
Batamindo Industrial Park
Batam 294533, Indonesia
Phone: (62) 770 611823
Fax: (62) 770 611821

Powering Business Worldwide

Eaton
Aerospace Group
9650 Jeronimo Road
Irvine, California 92618
Phone: (949) 452 9500
Fax: (949) 452 9555
www.eaton.com/aerospace

©2011 Eaton
All Rights Reserved
Printed In USA
Form No. TF100-99B
September 2011