Carter® Brand

Unisex Couplings A-A-59377

Model 64031

Powering Business Worldwide

Design Concepts

Eaton's Carter brand Model 64031 3 inch unisex coupling is designed in accordance with A-A-59377 (supersedes MIL-C-53071). Unisex couplings, as the name implies, are designed to mate with each other, allowing for the connection of hose assemblies regardless of the end fitting.

Features

- Unisex connection allows indiscriminate mating
- Manual ball valve included
- Interlock feature prevents disconnection of unit with ball valve open
- Pressure tight dust cap included on all units
- Dust seal incorporated between connected units — protects mating surfaces
- Units are easily repairable
- Variety of inlet fittings options to suit system needs
- Tan color standard, green optional

Technical Information

- Qualified in accordance with A-A-59377
- Pressure drop — 0.5 psi (.034 bar) max for 3 inch units at 200 USgpm (757 l/min)
- Operating pressure — 100 psi (6.894 bar)
- Burst pressure — 300 psi (20.684 bar)
- Hose swivel torque — 240 in-lb max at 100 psi (6.895 bar)
- Operating temperatures — -25°F to +155°F (-31.66°C to +65.55°C)
- Inlets to mate male or female NPT or BSPP camlocks, D-1/D-2/D-3 nozzle, hose barbs available. Special inlets available on request.
- Hose swivel integral to coupling

Envelope Dimensions

Dimensions shown in inches (millimeters)

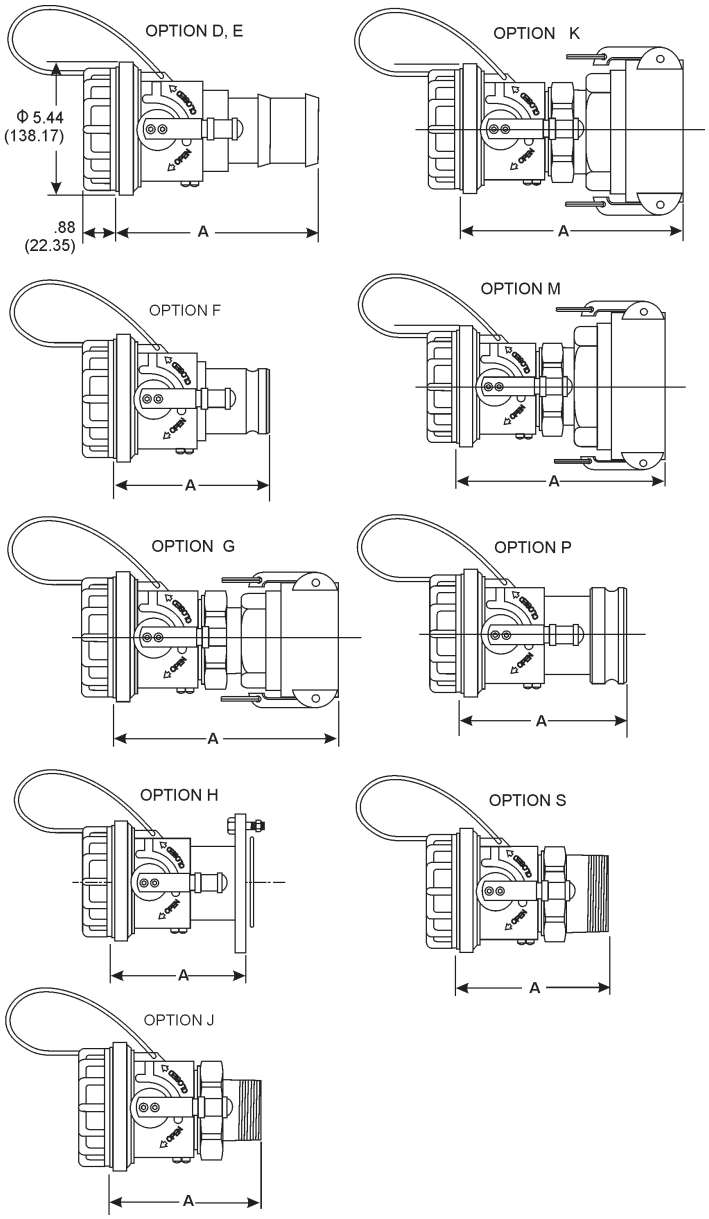

Option	Dim. "A" in	(mm)
D, E	9.35	(237.49)
F	6.80	(172.72)
G	8.45	(214.63)
H	6.03	(153.16)
J	6.35	(161.29)
K	9.00	(228.60)
M	9.40	(238.76)
P	7.10	(180.34)
S	6.50	(165.10)

Ordering Data

The basic model may be ordered with various options by adding one or more of the letters as shown in the table, right. The basic unit has no inlet fitting and meets the tan color requirement, hence an option letter must be specified to achieve a completed unit.

Option Letter	Description	Option Letter	Description
C	Adds 100-mesh screen	P	Adds 4 inch male camlock inlet
D	Adds 3 inch hose barb inlet	Q	Adds dust cap/plug, camlock type
E	Adds 4 inch hose barb inlet	R	Adds 3 inch female NPT inlet
F	Adds 2 inch male camlock inlet	S	Adds 3 inch male NPT inlet
G	Adds 2 inch female camlock inlet	T	Adds 3 inch MS33786-48 flanged inlet
H	Adds D-1/D-2/D-3 inlet flange	U	Adds 3 inch grooved end inlet per MIL-C-10387
J	Adds 2 inch male NPT inlet	V	Changes exterior color to green
K	Adds 3 inch female camlock inlet	W	Adds 4 inch male BSPP inlet
L	Adds 2 inch hose barb inlet	Z	CRES interface locking lugs
M	Adds 4 inch female camlock inlet	1	Adds 2-½ inch female NPT inlet
N	Adds 1-½ inch male NPT inlet	2	Adds 2-½ inch hose barb inlet

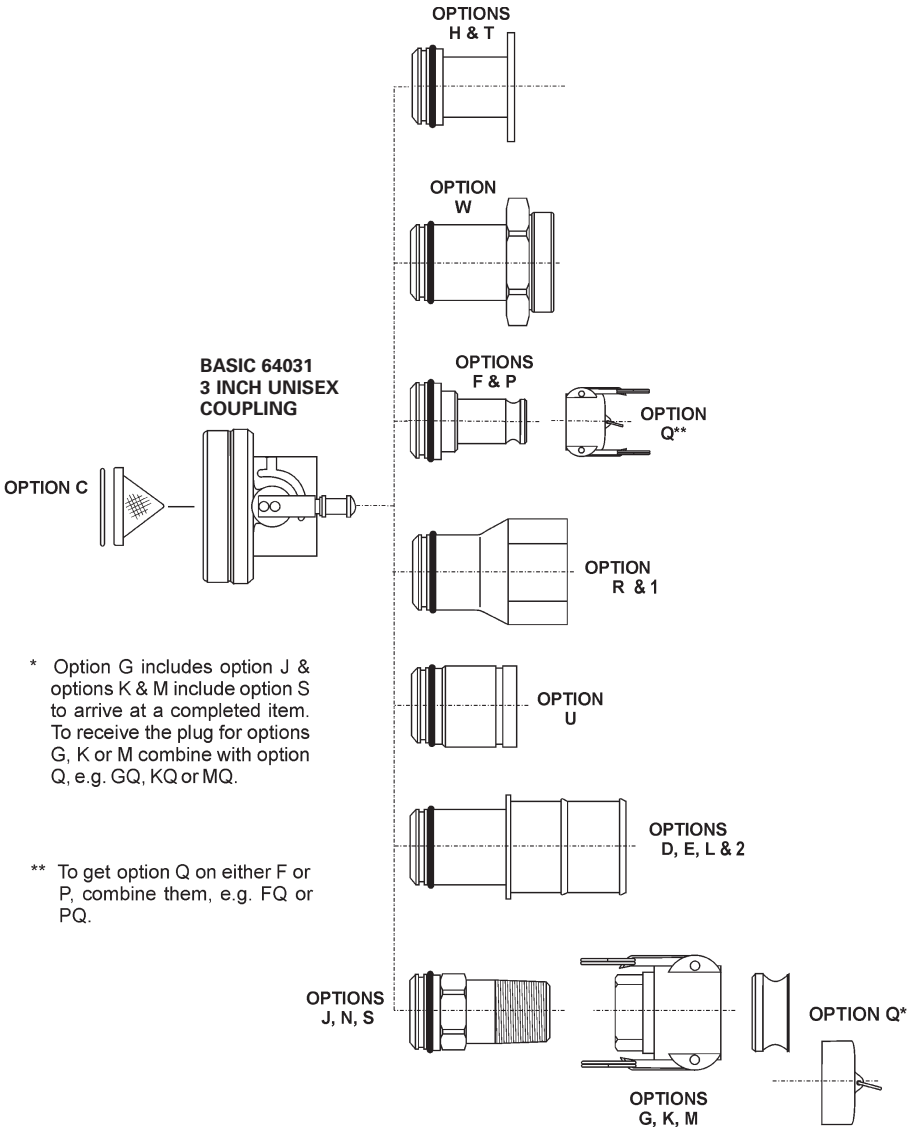

* Option G includes option J & options K & M include option S to arrive at a completed item. To receive the plug for options G, K or M combine with option Q, e.g. GQ, KQ or MQ.

** To get option Q on either F or P, combine them, e.g. FQ or PQ.

Eaton
Aerospace Group
Conveyance Systems Division
9650 Jeronimo Road
Irvine, California 92618
Phone: (949) 452 9500
Fax: (949) 452 9992

Eaton
Aerospace Group
Conveyance Systems Division
90 Clary Connector
Eastanollee, Georgia 30538
Phone: (706) 779 3351
Fax: (706) 779 2638

Eaton
Aerospace Group
Conveyance Systems Division
300 South East Avenue
Jackson, Michigan 49203-1972
Phone: (517) 787 8121
Fax: (517) 789 2947

Eaton
Aerospace Group
Conveyance Systems Division
11642 Old Baltimore Pike
Beltsville, Maryland 20705
Phone: (301) 937 4010
Fax: (301) 937 0134

Eaton
Aerospace Group
Conveyance Systems Division
15 Pioneer Ave.
Warwick, Rhode Island 02888
Phone: (401) 781 4700
Fax: (401) 785 4614

Eaton S. A.
Aerospace Group
Conveyance Systems Division
2 Rue Lavoisier BP 54 78310
Coignieres, France
Phone: (33) 130 69 30 00
Fax: (33) 130 69 30 56

Eaton Limited
Aerospace Group
Conveyance Systems Division
Broad Ground Road
Lakeside, Redditch
Worcestershire
B98 8YS
United Kingdom
Phone: (44) 1527 517555
Fax: (44) 1527 517556

Eaton S.A
Aerospace Group
Conveyance Systems Division
62 Chemin De Pau
64121 Serres-Castet
France
Phone: (33) 559 333 864
Fax: (33) 559 333 865

Eaton Germany GmbH
Aerospace Group
Conveyance Systems Division
Rudolf-Diesel-Strasse 8
82205 Gilching
Germany
Phone: (49) 8105 750
Fax: (49) 8105 7555

Vickers Systems Pte Ltd
Aerospace Group
Conveyance Systems Division
Lot 512, Jalan Delima
Batamindo Industrial Park
Batam 294533, Indonesia
Phone: (62) 770 611823
Fax: (62) 770 611821

Powering Business Worldwide

Eaton
Aerospace Group
9650 Jeronimo Road
Irvine, California 92618
Phone: (949) 452 9500
Fax: (949) 452 9555
www.eaton.com/aerospace

©2011 Eaton
All Rights Reserved
Printed In USA
Form No. TF100-124B
September 2011