Carter® Brand

Hydrant Pit Valve — 2-½ inch

Model 61524

Powering Business Worldwide

Eaton's Carter brand Model 61524 hydrant pit valve is designed to provide deadman control of the refueling operation within the hydrant pit. Both air and lanyard operation is available. This model is available with either 6 or 4 inch inlet flanges and both terminate with the 2-½ inch international standard three lug aircraft bayonet adapter. Now also available with an adapter kit to install the unit in older 12 and 13 inch diameter pits with 3 inch mounting flanges. Model 61524 utilizes many of the same parts as are used in the other Carter brand hydrant valves. The basic valve assembly consists of three parts, lower valve assembly, upper valve assembly and the pilot valve. The lower valve assembly contains a small isolation valve which will allow removal and servicing of the upper valve assembly and the pilot valve while the pit valve is under pressure (see service manual SM61524 for proper instructions for use).

Model 61524 hydrant pit valve is designed to minimize the propagation of surge pressure shocks into the upstream piping system during closure of the valve.

Features

- Outlet connection in accordance with 2-½ inch international standard three lug aircraft bayonet
- Closing time is 2-5 sec. Opening time is 5-10 sec.
- Either lanyard or air operated pilot valve available
- Servicing valve is standard and provides a means of removing the upper valve assembly and the pilot valve assembly while the unit is under pressure
- Standard inlet flange mates with 4 inch 150 lb. ANSI flange standard (optional 6 inch 300 lb. inlet available)
- Large pressure equalizing valve in the outlet is standard
- Defueling capability optional with air operated pilot valve
- Main piston well guided to minimize piston seal wear
- Ductile iron is epoxy coated for corrosion protection
- Minimum of bonded seals utilized to reduce maintenance costs

Technical Information

- Working pressure — 300 psi (20.68 bars)
- Closing time — 2 to 5 sec.
- Opening time — 5 to10 sec. (from zero to 600 USgpm [2,271 l/min])
- Overshoot — 30.0 gals maximum at 600 gpm (2,271 l/min)
- Pilot valve air pressure required for options E or J — 60 psi min. (4.136 bar)
- Mates Carter brand coupler Models 60445 and 61445, Whittaker model F211 and similar Avery Hardoll and Zenith couplers
- Materials:

  Outer housings — A536, grade 60-40-18 ductile iron

  Bayonet adapter (outlet) — aluminum bronze

  Trim— stainless steel and aluminum alloy

Mating Parts

Model 61524 hydrant valve will mate Carter brand Model 61445 hydrant couplers, older Model 60445 couplers (superseded by Model 61445), or any other standard 2-½ inch coupler, regardless of brand.

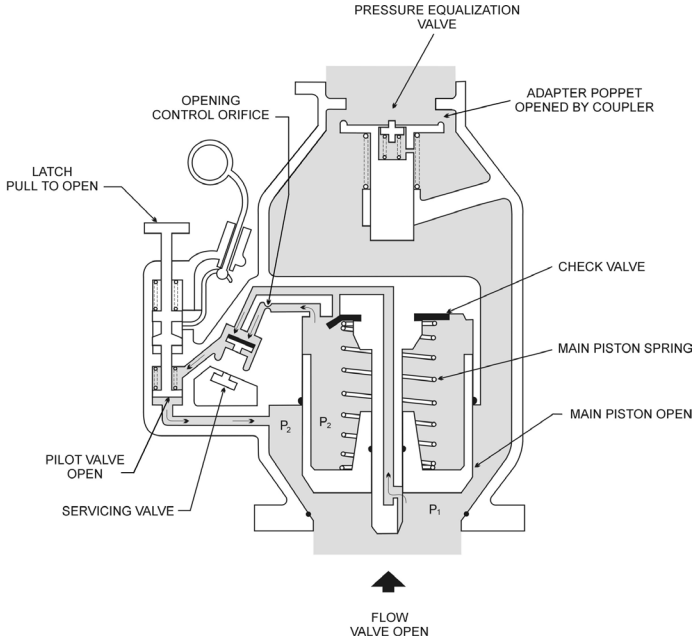

Figure A

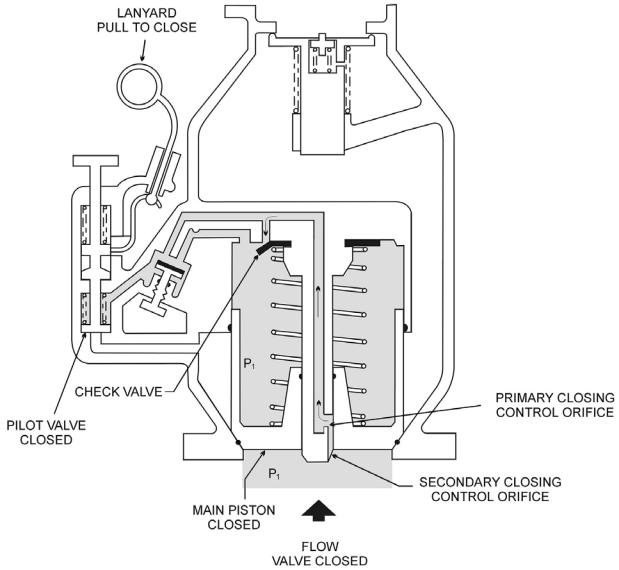

Figure B

Figure A reflects a lanyard operated pilot valve shown in the open position. The operation of the hydrant valve, whether the pilot is lanyard or air operated, is identical. Figure B reflects the same hydrant valve with the air pilot in a closed position. The only differences between the two units are in the operating mechanism that supplies the power to open and close the pilot valve. In the air operated pilot, the closing lanyard and opening latching mechanisms are replaced with an air operated piston.

Servicing Valve Closed/ Pilot Valve Open or Closed

The closing of the servicing valve has the same affect as closing the pilot valve. That is, the flow passage from the piston chamber to the downstream side of the piston is blocked. The piston chamber pressure begins to equalize to the inlet pressure (P1) through the check valve. The piston area is greater than the effective seal area, hence the unbalance of forces caused by the equal pressure, plus the spring, will cause the valve to stay closed.

Pilot Valve Open/ Servicing Valve Open

The open pilot valve allows the continuous passageway from the main piston chamber and from the closing control orifice. The piston chamber is vented through an opening control orifice and the open servicing valve to a point in the lower valve half. The pressure (P2) at this point is less than the inlet pressure (P1). The piston chamber pressure is also maintained at P2 causing an unbalance of forces on the piston. The inlet pressure force is greater than the combined piston pressure force plus the spring force hence the valve will open to allow flow. This is assuming that the outlet adapter poppet in the upper valve half has been opened by a coupler.

The pilot poppet is maintained in the open position by one of two methods:

- Lanyard operated pilot:
  The pilot is opened by the pull of the "T" handle located on the top of the pilot valve. When it is pulled upward, the spring loaded latch attached to the lanyard pivots to lock the pilot into the open position.
- Air operated pilot:
  Air pressure applied to the pilot piston will maintain the pilot in the open position until the pressure has been depleted (by release of deadman)

Pilot Valve Closed/ Servicing Valve Open

Pulling the lanyard, or depleting the air supplied to their respective pilots, will allow the spring loaded pilot poppet to close. This action blocks off the venting of the piston chamber to the lower pressure area downstream. The piston chamber begins to equalize to the inlet pressure (P1) through the check valve. The piston area is greater than the effective seal area, hence the unbalance of forces caused by the equal pressure plus the spring will cause the piston to begin to close. As the piston moves toward the closed position, the piston chamber volume increases and must be filled through the two series orifices.

The primary orifice is considerably larger than the secondary (slot). During the initial and majority of the travel of the piston, the primary orifice is fully exposed to the inlet pressure, hence the rate of closure is controlled by this orifice. When the piston moves far enough closed to cover the primary orifice, the secondary (smaller) orifice begins to control the closure rate. Hence the valve begins to close relatively rapidly and then slows down as it nears its closed position. The relative size and locations of these two orifices allows the valve to close to provide a minimum of overshoot and yet limit the surge pressure shock, on closing, and still maintain a closure rate in accordance with applicable international specifications.

On defueling option J, the pilot valve is manually held closed by the thumb screw to allow defueling flow.

Flow Characteristics

The chart (right) depicts typical pressure drop versus flow characteristics of Eaton's Carter brand Model 61524 hydrant pit valves with a mating Model 60445 or 61445 coupler.

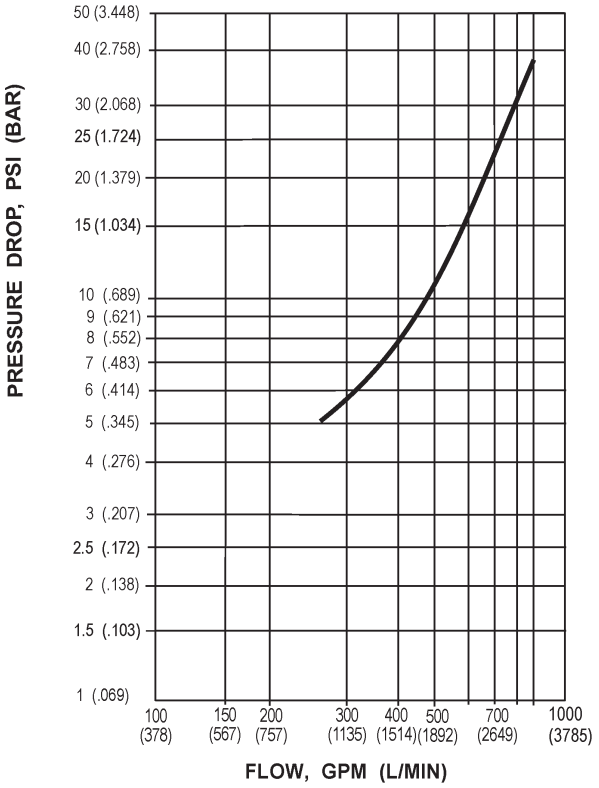

Installation Data

It is critical that the mating coupler be connected correctly and the pit lid be able to close completely. The hydrant valve's installation depth depends upon the brand of pit used. The thickness of the pit lid should be checked to be sure that it will clear the hydrant valve before setting the pit. The dimensions noted herein were correct for pits made in the United States at the time of printing. Eaton can not be responsible for changes in the pits. The dimensions shown are for reference only.

Dimensions shown in inches (millimeters).

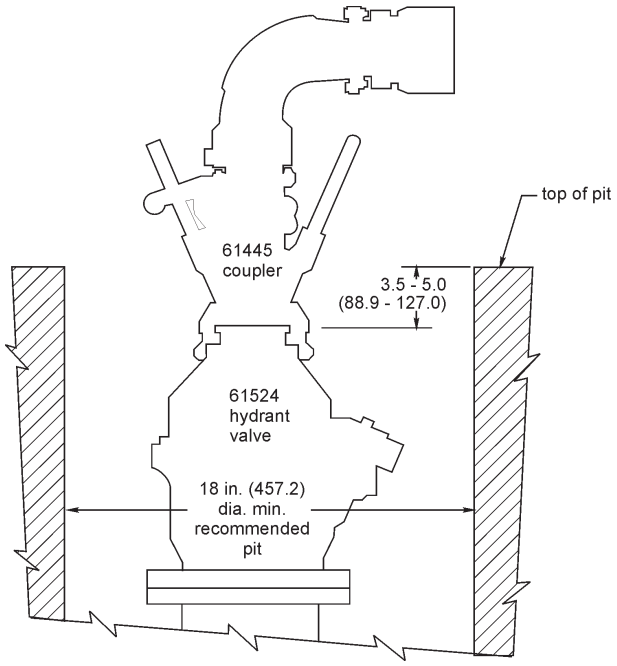

There are three basic valve model numbers to which various modifications may be made by adding option letters as shown in the table (right). The three basic units are as follows:

61524D

Lanyard operated pilot valve for manual on/off control. Valve allow flow in the fueling direction only.

Weight — 49.0 lbs (22.226 kg).

61524E

Air operated pilot valve for the deadman control. Valve allow flow in the fueling direction only.

Weight — 49.0 lbs (22.226 kg)

61524J

Air operated pilot valve for the deadman control with defuel control to allow flow on fuel in either the fueling or defueling direction.

Weight — 50.0 lbs (22.680 kg)

Option Letter	Description
A	Adds strainer, 10 mesh
B	Adds strainer, 20 mesh
C	Adds US standard product selection for positions 4, 5, and 6
D	Adds manually operated pilot valve
E	Adds air operated pilot valve
F	Adds dual air operated pilot valve
G	Adds 6 to 4 inch IP adapter
H	Adds 4-mesh stoneguard to option G only
J	Adds air operated defuel pilot valve
M	Adds QD to air pilot connection on options E & J only. Mates Hansen socket B2-H16
N	Adds hardware kit to allow installation into 12 or 13 inch pits with 3 inch ANSI mounting flanges

Example:

61524CEGHM — Air operated hydrant valve with 6 to 4 inch IP adapter, stoneguard, product selection and QD on the air port

Envelope Dimensions

The drawing (right) provides envelope dimensions for installation purposes only. They are not intended for inspection purposes.

Dimensions shown in inches (millimeters).

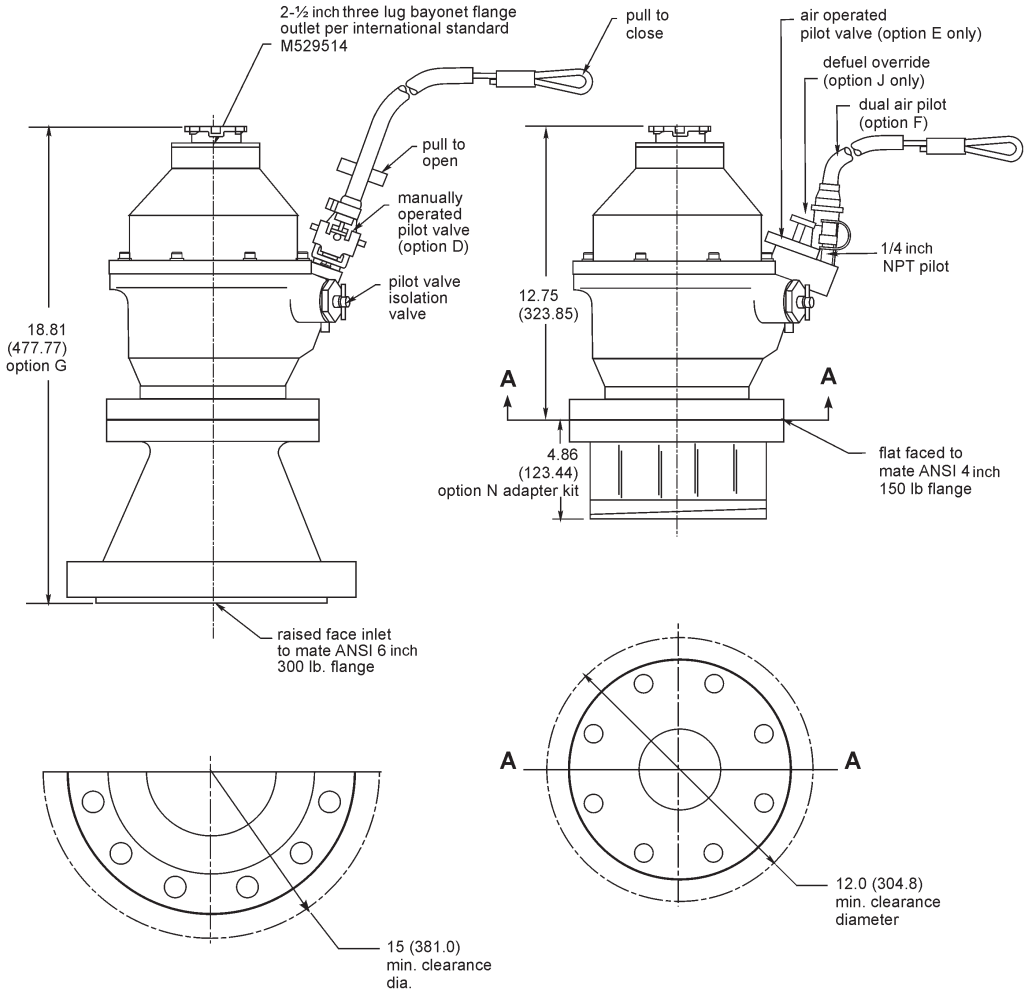

Eaton
Aerospace Group
Conveyance Systems Division
9650 Jeronimo Road
Irvine, California 92618
Phone: (949) 452 9500
Fax: (949) 452 9992

Eaton
Aerospace Group
Conveyance Systems Division
90 Clary Connector
Eastanollee, Georgia 30538
Phone: (706) 779 3351
Fax: (706) 779 2638

Eaton
Aerospace Group
Conveyance Systems Division
300 South East Avenue
Jackson, Michigan 49203-1972
Phone: (517) 787 8121
Fax: (517) 789 2947

Eaton
Aerospace Group
Conveyance Systems Division
11642 Old Baltimore Pike
Beltsville, Maryland 20705
Phone: (301) 937 4010
Fax: (301) 937 0134

Eaton
Aerospace Group
Conveyance Systems Division
15 Pioneer Ave.
Warwick, Rhode Island 02888
Phone: (401) 781 4700
Fax: (401) 785 4614

Eaton S. A.
Aerospace Group
Conveyance Systems Division
2 Rue Lavoisier BP 54 78310
Coignieres, France
Phone: (33) 130 69 30 00
Fax: (33) 130 69 30 56

Eaton Limited
Aerospace Group
Conveyance Systems Division
Broad Ground Road
Lakeside, Redditch
Worcestershire
B98 8YS
United Kingdom
Phone: (44) 1527 517555
Fax: (44) 1527 517556

Eaton S.A
Aerospace Group
Conveyance Systems Division
62 Chemin De Pau
64121 Serres-Castet
France
Phone: (33) 559 333 864
Fax: (33) 559 333 865

Eaton Germany GmbH
Aerospace Group
Conveyance Systems Division
Rudolf-Diesel-Strasse 8
82205 Gilching
Germany
Phone: (49) 8105 750
Fax: (49) 8105 7555

Vickers Systems Pte Ltd
Aerospace Group
Conveyance Systems Division
Lot 512, Jalan Delima
Batamindo Industrial Park
Batam 294533, Indonesia
Phone: (62) 770 611823
Fax: (62) 770 611821

Powering Business Worldwide

Eaton
Aerospace Group
9650 Jeronimo Road
Irvine, California 92618
Phone: (949) 452 9500
Fax: (949) 452 9555
www.eaton.com/aerospace

©2011 Eaton
All Rights Reserved
Printed In USA
Form No. TF100-84C
September 2011