Carter® Brand
Pressure Loss Compensator & Venturis

Model 60559
Model 64085
Model 64086
Model 64088
Model 64193

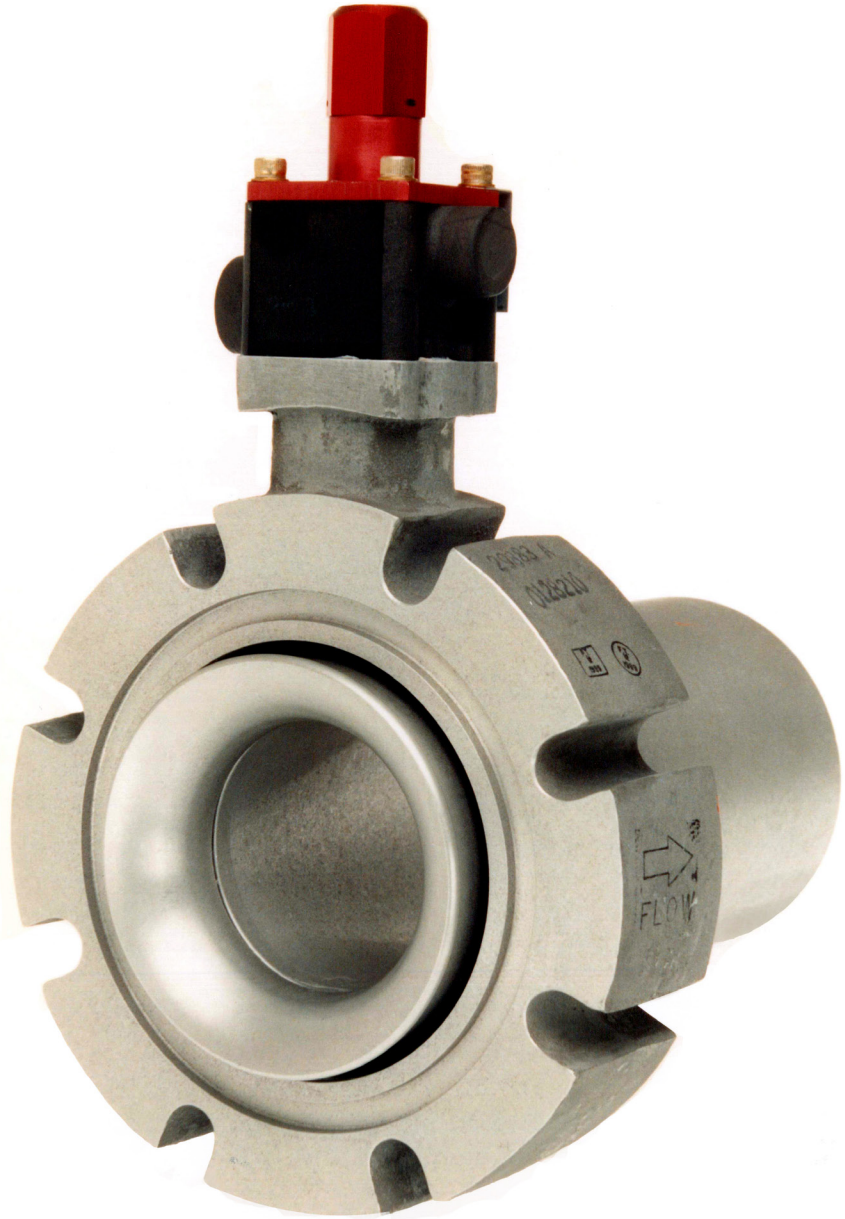

Powering Business Worldwide

Design Concepts

Eaton's Carter brand Model 60559 pressure loss compensator and a full range of venturis are designed to suit any vehicle application. Model 60559 4 inch pressure loss compensator is uniquely designed with features not available in other compensators or venturis. The simplicity of operation, low pressure loss, available compensation and compactness are ideal for all refueling vehicle applications.

In addition to Model 60559, Eaton also offers the more traditional venturi Models 64086 3 inch, 64085 4 inch, 64088 4x3 inch and Model 64193 6 inch line sizes. All venturis are available with either victaulic or TTMA flanged inlet and outlet mountings and optional pitot tube.

Features

Model 60559 pressure compensator

- Compact for easy installation between standard flanges, less than 2 inches of exposed length. Shorter overall installed length.
- High pressure compensation
- Extremely low line pressure loss from compensator inlet to outlet
- Only one needle valve for easy adjustment
- Adjustment screw is protected by screw-on cap with lock wire capability
- Mates either ANSI or TTMA flanges for ease of installation

Models 64085 & 64086 venturis

- Victaulic inlet and outlet
- 3 & 4 inch line sizes available
- Low pressure loss across units
- High pressure compensation
- One adjustment needle valve standard, two available

Performance Characteristics

Model 60559 Pressure Compensator

- Compensation — adjustable over 10 to 27 psi (.689 to 1.862 bar) at 600 gpm (2,271 l/min) flow rate
- Pressure loss — less than 1.2 psi (.083 bar) at 600 gpm (2,271 l/min) flow rate
- Maximum flow capability — over 1000 gpm (3,785 l/min)

Venturis

- Compensation adjustable:

  64086 3 inch — up to 35 psi (2.413 bar) at 300 gpm (1,135 l/min)

  64085 4inch — up to 45 psi (3.103 bar) at 600 gpm (2,271 l/min)

  64088 4x3 inch — up to 50 psi (3.447 bar) at 400 gpm (1,514 l/min)

  64193 6 inch — up to 43 psi (3.965 bar) at 1000 gpm (3,785 l/min)

  Pressure Loss:

  64086 3 inch — 4.6 psi (.317 bar) at 300 gpm (1,135 l/min)

  64085 4 inch — 22 psi (1.517 bar) at 600 gpm (2,271 l/min)

  64088 4x3 inch — 12 psi (.827 bar) at 400 gpm (1,514 l/min)

  64193 6 inch — 7 psi (.483 bar) at 1000 gpm (3,785 l/min)

Model 64085 Venturi

Model 64086 Venturi

Model 64088 Venturi

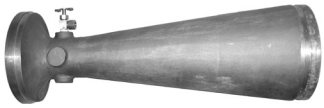

Model 64193 Venturi

Technical Data

Installation Note

To meet the performance shown in this bulletin, allow a minimum length of straight pipe on the inlet and outlet equal to 3.5 times the pipe diameter. Allow more straight piping if installed before or after elbows or tees. Anything less will result in poorer performance.

Pressure Compensation & Line Pressure Drop

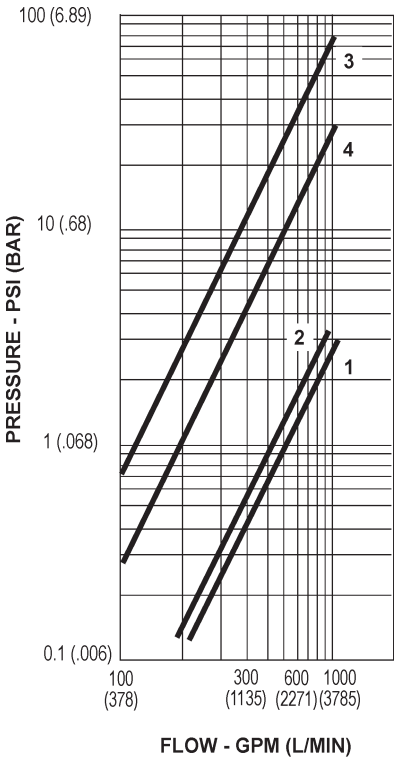

Model 60559

1. Pressure drop for min compensation
2. Pressure drop for max compensation
3. Min compensation
4. Max compensation

Pressure Compensation & Line Pressure Drop

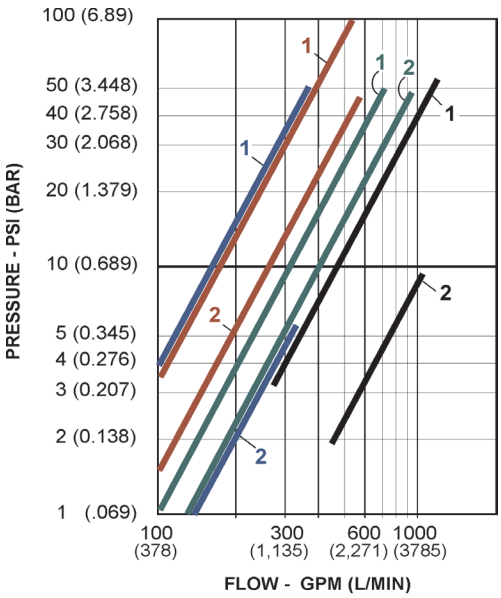

Model 64085
1. Pressure compensation
2. Pressure drop

Model 64086
1. Pressure compensation
2. Pressure drop

Model 64088
1. Pressure compensation
2. Pressure drop

Model 64193
1. Pressure compensation
2. Pressure drop

Envelope Dimensions

Dimensions shown in inches
(millimeters)

Model 60559

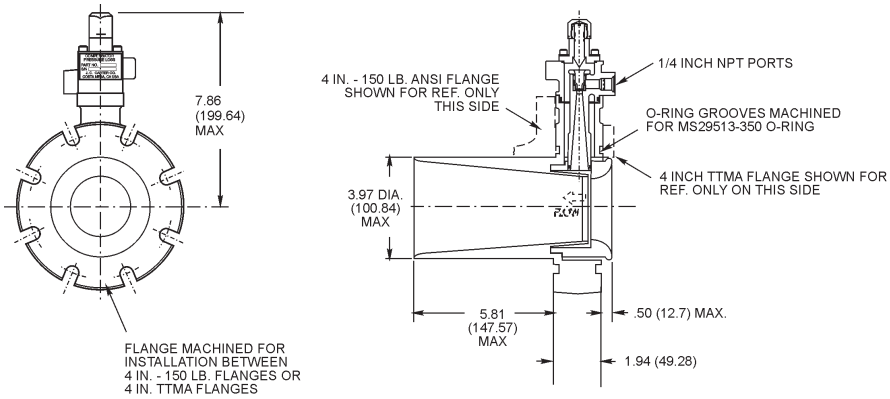

Model 64086

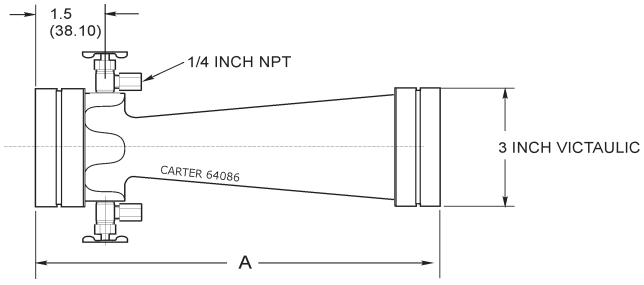

DIM	64085	64086	64088	64193
A	14.00 (355.6)	9.75 (247.65)	14.00 (355.6)	20.00 (508.0)
B	12.00 (304.8)	--	12.25 (311.15)	13.62 (345.95)
C	--	--	14.50 (368.3)	20.50 (520.7)

Model 64085

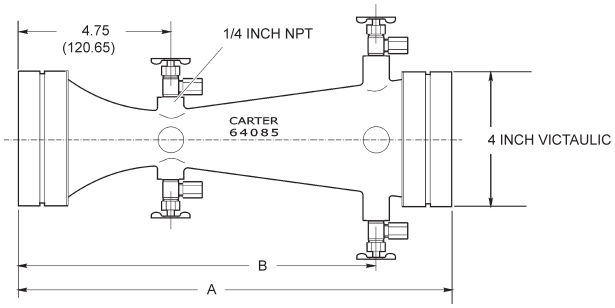

Model 64088

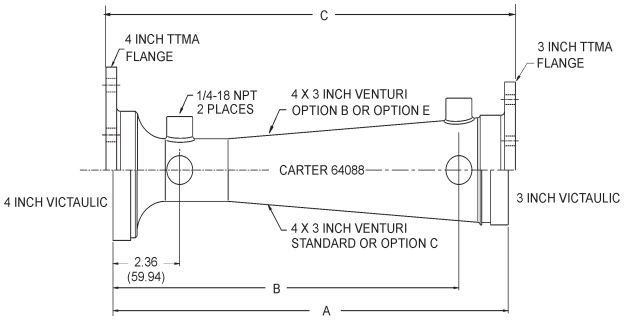

Model 64193

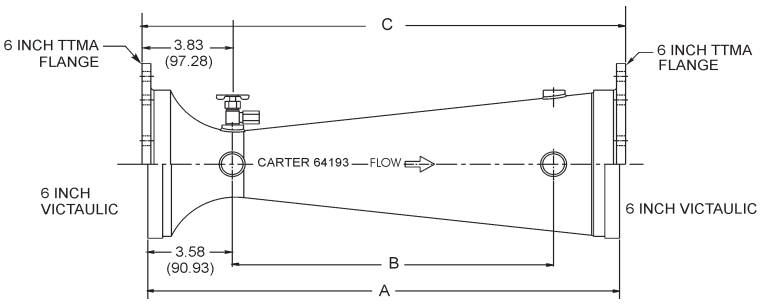

Ordering Data

Available options may be added to the basic part numbers when desired.

Model 60559

4 inch pressure loss compensator

Option	Description
C	3/8 inch NPT pressure pickup port
D	3/8 inch BSPP pressure pickup port
E	AND10050-6 pressure pickup port

Model 64085

4 inch Venturi

Basic model includes 1.50 inch throat diameter and one compensated pressure adjustment valve. Victaulic mounting ends.

Option	Description
A	Adds second compensated pressure adjustment valve
B	Replaces victaulic ends with TTMA flanged ends
C	Replaces 1.50 inch throat with 1.62 inch throat diameter. One compensated pressure adjustment valve, victaulic ends.
D	Adds pitot tube with one compensated pressure adjustment valve
E	Replaces 1.50 inch throat with 1.62 inch throat diameter. One compensated pressure adjustment valve. Replaces victaulic ends with TTMA flanged ends.

Model 64086

3 inch Venturi

Basic model includes 1.20 inch throat diameter and one compensated pressure adjustment valve. Victaulic mounting ends.

Option	Description
A	Adds second compensated pressure adjustment valve
B	Replaces victaulic ends with TTMA flanged ends
D	Adds pitot tube with one compensated pressure adjustment valve

Model 64088

4 x 3 inch Venturi

Basic unit includes 1.25 inch throat diameter and one compensated pressure adjustment valve. Victaulic mounting ends.

Option	Description
A	Adds second compensated pressure adjustment valve
B	Replaces victaulic ends with TTMA flanged ends
C	Replaces 1.25 inch throat with 1.38 inch throat diameter. One compensated pressure adjustment valve, victaulic ends.
D	Adds pitot tube with one compensated pressure adjustment valve
E	Replaces 1.25 inch throat with 1.38 inch throat diameter. One compensated pressure adjustment valve. Replaces victaulic ends with TTMA flanged ends.

Model 64193

6 inch Venturi

Basic model includes 2.30 inch throat diameter and one compensated pressure adjustment valve. Victaulic mounting ends.

Option	Description
A	Adds second compensated pressure adjustment valve
B	Replaces victaulic ends with TTMA flanged ends
D	Adds pitot tube with one compensated pressure adjustment valve

Eaton
Aerospace Group
Conveyance Systems Division
9650 Jeronimo Road
Irvine, California 92618
Phone: (949) 452 9500
Fax: (949) 452 9992

Eaton
Aerospace Group
Conveyance Systems Division
90 Clary Connector
Eastanollee, Georgia 30538
Phone: (706) 779 3351
Fax: (706) 779 2638

Eaton
Aerospace Group
Conveyance Systems Division
300 South East Avenue
Jackson, Michigan 49203-1972
Phone: (517) 787 8121
Fax: (517) 789 2947

Eaton
Aerospace Group
Conveyance Systems Division
11642 Old Baltimore Pike
Beltsville, Maryland 20705
Phone: (301) 937 4010
Fax: (301) 937 0134

Eaton
Aerospace Group
Conveyance Systems Division
15 Pioneer Ave.
Warwick, Rhode Island 02888
Phone: (401) 781 4700
Fax: (401) 785 4614

Eaton S. A.
Aerospace Group
Conveyance Systems Division
2 Rue Lavoisier BP 54 78310
Coignieres, France
Phone: (33) 130 69 30 00
Fax: (33) 130 69 30 56

Eaton Limited
Aerospace Group
Conveyance Systems Division
Broad Ground Road
Lakeside, Redditch
Worcestershire
B98 8YS
United Kingdom
Phone: (44) 1527 517555
Fax: (44) 1527 517556

Eaton S.A
Aerospace Group
Conveyance Systems Division
62 Chemin De Pau
64121 Serres-Castet
France
Phone: (33) 559 333 864
Fax: (33) 559 333 865

Eaton Germany GmbH
Aerospace Group
Conveyance Systems Division
Rudolf-Diesel-Strasse 8
82205 Gilching
Germany
Phone: (49) 8105 750
Fax: (49) 8105 7555

Vickers Systems Pte Ltd
Aerospace Group
Conveyance Systems Division
Lot 512, Jalan Delima
Batamindo Industrial Park
Batam 294533, Indonesia
Phone: (62) 770 611823
Fax: (62) 770 611821

Powering Business Worldwide

Eaton
Aerospace Group
9650 Jeronimo Road
Irvine, California 92618
Phone: (949) 452 9500
Fax: (949) 452 9555
www.eaton.com/aerospace

©2011 Eaton
All Rights Reserved
Printed In USA
Form No. TF100-93C
September 2011