Carter® Brand

Inline & Bypass Control Valves — Digital Control

Model 64504
Model 64505

Model 64514
Model 64515

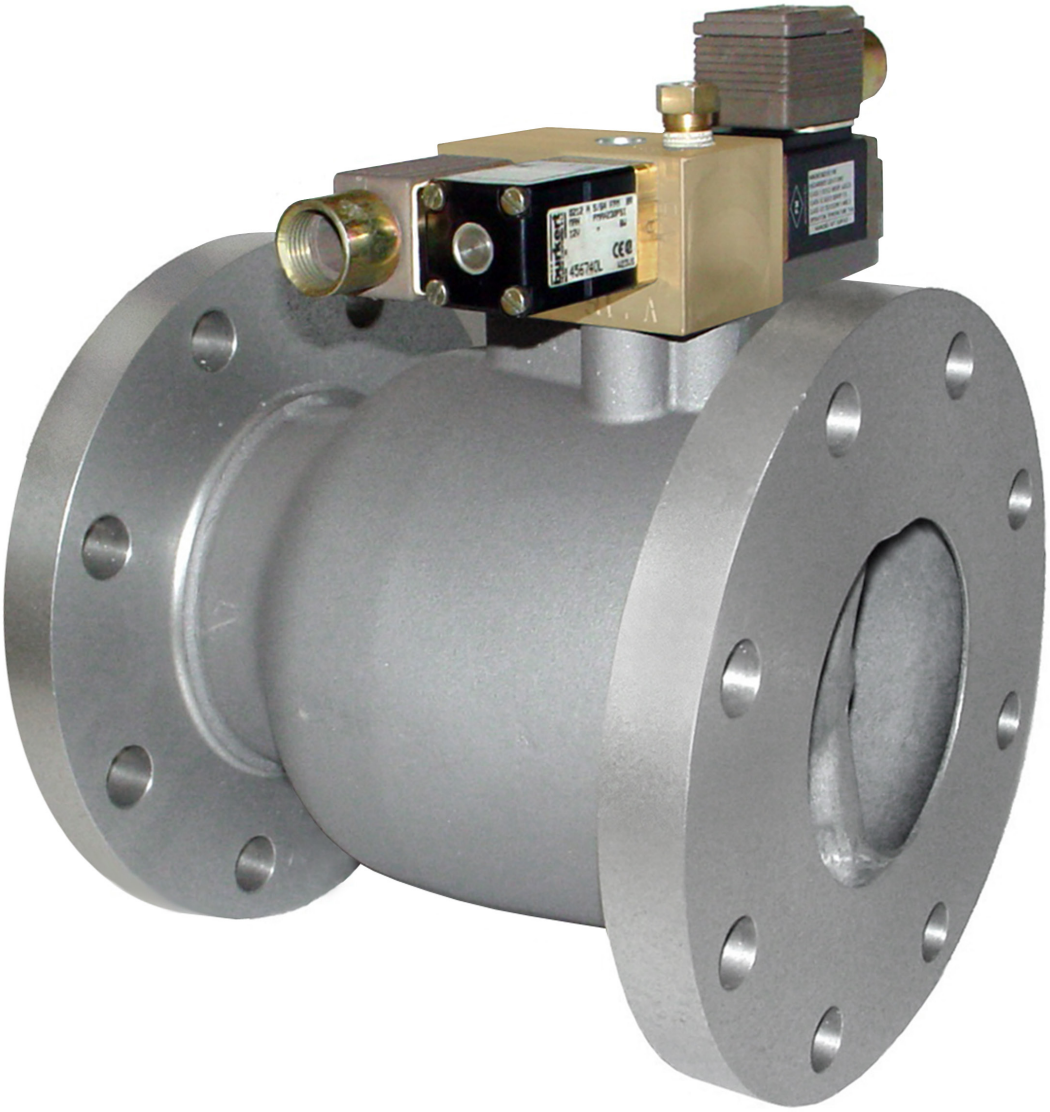

Powering Business Worldwide

Design Concepts

Eaton's Carter brand Models 64504 and 64514 inline valves and Models 64505 & 64515 bypass valves are used in the digital line of controls. All of the valves utilize the same control module. Differences are based on the orientation of the solenoids on the control module block and the size of the valve housing between the 3 & 4 inch bodies. Most of the seals and internal parts of the bodies are the same.

These new valves can be used with the original Carter brand Model 64035 (Digital I) digital control system or with the newer Carter brand Model 64235 (Digital II) control system with hand held unit, transducers, remote displays, etc. Detailed descriptions of components used in these systems are covered in the Model 64235 brochure (TF100-104).

The unique design features of Eaton's Carter brand digital control systems make conversion from a standard air set system to a digital system easy. See Model 64235 brochure (TF100-104) for detailed description of the advantages offered by Eaton's Carter brand digital control systems.

Features

- Standard 150 lb ANSI inlet and outlet flanges
- Victaulic adapters available
- Bleeder on module block facilitates simple bleeding of air from the valve — no venting is required once proper bleeding is accomplished
- Opening and closing times can be changed during the system setup on the digital control module
- No expensive servos to adjust
- Spare parts required for maintenance kept to a minimum due to lack of complicated servos. Many parts are common both bypass and inline valves of same size.
- Many spares common to Carter brand couplers

Digital Control Systems

A typical digitally controlled refueler system

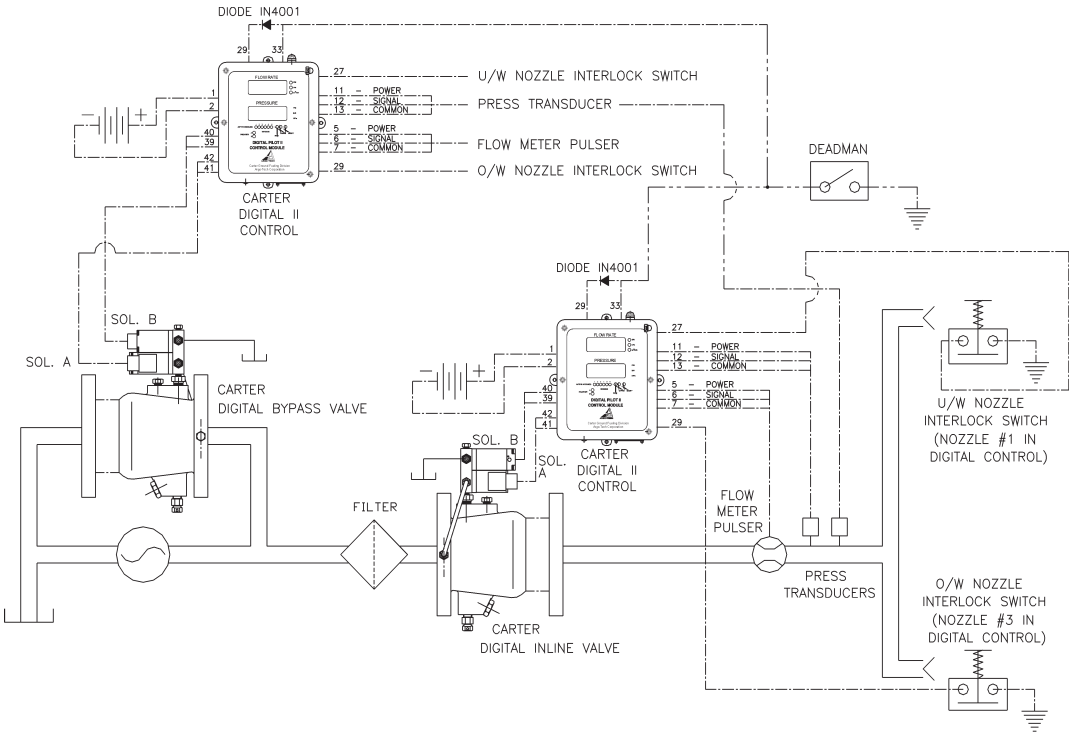

Ordering Data

All four valves have four available options (shown at right) to be added to the basic part number when desired.

Option	Description
A	12 VDC operation
B	24 VDC operation
D	Adds one victaulic adapter
E	Adds two victaulic adapters

Note: It is not recommended to use option E on a valve without additional support to keep it from turning in the piping

Operating Characteristics

	64504/64505 — 3 inch	64514/64515 — 4 inch
Working Pressure	Up to 200 psi (13.793 bar)	Up to 200 psi (13.793 bar)
Rated Flow	Up to 800 gpm (3028 l/min)	Up to 1200 gpm (4542 l/min)
Pressure Drop	4.9 psi (.338 bar) @ 600 gpm (2271 l/min)	4.3 psi (.296 bar) @ 1000 gpm (3785 l/min)
Pressure Control, Overshoot, Opening & Closing Times	Controlled by digital system	Controlled by digital system
Repeatability	±3 psi (.207 bar)	±3 psi (.207 bar)
Surge Control	Controlled by digital system	Controlled by digital system
Operating Temperature	-40°F to +125°F (-40°C to +52°C)	-40°F to +125°F (-40°C to +52°C)

Envelope Dimensions

Dimensions shown in inches (millimeters)

Model 64504

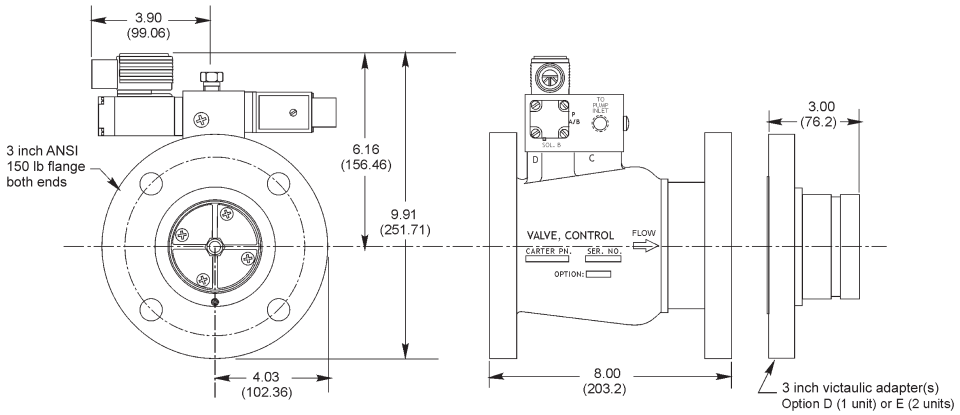

Model 64514

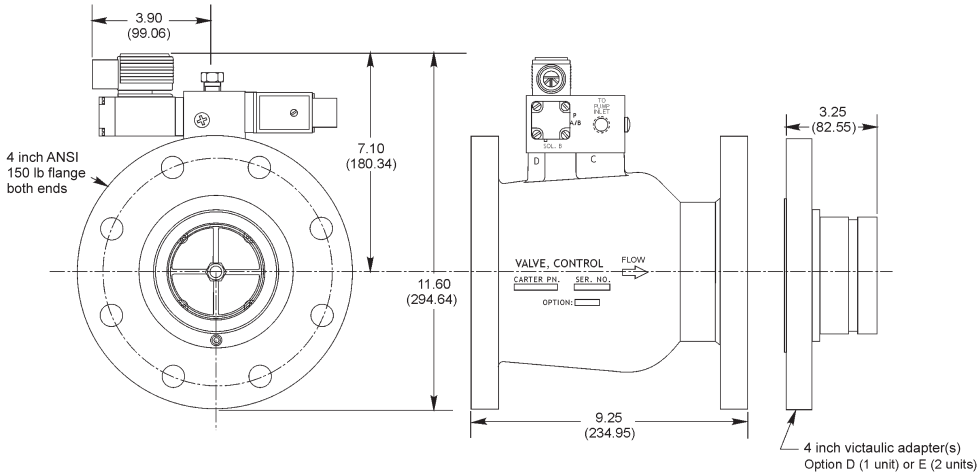

Model 64505

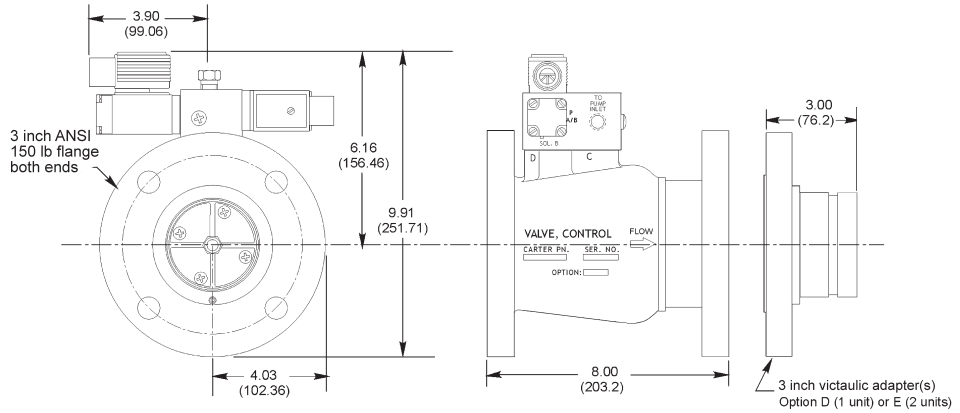

Model 64515

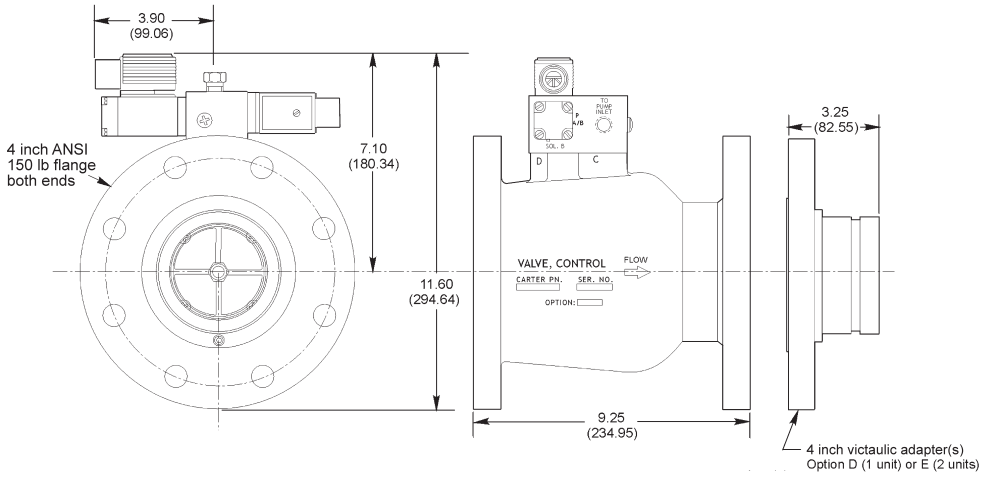

Eaton
Aerospace Group
Conveyance Systems Division
9650 Jeronimo Road
Irvine, California 92618
Phone: (949) 452 9500
Fax: (949) 452 9992

Eaton
Aerospace Group
Conveyance Systems Division
90 Clary Connector
Eastanollee, Georgia 30538
Phone: (706) 779 3351
Fax: (706) 779 2638

Eaton
Aerospace Group
Conveyance Systems Division
300 South East Avenue
Jackson, Michigan 49203-1972
Phone: (517) 787 8121
Fax: (517) 789 2947

Eaton
Aerospace Group
Conveyance Systems Division
11642 Old Baltimore Pike
Beltsville, Maryland 20705
Phone: (301) 937 4010
Fax: (301) 937 0134

Eaton
Aerospace Group
Conveyance Systems Division
15 Pioneer Ave.
Warwick, Rhode Island 02888
Phone: (401) 781 4700
Fax: (401) 785 4614

Eaton S. A.
Aerospace Group
Conveyance Systems Division
2 Rue Lavoisier BP 54 78310
Coignieres, France
Phone: (33) 130 69 30 00
Fax: (33) 130 69 30 56

Eaton Limited
Aerospace Group
Conveyance Systems Division
Broad Ground Road
Lakeside, Redditch
Worcestershire
B98 8YS
United Kingdom
Phone: (44) 1527 517555
Fax: (44) 1527 517556

Eaton S.A
Aerospace Group
Conveyance Systems Division
62 Chemin De Pau
64121 Serres-Castet
France
Phone: (33) 559 333 864
Fax: (33) 559 333 865

Eaton Germany GmbH
Aerospace Group
Conveyance Systems Division
Rudolf-Diesel-Strasse 8
82205 Gilching
Germany
Phone: (49) 8105 750
Fax: (49) 8105 7555

Vickers Systems Pte Ltd
Aerospace Group
Conveyance Systems Division
Lot 512, Jalan Delima
Batamindo Industrial Park
Batam 294533, Indonesia
Phone: (62) 770 611823
Fax: (62) 770 611821

Powering Business Worldwide

Eaton
Aerospace Group
9650 Jeronimo Road
Irvine, California 92618
Phone: (949) 452 9500
Fax: (949) 452 9555
www.eaton.com/aerospace

©2011 Eaton
All Rights Reserved
Printed In USA
Form No. TF100-112B
September 2011