Carter® Brand

Hydrant Coupler — API Style

Model 61525

Powering Business Worldwide

Design Concepts

Eaton's Carter brand Model 61525 hydrant coupler is a rugged, lightweight 4 inch coupler designed for the high flow rates used in today's hydrant systems. Model 61525 is available with a variety of options to meet most customers' requirements.

Features

- Mates Carter brand hydrant valve Models 60554, 61654 and all units in accordance with API bulletin 1584
- Standard rigid poppet handle located in position to fit all hydrant valves without interference
- Lightweight — 19.5 lbs (8.845 kg) with 90° elbow and quick disconnect (QD)
- Mechanical interlock prevents opening of poppet until properly connected to hydrant. Can not be removed until fully closed.
- Standard secondary collar interlock prevents "blow-off" situations
- External dust cap standard
- Plastic bumper protects metal parts
- 3 & 4 inch NPT and BSPP outlet threaded connections available. 4 inch ASSPT also available.
- Self-adjusting spring loaded nose seal
- Optional 3/4 inch NPT sense port located in elbow
- Optional folding handle
- Optional product selection
- Optional 1.75 inch stroke available to mate older non-standard API hydrant valves

Superseding Data

Model 61525 supersedes and replaces the older coupler Model 60525. All options available on Model 60525 are available on Model 61525 under the same option letter, with the exception of option A (rigid handle) and E (90° elbow) on the older Model 60525. The rigid handle is standard on Model 61525. Option E includes a sense port in the elbow. Specify option F to delete this sense port. Model 61525S replaces Model 60525-1. Model 60525 couplers can be upgraded to Model 61525 by use of a kit, KD44664-1 or KD44665-2. Refer to manual SM61525 for more details.

Technical Data

- Suitable for operating pressures up to 200 psi (13.790 bar)
- Proof pressure — 300 psi (20.684 bar)
- Burst pressure — 500 psi (34.474 bar)
- Materials — aluminum, stainless steel, low swell Buna N (Nitrile) and Teflon
- Mates Carter brand Models 60505 & 61526 adapters, Models 60554 & 61654 hydrants and all competing valves in accordance with API 1584

Pressure Loss Data

The pressure loss data presented, below, is derived from a single test but is adequate for system analysis. The data shown is inclusive of Model 61525 coupler and its mating part, as indicated.

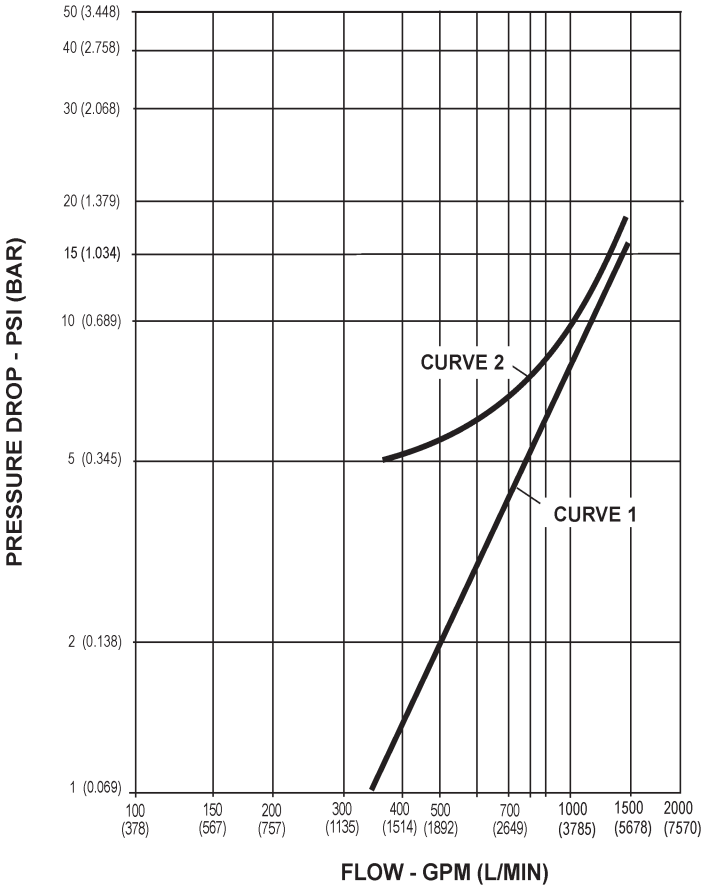

Curve 1 Pressure loss of Model 61525 mated with Model 60505 adapter

Curve 2 Pressure loss of Model 61525 mated with Model 60554D hydrant valve

Ordering Data

There are two basic couplers to which various modifications may be added by option letter as shown in the table below. The two basic units are as follows:

Model 61525

Basic coupler with outlet to mate Carter brand accessories with rigid operating handle and externally mounted dust cap. 2 inch stroke.

Model 61525S

Same as Model 61525 coupler except 1.75 inch stroke to mate very early API valves prior to release of API bulletin1584.

The weight of the basic is 13.0 lbs (5.897 kg)

Option Letter	Description	Weight lbs	(kg)
B	Replaces rigid handle with folding handle (41731)	-0.1	(-0.045)
C	Adds product selection (41802)	+0.1	(0.045)
E	Adds 90° elbow with 3/4 inch sense port and male half QD to mate female QD (44526) (41730-*, see option K-P)	+3.1	(1.406)
F	Same as option E, less sense port (41622)	+3.1	(1.406)
*K	Adds 3 inch NPT female half QD with carrying handle (41730-3)	+4.0	(1.814)
*L	Adds 3 inch BSPP female half QD with carrying handle (41730-4)	+4.1	(1.860)
*M	Adds 4 inch NPT female half QD with carrying handle (41730-1)	+2.9	(1.315)
*N	Adds 4 inch BSPP female half QD with carrying handle (41730-2)	+3.2	(1.451)
*P	Adds 4 inch ASSPT female half QD with carrying handle (60740)	+2.9	(1.315)
W	Adds carriage assembly (60532B)	+6.25	(2.835)

* Option E or F must be ordered with either options K, L, M, N or P

Example:

61525BEK 4 inch coupler with folding handle, 3 inch NPT outlet QD with carrying handle, dust cap and collar stop assembly. Weight - 20.3 lbs (9.208 kg).

Envelope Dimensions

The drawing (right) provides envelope dimensions for installation purposes only. They are not intended for inspection purposes.

Dimensions shown in inches (millimeters).

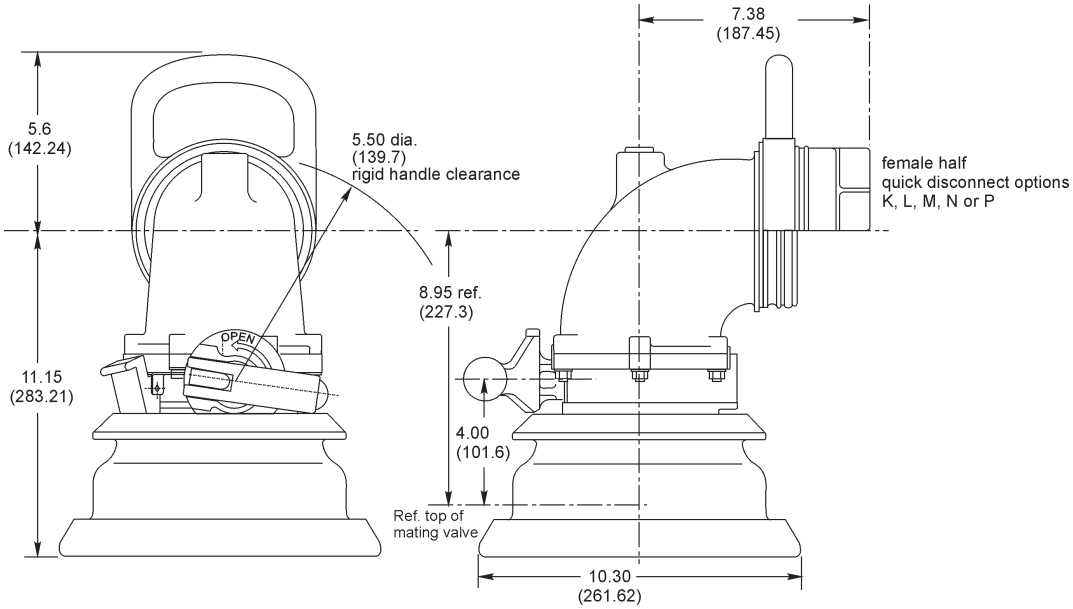

Eaton
Aerospace Group
Conveyance Systems Division
9650 Jeronimo Road
Irvine, California 92618
Phone: (949) 452 9500
Fax: (949) 452 9992

Eaton
Aerospace Group
Conveyance Systems Division
90 Clary Connector
Eastanollee, Georgia 30538
Phone: (706) 779 3351
Fax: (706) 779 2638

Eaton
Aerospace Group
Conveyance Systems Division
300 South East Avenue
Jackson, Michigan 49203-1972
Phone: (517) 787 8121
Fax: (517) 789 2947

Eaton
Aerospace Group
Conveyance Systems Division
11642 Old Baltimore Pike
Beltsville, Maryland 20705
Phone: (301) 937 4010
Fax: (301) 937 0134

Eaton
Aerospace Group
Conveyance Systems Division
15 Pioneer Ave.
Warwick, Rhode Island 02888
Phone: (401) 781 4700
Fax: (401) 785 4614

Eaton S. A.
Aerospace Group
Conveyance Systems Division
2 Rue Lavoisier BP 54 78310
Coignieres, France
Phone: (33) 130 69 30 00
Fax: (33) 130 69 30 56

Eaton Limited
Aerospace Group
Conveyance Systems Division
Broad Ground Road
Lakeside, Redditch
Worcestershire
B98 8YS
United Kingdom
Phone: (44) 1527 517555
Fax: (44) 1527 517556

Eaton S.A
Aerospace Group
Conveyance Systems Division
62 Chemin De Pau
64121 Serres-Castet
France
Phone: (33) 559 333 864
Fax: (33) 559 333 865

Eaton Germany GmbH
Aerospace Group
Conveyance Systems Division
Rudolf-Diesel-Strasse 8
82205 Gilching
Germany
Phone: (49) 8105 750
Fax: (49) 8105 7555

Vickers Systems Pte Ltd
Aerospace Group
Conveyance Systems Division
Lot 512, Jalan Delima
Batamindo Industrial Park
Batam 294533, Indonesia
Phone: (62) 770 611823
Fax: (62) 770 611821

Powering Business Worldwide

Eaton
Aerospace Group
9650 Jeronimo Road
Irvine, California 92618
Phone: (949) 452 9500
Fax: (949) 452 9555
www.eaton.com/aerospace

©2011 Eaton
All Rights Reserved
Printed In USA
Form No. TF100-85B
September 2011