Carter® Brand

Hydrant Coupler — 4 Inch API Style

Model 64804

Powering Business Worldwide

Design Concepts

Eaton's Carter brand Model 64804 coupler is derived from the standard Model 64802 digital coupler to provide an excess flow control feature. The same features introduced in the earlier Models 64800/ 64802 couplers have been incorporated in Model 64804.

Features

- Mates all standard hydrant valves in accordance with API bulletin 1584
- Standard excess flow control closes coupler if flow exceeds set flow rate
- Folding operating handle standard
- 2, 2-½, 3 & 4 inch NPT or BSPP outlet threads available
- Studs used for connecting lower half and to affix the optional carriage assembly
- Outlet of elbow flanged to accept various outlet male adapter fittings, reducing maintenance costs if male fitting is damaged
- Options to mate to older quick disconnects (QD) available
- Thumb latches on QD — easier to remove from hose with no tools
- Optional carrying handle available at disconnect
- Lower half of coupler (connecting unit to hydrant) has not been changed
- No adjustments on coupler. All adjustments are accomplished on digital pressure control module.
- Suitable for operating pressures of 200 psig (13.79 bar) and system proof pressure of up to 450 psig (31.026 bar)
- Pressure drop — 24 psi (1.655 bar) across mating Model 60554 hydrant valve and coupler
- Excess flow rate feature adjustable from 700-1100 USgpm (2649-4163 l/min)

Operation Information

Connection to the hydrant valve is in accordance with the industry API 1584 interface standard.

Model 64804 is a direct spring loaded pressure control unit that is controlled only by the exclusive Carter brand digital pressure control system. Full details of this system are outlined in the Model 64235 catalog sheet (TF100-104A). Its design is nearly identical to the widely used Model 60700-1 and the newer Model 64800 coupler. However, certain features have been modified to allow it to be operated digitally. Fuel pressure presented to the operating chamber through the command hose from the vehicle mounted solenoid manifold assembly (Model 64302, 64303 or 64304, as required by the system design) causes the coupler control elbow valve to open. This establishes flow through the system. Digital commands to the manifold further command the coupler trim to a position to effect control of the pressure in the system. No air pressure is required to achieve system control, unlike the earlier Model 60700-1 and newer Model 64800, or couplers made by competing manufacturers. Pressure control is also achieved without the need for confusing venturi systems.

There are no adjustments required or possible on the coupler. All pressure control adjustments are made on the control module of Eaton's Carter brand Model 64235 digital pressure control system.

An excess flow control module is included as standard on the coupler to effect coupler closure in the event of a hose failure that increases the flow rate catastrophically.

Envelope Dimensions

Dimensions shown in inches (millimeters)

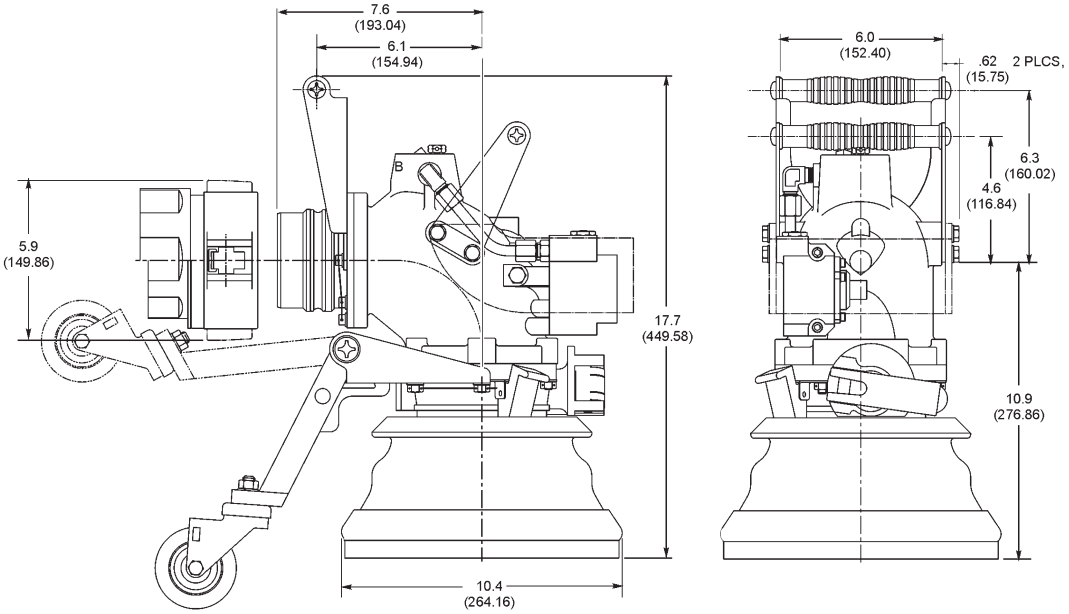

Ordering Data

Various options are available on Model 64804. The part number system is as shown to the right. The complete part number is comprised of four parts, as explained in the tables below.

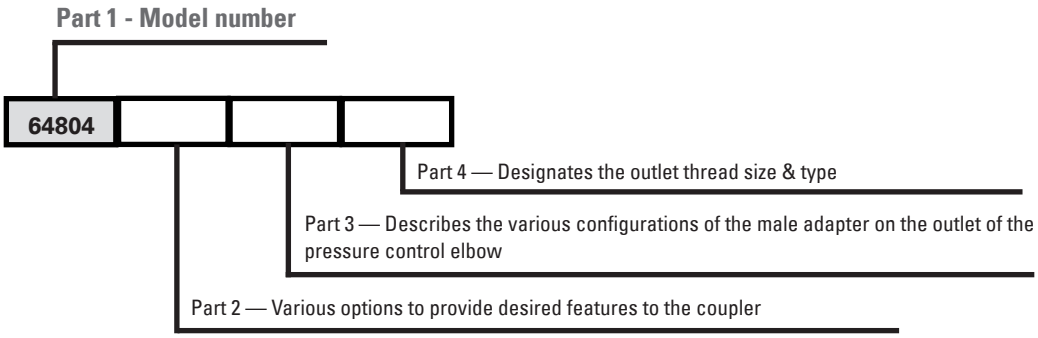

Part 2

One or more of the options shown in the table (right) must be added to the basic model number 64804 to obtain desired features.

Option	Description	Option	Description
C	Adds product selection (41802)	W	Adds carriage assembly (60532)
D	Adds lockwire to coupler joint fasteners	X	Adds safety clip to QD (220822) — with option 2 (part 2), only
E	Adds female dry break coupling for use on sense hose (54245K52). Use with option F	Y	Adds handle assembly at outlet (47182)
F	Adds male dry break QD for the fuel control port. Use with option E		

Part 3

One of the options shown in the table (right) must be added to determine the outlet male adapter configuration.

Option	Description	Option	Description
2	Male adapter fitting to mate standard thumb latched female QD	4	Adds adapter to mate customer furnished Model 60600 (except option K) type QD
3	Male adapter fitting to mate Model 64702/60700-1 female QD		

Part 4

One of the options shown in the table (right) must be added to option 3, above, to specify the outlet thread size and type. See notes below for exceptions.

Option	Description	Option	Description
H	2-½ inch NPT outlet — applicable with options 2 & 3 (part 3)	P	4 inch NPT outlet — applicable with options 3 & 4 (part 3)
K	2-½ inch BSPP outlet — applicable with options 2 & 3 (part 3)	Q	2 inch NPT outlet — applicable with options 2 & 3 (part 3)
L	3 inch NPT outlet — applicable with options 3 & 4 (part 3)	R	4 inch NPSC outlet — applicable only with option 3 (part 3)
M	3 inch BSPP outlet — applicable with options 3 & 4 (part 3)	S	2 inch BSPP outlet — applicable with options 2 & 3 (part 3)
N	4 inch BSPP outlet — applicable with options 3 & 4 (part 3)		

Notes:

1. Part 4 can be left blank when ordering a coupler to be used as a replacement for an existing Model 60700-1, 60600, 60600-1 or 64702 coupler. Part 3 must be filled in properly to acquire a male half to mate the existing female half being used.
2. Part 4 may also be left blank if a Model 64804 coupler is being ordered as a replacement or a spare that will be used with an existing female half (attached to the hose)

Examples:

64804FX2H Coupler with folding handle, dry break fitting in command port, collar stop assembly, safety clip on QD, standard thumb latch QD with 2-½ inch NPT threads

64804FW3 Coupler with dry break fitting in command port, collar stop assembly, carriage assembly and outlet adapter to mate an existing female adapter previously used on Model 60700-1

Eaton
Aerospace Group
Conveyance Systems Division
9650 Jeronimo Road
Irvine, California 92618
Phone: (949) 452 9500
Fax: (949) 452 9992

Eaton
Aerospace Group
Conveyance Systems Division
90 Clary Connector
Eastanollee, Georgia 30538
Phone: (706) 779 3351
Fax: (706) 779 2638

Eaton
Aerospace Group
Conveyance Systems Division
300 South East Avenue
Jackson, Michigan 49203-1972
Phone: (517) 787 8121
Fax: (517) 787 5758

Eaton
Aerospace Group
Conveyance Systems Division
11642 Old Baltimore Pike
Beltsville, Maryland 20705
Phone: (301) 937 4010
Fax: (301) 937 0134

Eaton
Aerospace Group
Conveyance Systems Division
15 Pioneer Ave.
Warwick, Rhode Island 02888
Phone: (401) 781 4700
Fax: (401) 785 4614

Eaton S. A.
Aerospace Group
Conveyance Systems Division
2 Rue Lavoisier BP 54 78310
Coignieres, France
Phone: (33) 130 69 30 00
Fax: (33) 130 69 30 56

Eaton Limited
Aerospace Group
Conveyance Systems Division
Broad Ground Road
Lakeside, Redditch
Worcestershire
B98 8YS
United Kingdom
Phone: (44) 1527 517555
Fax: (44) 1527 517556

Eaton S.A
Aerospace Group
Conveyance Systems Division
62 Chemin De Pau
64121 Serres-Castet
France
Phone: (33) 559 333 864
Fax: (33) 559 333 865

Eaton Fluid Power GmbH
Rudolf-Diesel-Str.8
82205 Gilching
Germany
Phone: 49 (0) 8105 75 0
Fax: 49 (0) 8105 75 55

Vickers Systems Pte Ltd
Aerospace Group
Conveyance Systems Division
Lot 512, Jalan Delima,
Batamindo Industrial Park
Batam 294533, Indonesia
Phone: (62) 770 611823
Fax: (62) 770 611821

Powering Business Worldwide

Eaton
Aerospace Group
9650 Jeronimo Road
Irvine, California 92618
Phone: (949) 452 9500
Fax: (949) 452 9555
www.eaton.com/aerospace

©2011 Eaton
All Rights Reserved
Printed In USA
Form No. TF100-114B
September 2011