Carter® Brand

Hydrant Coupler — 2-½ Inch

Model 64300

Powering Business Worldwide

Design Concepts

Eaton's Carter brand Model 64300 hydrant coupler is designed to connect a hydrant servicer to a hydrant valve which incorporates a 2-½ inch international standard three lug aircraft bayonet adapter. Model 64300 is a lightweight, rugged coupler that utilizes many parts common to Eaton's Carter brand Model 64250 nozzle.

Features

- Improved swivels incorporated in elbow for easier operation
- Many of the parts are identical and, therefore, interchangeable with the Model 64250 nozzle
- Self-adjusting pressure loaded nose seal automatically compensates for temperature extremes, side loads and worn adapters
- Mates with 2-½ inch international standard bayonet type adapter
- Mechanical interlock prevents fuel flow until coupler is secured to hydrant adapter. Coupler cannot be disconnected from hydrant valve until fuel flow is stopped.
- Circular handle standard. Also available with rugged loop hands
- Product selection feature available to fit either U.S. standard or Avery Hardoll as options
- Extra heavy duty 90° elbow with double swivels available as an option
- When equipped with shroud with oversized I.D. (option J), can be utilized for bottom loading refuelers

Illustrated Options

The part number of a complete coupler consists of the basic coupler, combined with various options as illustrated below.

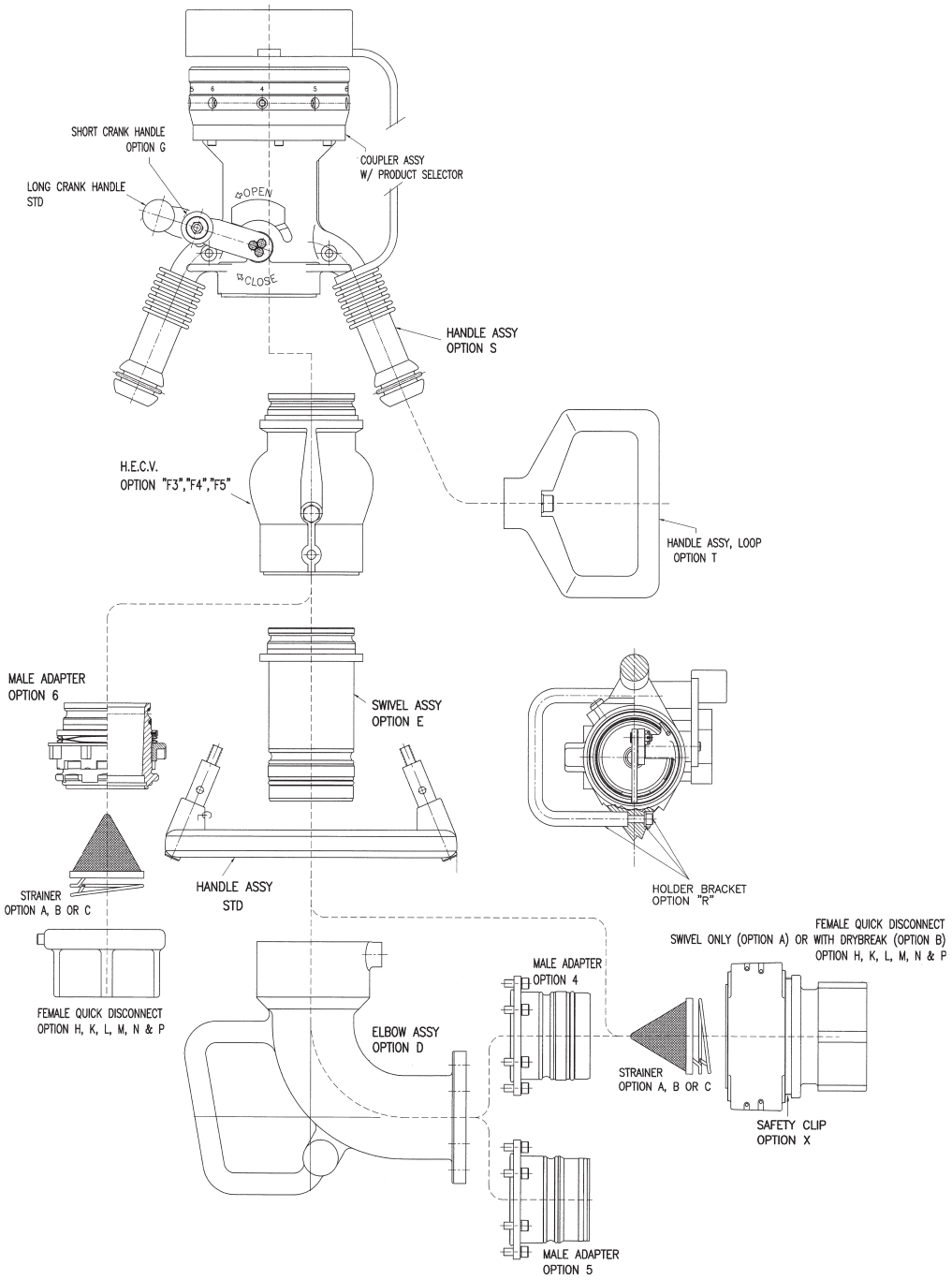

Ordering Data

To achieve a complete coupler, select the basic model number 64300 and add the desired options from parts 2, 3 & 4, below.

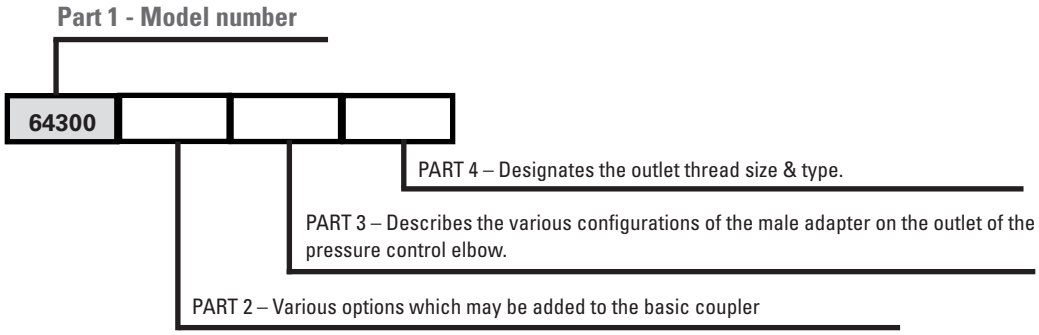

PART 2

One or more of these options may be added to the basic model number to obtain desired features that are optional.

Option Letter	Description	Option Letter	Description
A	Adds 40-mesh strainer	G	Substitutes short crank handle for standard handle
B	Adds 60-mesh strainer	H	Adds product selection to mate positions 1-5 of Avery Hardoll valves
C	Adds 100-mesh strainer	J	Adds shroud with oversized I.D. for bottom loading
D	Adds 90° elbow - terminates in 6-bolt flange to mate various options	P	Adds standard product selection
E	Adds swivel assembly (44701)	R	Adds holder bracket
F3	Adds 35 psi (2.413 bar) HECV	S	Adds short handle assembly
F4	Adds 45 psi (3.103 bar) HECV	T	Adds loop handle assembly
F5	Adds 55 psi (3.792 bar) HECV	X	Adds safety clip to low friction swivel QD

Part 3

One of these options must be added to determine the outlet male adapter configuration.

Option Number	Description
4	Adds short male half adapter to option D elbow
5	Adds Whittaker style male adapter
6	Adds male adapter (can not be used with options D or E)

Part 4

One of these options must be added to specify the outlet thread size and type.

Option Letter	Description
A	Adds non-valved swivel female QD
B	Adds drybreak female QD - applicable to option E (part 2) and option 4 (part 3) only
H	Adds 2-½ inch NPT thread QD
K	Adds 2-½ inch BSPP thread QD
L	Adds 3 inch NPT thread QD
M	Adds 3 inch BSPP thread QD
N	Adds 2 inch BSPP thread QD
P	Adds 2 inch NPT thread QD

Eaton
Aerospace Group
Conveyance Systems Division
9650 Jeronimo Road
Irvine, California 92618
Phone: (949) 452 9500
Fax: (949) 452 9992

Eaton
Aerospace Group
Conveyance Systems Division
90 Clary Connector
Eastanollee, Georgia 30538
Phone: (706) 779 3351
Fax: (706) 779 2638

Eaton
Aerospace Group
Conveyance Systems Division
300 South East Avenue
Jackson, Michigan 49203-1972
Phone: (517) 787 8121
Fax: (517) 789 2947

Eaton
Aerospace Group
Conveyance Systems Division
11642 Old Baltimore Pike
Beltsville, Maryland 20705
Phone: (301) 937 4010
Fax: (301) 937 0134

Eaton
Aerospace Group
Conveyance Systems Division
15 Pioneer Ave.
Warwick, Rhode Island 02888
Phone: (401) 781 4700
Fax: (401) 785 4614

Eaton S. A.
Aerospace Group
Conveyance Systems Division
2 Rue Lavoisier BP 54 78310
Coignieres, France
Phone: (33) 130 69 30 00
Fax: (33) 130 69 30 56

Eaton Limited
Aerospace Group
Conveyance Systems Division
Broad Ground Road
Lakeside, Redditch
Worcestershire
B98 8YS
United Kingdom
Phone: (44) 1527 517555
Fax: (44) 1527 517556

Eaton S.A
Aerospace Group
Conveyance Systems Division
62 Chemin De Pau
64121 Serres-Castet
France
Phone: (33) 559 333 864
Fax: (33) 559 333 865

Eaton Germany GmbH
Aerospace Group
Conveyance Systems Division
Rudolf-Diesel-Strasse 8
82205 Gilching
Germany
Phone: (49) 8105 750
Fax: (49) 8105 7555

Vickers Systems Pte Ltd
Aerospace Group
Conveyance Systems Division
Lot 512, Jalan Delima
Batamindo Industrial Park
Batam 294533, Indonesia
Phone: (62) 770 611823
Fax: (62) 770 611821

Powering Business Worldwide

Eaton
Aerospace Group
9650 Jeronimo Road
Irvine, California 92618
Phone: (949) 452 9500
Fax: (949) 452 9555
www.eaton.com/aerospace

©2011 Eaton
All rights reserved
Printed in USA
Form No. TF100-126B
September 2011