Carter® Brand
Hose End Control Valves

Model 60129-1
Model 47013 Model 44646

Powering Business Worldwide

Eaton's Carter brand hose end control valves (HECVs) provide pressure limitation at the outlet to protect the aircraft while refueling. Several different pressure settings are available to tailor the control system to the customer's requirements. The resultant control pressure curve is flat with little "droop" in pressure up to 300 USgpm (1135 l/min). Downstream surge pressure generated as a result of a rapid rise in downstream pressure (aircraft valve closure) is limited to 75 psi (5.17 bar).

Outlets are available to mate the HECV to any Carter or Whittaker brand nozzle. Threaded inlet and outlet adapter fittings are also available for alternative installations away from a nozzle. A variety of inlet fittings are available to mate industry standard hose connections.

Eaton's Carter brand offers three basic models of HECVs, Models 60129-1, 44646 and 47013. All three are for use on underwing refueling nozzles and one, Model 60129-1, may be used for line mounted applications.

Features

- Lightweight
- Low pressure drop — see curve on page 4
- Direct spring acting
- Three pressure settings available (see Ordering Data on page 3 for details)
- Downstream surge pressure control — 75 psi (5.17 bar) max
- Fail safe design
- Model 60129-1 replaces older Model 40680 (part number change only)
- Mechanical blockout device Model 61656 for system test and defueling now available — no connection to fuel pressure required

Operation

A hose end control valve is a direct spring loaded piston device that limits pressure sensed at its outlet (hence at the inlet of the nozzle, since the HECV is mounted on the inlet to the nozzle). The HECV is designed to react to changes of outlet pressure to hold a relatively constant pressure with adequate inlet pressure. Pressure limiting is a function of the spring that loads the piston or poppet. In addition to limiting the maximum pressure at its outlet during flow conditions, the HECV is designed to also limit surge pressures caused by aircraft (downstream) valve closures. Lockup pressure (downstream pressure trapped between a closed HECV and a closed downstream system) is also limited.

The highest pressure limit controlled by the HECV will be apparent as the flow rate decreases from a maximum flow condition and as the aircraft tank valves begin to close. As in all controlling devices, the HECV requires a back pressure (system pressure drop) to perform properly. If the downstream pressure is too low, or if the upstream pressure is too low, the HECV will simply stroke fully open and there will be no control. This is quite apparent at the higher flows into an empty aircraft. The HECV only controls when the downstream pressure becomes within the range of its control.

Typical Characteristics

- Surge pressure control — 75 psi (5.17 bar) maximum with 0.5 second valve closure minimum
- Lock up pressure — 10 psi (0.689 bar) maximum over spring setting
- Pressure limitation — 5 psi (0.345 bar) over spring setting with inlet pressure up to 100 psi (6.895 bar)
- Hysteresis (difference in pressure limits between increasing and decreasing flow rates) — pressure limits with decreasing flow rates will normally be slightly greater than for increasing flow rates
- Defueling is possible through unit, however a block out device required to maintain maximum flow. Block out device is also recommended if system secondary control valve is to be checked. Use Carter brand Model 61656 block out device (see "Special Tools" brochure [TF100-116A] for details).

Model 44646

Model 47013

Model 60129-1
(Shown with quick disconnect)

Dimensions shown in inches (millimeters)

Options for Model 60129-1	Length inches	(mm)
D6, DR, D7	8.30	210.82
D6H, D6K, D6L, D6M	10.20	259.08
DE, FR, F6, F7	.60	19.304
D7H, D7K, D7L, D7M	1.32	287.52
FE	.90	175.26
F6H, F6K, F6L, F6M	9.50	241.30
F7H, F7K, F7L, F7M	10.62	269.74
NE	8.16	207.26
NR, N6, N7	8.86	225.04
N6H, N6K, N6L, N6M	0.76	273.30
N7H, N7K, N7L, N7M	1.88	301.75
TE	6.72	170.69
T6H, T6K, T6L, T6M	9.32	236.72
TR, T6, T7	7.42	188.46
T7H, T7K, T7L, T7M	10.44	265.17

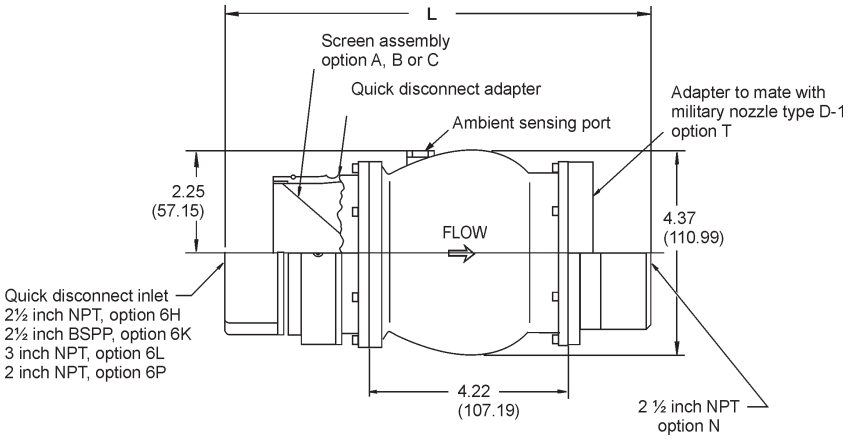

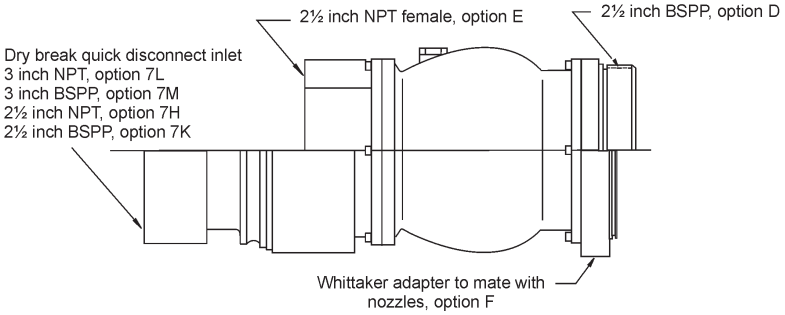

Model 44646

Designed for use with Eaton's Carter brand nozzle Models 64348, 64200, 64349 or 64201. It has a swivel joint on both ends.

Available with 35, 45 or 55 psi springs (2.413, 3.103 or 3.792 bar).

There are no additional options available for Model 44646.

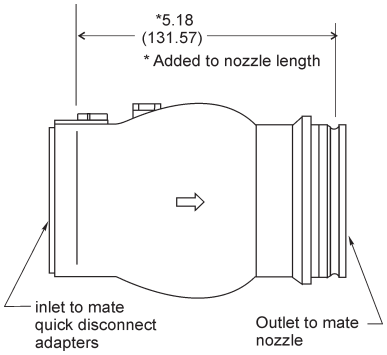

Model 47013

Designed for use on Eaton's Carter brand nozzle Model 64049 or on Model 64348 or 64349 nozzles that incorporate a Model 64015 ball valve, or for use on any Carter brand nozzle with the dual HECV configuration. Swivel on the outlet end only.

Available with 35, 45 or 55 psi springs (2.413, 3.103 or 3.792 bar).

There are no additional options available for Model 47013.

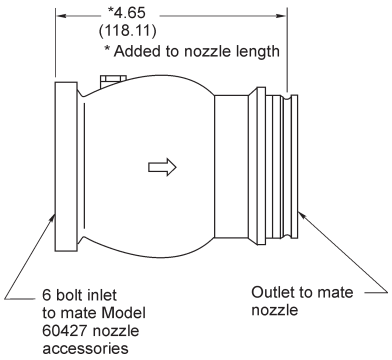

The curves presented (right) are typical for the inlet pressures and flow rates shown in a system with appropriate back pressure. These curves are applicable to all Eaton Carter brand HECV models.

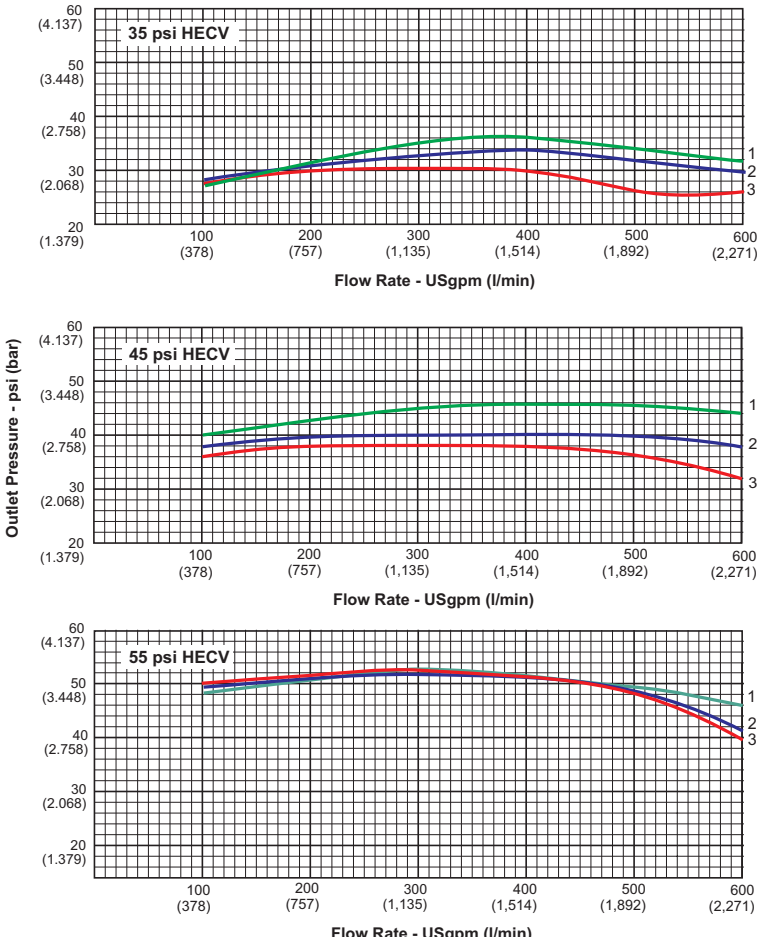

Curve 1	Control pressure with 100 psi (6.895 bar) inlet pressure
Curve 2	Control pressure with 90 psi (6.205 bar) inlet pressure
Curve 3	Control pressure with 75 psi (5.171 bar) inlet pressure

Ordering Data

Model 60129-1

For installation on Eaton's Carter brand Model 60427, Whittaker Model F116/F117 or Avery Hardoll Model HU3000/HU4000 nozzles or for line mounted applications. The part number of a complete 60129-1 HECV will consist of four basic parts as shown at right.

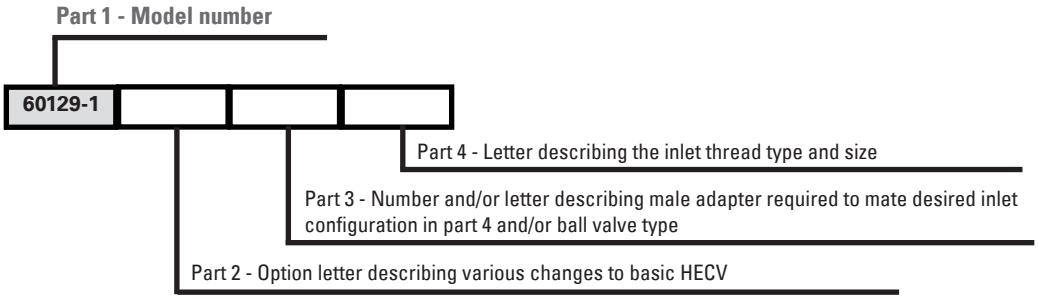

Part 2

The options shown (right) may be added as part 2 of the part number as indicated above to order a unit to meet your requirements.

Option	Description
*A	40- mesh screen
*B	60-mesh screen
*C	100-mesh screen
D	Adds 2-½ inch BSPP male straight outlet
E	Adds 2-½ inch NPT female straight inlet
**F	Adds outlet adapter to mate Whittaker F116/F117 nozzle
**3	Specifies 35 psi (2.413 bar) spring setting
**4	Specifies 45 psi (3.103 bar) spring setting
**5	Specifies 55 psi (3.792 bar) spring setting
N	Adds 2-½ inch NPT male straight outlet
R	Adds inlet adapter to mate flight refueling disconnect
T	Adds adapter flange to outlet to mate military nozzle inlet
W	Inlet & outlet flanges to mate Whittaker F116/F117 nozzles

* Options A, B & C only available when a male half from part 3 or option R is specified

** The spring setting number must be included at the end of part 2. If not specified, a 45 psi (3.103 bar) spring setting will be supplied.

Part 3

One option numbers from part 3 must be included to specify the type of inlet configuration desired, except when option R is ordered. May be ordered with the inlet terminating in an adapter half only, if desired. In this case leave part 4 blank. If a female half QD or dry break is desired, part 4 must be completed.

Option	Description	Option	Description
6	Adds male adapter half to mate standard female QD Model 60679 & old style dry break QD Model 60672-1	7	Adds male adapter half to mate Model 61154 dry break

Part 4

One of the following letters must be included as part 4, as indicated, to specify the inlet thread and size.

Option	Description	Option	Description
H	Inlet thread — 2-½ inch NPT	M	Inlet thread — 3 inch BSPP
K	Inlet thread — 2-½ inch BSPP	P	Inlet thread — 2 inch NPT
L	Inlet thread — 3 inch NPT		

Examples:

60129-1	This unit is intended for use on Model 60427 nozzle or on 64049, 64348 or 64349 nozzles when a dual HECV setup is used
60129-14	45 psi (3.103 bar) HECV with inlet and outlet to mate Model 60427 nozzle (formerly ordered as 40680-45 or 60129-1-45)
60129-1C56K	55 psi (3.792 bar) HECV with 100-mesh screen, outlet to mate Model 60427 nozzle and inlet with 2-½ inch BSPP QD
44646	For installation on Models 64348, 64200, 64349 or 64201 nozzles. This unit may also be used on older nozzle Models 61428 or 61429. It has ball swivel joints on both ends. Order this HECV by the model number 44646 followed by the desired spring setting, -35, -45 or -55.
47013	For installation on Model 64348 or 64349 nozzles, either in conjunction with a Model 64015 ball valve or when a dual HECV installation is desired. This HECV has a 6-bolt flanged inlet and a ball joint swivel outlet connection to mate the above nozzles. Order this HECV by model number 47013, followed by the desired spring setting, -35, -45 or -55.

Eaton
Aerospace Group
Conveyance Systems Division
9650 Jeronimo Road
Irvine, California 92618
Phone: (949) 452 9500
Fax: (949) 452 9992

Eaton
Aerospace Group
Conveyance Systems Division
90 Clary Connector
Eastanollee, Georgia 30538
Phone: (706) 779 3351
Fax: (706) 779 2638

Eaton
Aerospace Group
Conveyance Systems Division
300 South East Avenue
Jackson, Michigan 49203-1972
Phone: (517) 787 8121
Fax: (517) 789 2947

Eaton
Aerospace Group
Conveyance Systems Division
11642 Old Baltimore Pike
Beltsville, Maryland 20705
Phone: (301) 937 4010
Fax: (301) 937 0134

Eaton
Aerospace Group
Conveyance Systems Division
15 Pioneer Ave.
Warwick, Rhode Island 02888
Phone: (401) 781 4700
Fax: (401) 785 4614

Eaton S. A.
Aerospace Group
Conveyance Systems Division
2 Rue Lavoisier BP 54 78310
Coignieres, France
Phone: (33) 130 69 30 00
Fax: (33) 130 69 30 56

Eaton Limited
Aerospace Group
Conveyance Systems Division
Broad Ground Road
Lakeside, Redditch
Worcestershire
B98 8YS
United Kingdom
Phone: (44) 1527 517555
Fax: (44) 1527 517556

Eaton S.A
Aerospace Group
Conveyance Systems Division
62 Chemin De Pau
64121 Serres-Castet
France
Phone: (33) 559 333 864
Fax: (33) 559 333 865

Eaton Germany GmbH
Aerospace Group
Conveyance Systems Division
Rudolf-Diesel-Strasse 8
82205 Gilching
Germany
Phone: (49) 8105 75 0
Fax: (49) 8105 7555

Vickers Systems Pte Ltd
Aerospace Group
Conveyance Systems Division
Lot 512, Jalan Delima, Batamindo
Industrial Park
Batam 294533, Indonesia
Phone: (62) 770 611823
Fax: (62) 770 611821

Powering Business Worldwide

Eaton
Aerospace Group
9650 Jeronimo Road
Irvine, California 92618
Phone: (949) 452 9500
Fax: (949) 452 9555
www.eaton.com/aerospace

©2011 Eaton
All Rights Reserved
Printed In USA
Form No. TF100-76B
September 2011