Carter® Brand

Underwing Refueling Nozzle

Model 64049

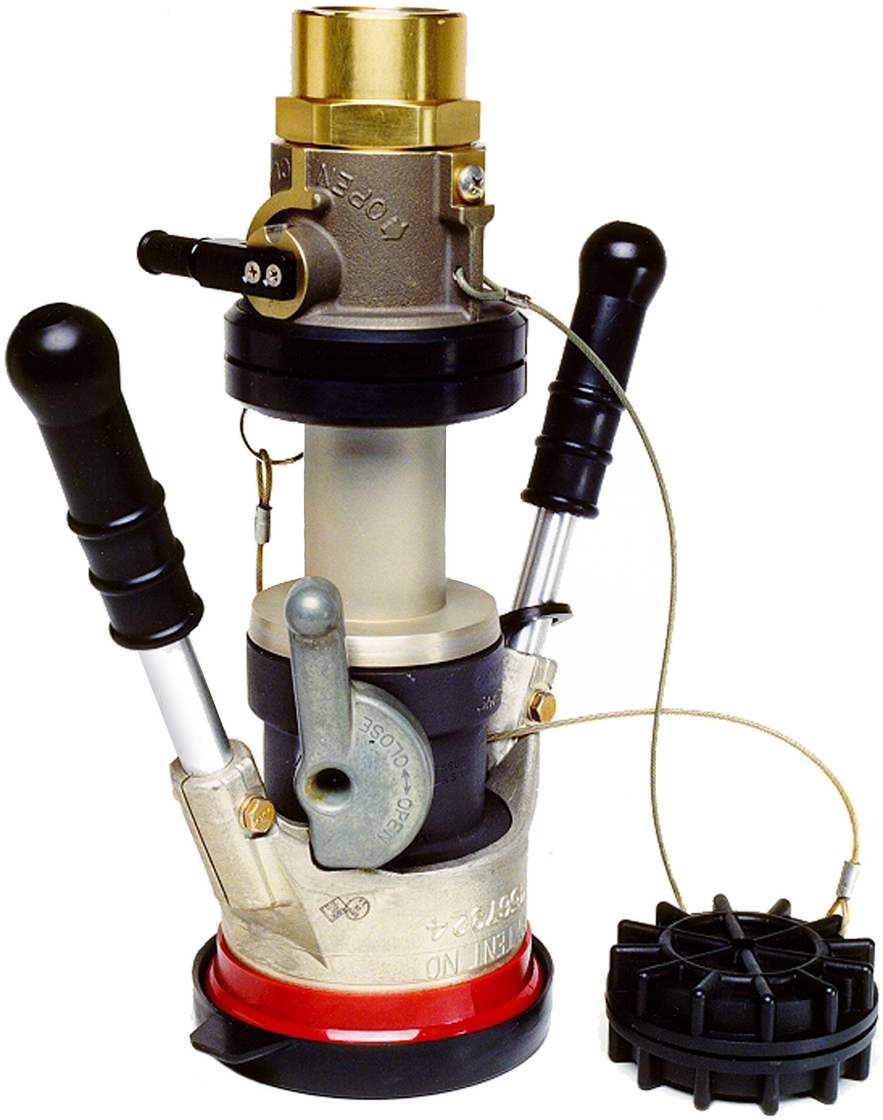

Powering Business Worldwide

Design Concepts

Eaton's Carter brand Model 64049 underwing nozzle is designed for small airfield fixed base operators' (FBOs) use. Model 64049 has an easy to use quick disconnect (QD) for strainer checking, with or without an effective dry break. The underwing nozzle, a derivation of Model 64348, utilizes the Carter brand unisex coupling as the disconnect. Along with this underwing nozzle, Eaton also offers an interchange fitting to effect easy underwing to overwing or closed circuit refueling (CCR) nozzle interchange with a minimum of fuel spillage. See Model 64051 on page 4.

Features

- Unisex coupling used for quick disconnect (QD) or dry break disconnect
- Designed for small airport applications on 1-½ or 2 inch hoses
- Overwing or CCR nozzle to underwing nozzle interchange fitting available
- Integral swivel, independent of QD, makes connection to aircraft easy
- Connects to 3-lug international standard aircraft adapter
- Self-adjusting pressure loaded nose seal. No mechanical adjustments or springs used.
- Leak free under extreme side loads, worn adapters and extreme temperatures
- Long-life stainless steel lead-in ramps interface aircraft adapter for longer life
- Positive interlock — nozzle can't be removed from aircraft in open position
- Flow control handle, of high strength zinc aluminum alloy, fully protected from damage
- Replaceable bicycle-type handles and grips standard for ease of operation. Circular grip also available.
- Two threaded ports in nozzle body for simultaneous vacuum breaker and product sampling fitting installation are standard
- Lightweight and rugged
- Modular construction
- 1-½ & 2 inch female NPT & BSPP threaded QD inlets optional
- 1-½ & 2 inch female NPT & BSPP threaded QD dry break inlets optional
- Optional 40, 60 & 100-mesh screens retained with snap ring for ease of removal
- Bonding cable, vacuum breaker optional

Envelope Dimensions

Dimensions shown in inches (millimeters)

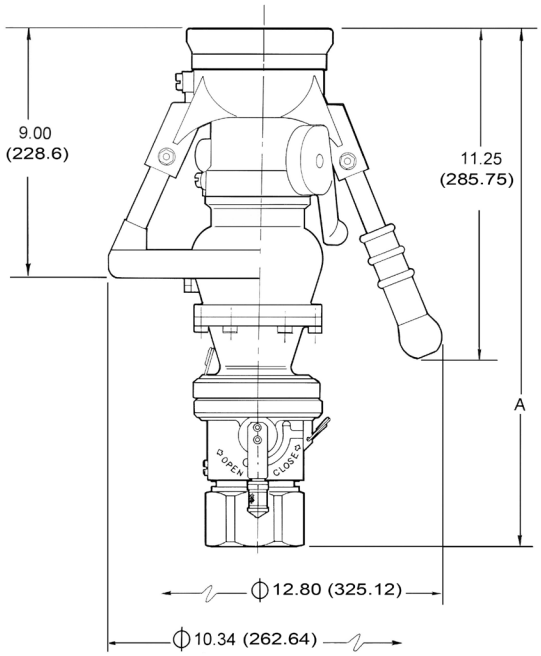

Options	Dim "A" inches	(mm)
2	10.08	(256.03)
2E-H	13.45	(341.63)
2N, P, R, & S	13.65	(346.71)
2M	14.00	(355.60)
2U	14.48	(367.79)
F*3	12.89	(327.41)
F*3E-H	16.26	(413.00)
F*3N, P, R, & S	16.46	(418.08)

*3 (35 psi), 4 (45 psi) or 5 (55 psi) hose end control valves (HECV)

Ordering Data

Part 1

The part number of a complete nozzle consists of four basic parts as illustrated at right.

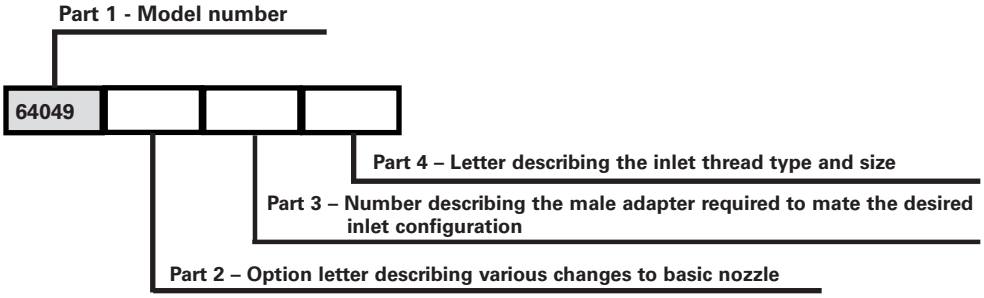

Part 2

Options may be added as part 2 of the part number as indicated (right) to order a unit to meet your requirements.

Option	Description	Option	Description
*A	Adds 40-mesh screen	**F3	Adds 35 psi (2.415 bar) HECV
*B	Adds 60-mesh screen	**F4	Adds 45 psi (3.103 bar) HECV
*C	Adds 100-mesh screen	**F5	Adds 55 psi (3.792 bar) HECV
D	Adds bonding cable	U	Adds round handle grip
E	Adds vacuum breaker		

* Options A, B, & C only available when a male half from part 3 is specified

** To obtain a nozzle with two HECVs, specify two options in series; F5F4 results in 55 psi (3.792 bar) and 45 psi (3.103 bar) units with the 55 psi (3.792 bar) unit assembled as the one nearest the inlet

Part 3

The inlet is specified by adding the appropriate number from the table (right) in conjunction with the appropriate option letter from part 4 below. The nozzle may terminate in a unisex coupling only, if desired. In this case leave part 4 blank. To add a female half QD or dry break, part 4 must be completed.

Option	Description	Option	Description
2	Adds unisex non-valved coupling to inlet of nozzle when no HECV is used	K	Adds dust cap to option 2 or 3
3	Adds unisex non-valved coupling to inlet of nozzle when used with an HECV		

Part 4

One of the following letters must be included as part 4 to specify the inlet type and thread size or to add a dust cap to any of the inlet options below:

Option	Description	Option	Description
E	Adds non-valved unisex coupling with 2 inch FNPT inlet (64051P)	M	Adds non-valved unisex coupling with 2-½ inch FBSPP inlet (64051M)
F	Adds non-valved unisex coupling with 1-½ inch FNPT inlet (64051R)	N	Adds valved unisex coupling with 2 inch FBSPP inlet (64052N)
G	Adds non-valved unisex coupling with 2 inch FBSPP inlet (64051N)	P	Adds valved unisex coupling with 2 inch FNPT inlet (64052P)
H	Adds non-valved unisex coupling with 1-½ inch FBSPP inlet (64051S)	R	Adds valved unisex coupling with 1-½ inch FNPT inlet (64052R)
J	Adds dust cap to any of the inlet configurations E-H, N, P-S	S	Adds valved unisex coupling with 1-½ inch FBSPP inlet (64052S)
		U	Adds non-valved unisex coupling with 2-½ inch FNPT inlet (64051U)

Examples:

64049CD2KEJ	Underwing nozzle with 100-mesh strainer, bonding cable, inlet adapter to mate unisex coupling, with dust cap, and non-valved unisex coupling with 2 inch female NPT threaded inlet with dust cap
64049BEF43JP	Underwing nozzle with 60-mesh strainer, vacuum breaker, 45 psi (3.103 bar) HECV, inlet adapter to mate unisex coupling and dry break (valved unisex coupling) with 2 inch female NPT threaded inlet and a dust cap to mate the dry break coupling

Overwing/ CCR Interchange

Model 64051

Shown below, installed on overwing nozzle not manufactured by Eaton.

See part 4 of Ordering Data section on page 3 for additional information

Examples:

64051DH — 1-½ inch male NPT interchange coupling with dust cap

64051DK — 1-½ inch male BSPP non-swivel interchange coupling with dust cap

Hose End Control Valves

The hose end control valve (HECV), available as option F in part 2 (see Ordering Data, page 3), is designed to provide a maximum control pressure at its outlet (at the pressure sensing port of the nozzle). The control pressure is a function of the main spring that loads the poppet. In addition to limiting downstream pressure under flow conditions, the regulator is designed to limit surge pressures caused by aircraft (downstream) valve closures. Lockup pressure (downstream pressure trapped between a closed regulator and a closed downstream system) is also limited. Refer to Model 60129-1 catalog sheet (TF100-76A) for more details on how this is accomplished.

The following characteristics are typical:

- Normal spring setting (maximum pressure limits will be 5 psi (0.345 bar) greater than spring) — 35 psi, 45 psi (3.103 bar) & 55 psi (3.792 bar) available
- Surge pressure control — 75 psi (5.171 bar) maximum with 0.5 second valve closure (minimum)
- Lock up pressure —10 psi (0.689 bar) maximum over spring setting for 45 psi (3.103 bar) & 55 psi (3.792 bar) HECVs; 20 psi (1.379 bar) maximum over spring setting for 35 psi (2.415 bar) unit
- Pressure limitation — 5 psi over spring setting with inlet pressure up to 100 psi (6.895 bar)
- Hysteresis (difference in pressure limits between increasing and decreasing flow rates) — pressure limits with decreasing flow rates will normally be slightly greater than for increasing flow rates
- Defueling is possible through the HECV. However, a blockout device is required to maintain maximum flow. A blockout device is also recommended if system secondary control valve is to be checked. Use Carter brand blockout device Model 61656.

Pressure Drop Curves

The curves presented (below) are typical for the inlet pressures and flow rates shown in a system with appropriate back pressure. These curves are applicable to all Eaton Carter brand HECV models.

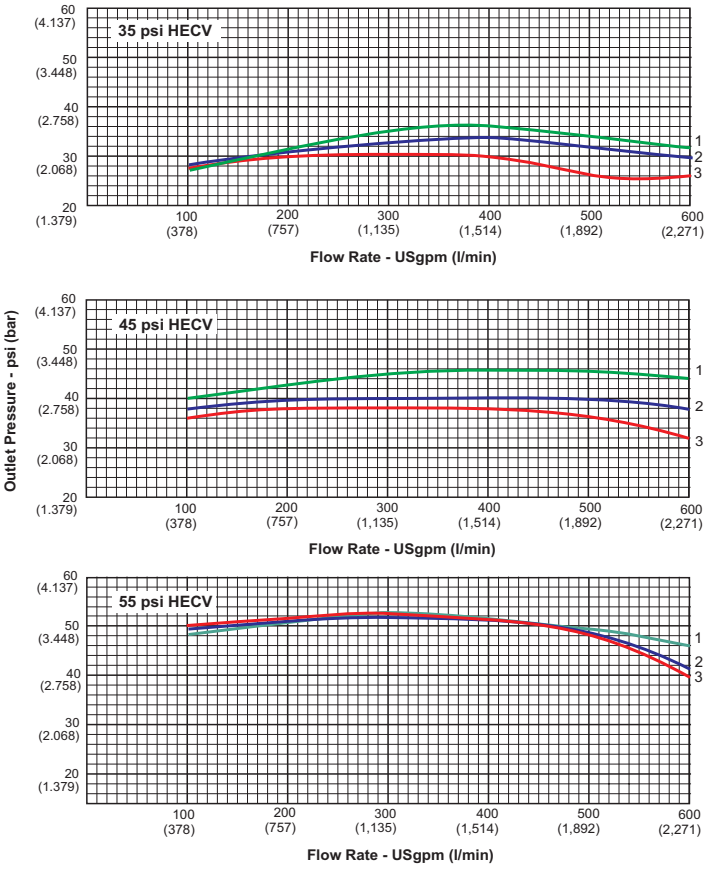

Curve 1	Control pressure with 100 psi (6.895 bar) inlet pressure
Curve 2	Control pressure with 90 psi (6.205 bar) inlet pressure
Curve 3	Control pressure with 75 psi (5.171 bar) inlet pressure

Illustrated Options

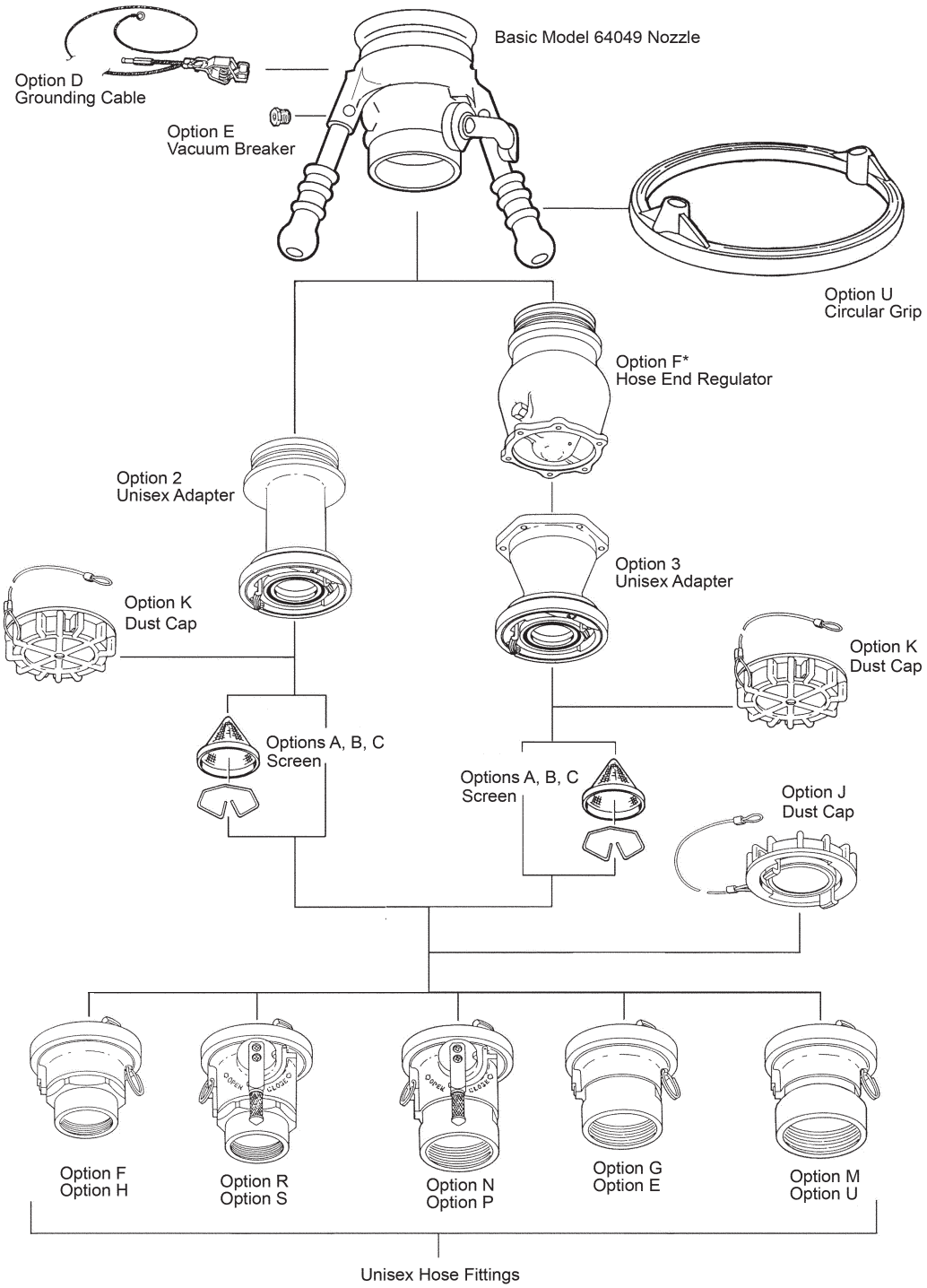

Eaton
Aerospace Group
Conveyance Systems Division
9650 Jeronimo Road
Irvine, California 92618
Phone: (949) 452 9500
Fax: (949) 452 9992

Eaton
Aerospace Group
Conveyance Systems Division
90 Clary Connector
Eastanollee, Georgia 30538
Phone: (706) 779 3351
Fax: (706) 779 2638

Eaton
Aerospace Group
Conveyance Systems Division
300 South East Avenue
Jackson, Michigan 49203-1972
Phone: (517) 787 8121
Fax: (517) 789 2947

Eaton
Aerospace Group
Conveyance Systems Division
11642 Old Baltimore Pike
Beltsville, Maryland 20705
Phone: (301) 937 4010
Fax: (301) 937 0134

Eaton
Aerospace Group
Conveyance Systems Division
15 Pioneer Ave.
Warwick, Rhode Island 02888
Phone: (401) 781 4700
Fax: (401) 785 4614

Eaton S. A.
Aerospace Group
Conveyance Systems Division
2 Rue Lavoisier BP 54 78310
Coignieres, France
Phone: (33) 130 69 30 00
Fax: (33) 130 69 30 56

Eaton Limited
Aerospace Group
Conveyance Systems Division
Broad Ground Road
Lakeside, Redditch
Worcestershire
B98 8YS
United Kingdom
Phone: (44) 1527 517555
Fax: (44) 1527 517556

Eaton S.A
Aerospace Group
Conveyance Systems Division
62 Chemin De Pau
64121 Serres-Castet
France
Phone: (33) 559 333 864
Fax: (33) 559 333 865

Eaton Germany GmbH
Aerospace Group
Conveyance Systems Division
Rudolf-Diesel-Strasse 8
82205 Gilching
Germany
Phone: (49) 8105 750
Fax: (49) 8105 7555

Vickers Systems Pte Ltd
Aerospace Group
Conveyance Systems Division
Lot 512, Jalan Delima
Batamindo Industrial Park
Batam 294533, Indonesia
Phone: (62) 770 611823
Fax: (62) 770 611821

Powering Business Worldwide

Eaton
Aerospace Group
9650 Jeronimo Road
Irvine, California 92618
Phone: (949) 452 9500
Fax: (949) 452 9555
www.eaton.com/aerospace

©2011 Eaton
All Rights Reserved
Printed In USA
Form No. TF100-91B
September 2011