Carter® Brand

Pressure Fueling Nozzle

Model 64200

Powering Business Worldwide

Design Concepts

Building on the success of Eaton's earlier Carter brand Model 64348, the lightweight and rugged Model 64200 pressure refueling nozzle has been designed to increase durability and decrease maintenance costs.

Model 64200 uses the same accessories as the Model 64348 nozzle. All accessories now have stainless steel wear rings in swivel ball joints.

The interlock mechanism is internal to the nozzle body, therefore there are no pins to wear aircraft adapter slots. It has no collar or other moving parts on the exterior of the nozzle (with the exception of the operating lever), thereby reducing the need to replace worn components. The handles are made of a very rugged standard composite material and do not include any metal to bend.

Options include a "U" bracket for nozzle stowage and a one-piece stirrup handle with stowage capability — no need to use the aircraft adapter or a special type of stowage device.

The operating lever, replaceable from the exterior of the nozzle and made of less expensive, more ductile material, is backed up with a boss on the nozzle body to prevent bending. The operating lever has a replaceable knob to eliminate razor sharp abrasion wear patterns prevalent on competitor's nozzles. The lever has also been designed to turn in a counter-clockwise direction (64348 was clockwise). This eliminates interference with some aircraft that are not designed to standards.

Features

- Connects to 3-lug international standard aircraft adapter
- Self-adjusting pressure loaded nose seal. No mechanical adjustments or springs used.
- Sampling fitting installation are standard
- Leak-free under extreme side loads, worn adapters and extreme temperatures
- Low pressure drop
- Two threaded ports in nozzle body for simultaneous vacuum breaker and product
- 2, 2-½ & 3 inch NPT & BSPP threaded quick disconnect (QD) inlets available
- Optional 40, 60 & 100-mesh screens retained with snap ring for ease of removal
- 35 psi (2.413 bar), 45 psi (3.103 bar) & 55 psi (3.792) hose end control valves (HECV) available. See catalog sheet TF100-76A for detailed information.
- Double redundant safety lock on/easy off QD
- Easier swiveling under all conditions. Swivel independent of QD
- Choice of ball valve or dry break disconnect for easy strainer inspection available

Model 64200B2F46H

Includes 60-mesh screen, 45 psi (3.103 bar) HECV with swivel end, male adapter and standard quick disconnect with 2-½ inch NPT thread inlet

Model 64200BR6H

Includes 60-mesh screen, holder bracket, male adapter and standard quick disconnect

Ordering Data

Part 1

Basic model number. Options from parts 2, 3 & 4 must be added to achieve a complete unit.

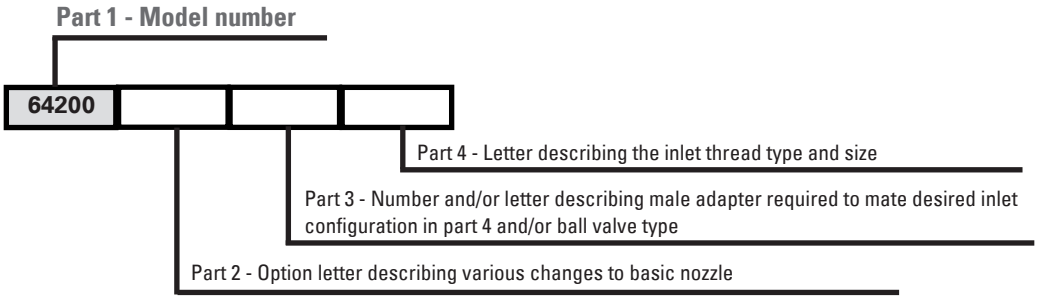

Part 2

The following options may be added as part 2 of the part number as indicated above to order a unit to meet your requirements.

Option	Description	Option	Description
*A	Adds 40-mesh screen	K	Long crank handle (can not be used with option 3 alone. May be used when combined with options F and/or 3).
*B	Adds 60-mesh screen	L	Circular handle
*C	Adds 100-mesh screen	P	Pressure gauge/gauge protector bar
D	Adds bonding cable	Q	Adds fuel sample QD (GTP-235-3/8)
E	Adds vacuum breaker	R	Adds interlock mounting bracket
**F3	Adds 35 psi (2.413 bar) HECV	S	Holder bracket (not needed with option U)
**F4	Adds 45 psi (3.103 bar) HECV	T	Adds male adapter to mate Whittaker F577/F582 inlet
**F5	Adds 55 psi (3.792 bar) HECV	U	Replaces stick handles with stirrup handle with integral interlock bracket
G	Replaces standard handles with long handles	V	Handle, UK style
H	Adds drag ring. To be used with options F and 2. When option 2 is not specified, it is applicable to option 6 or T with F only. Not to be used with option 1.	W	Grounding cable assembly with clip & plug
J	Adds adapter to mate to 60427 style QD	Y	Adds swivel elbow

* Options A, B, C only available when a male half or a ball valve from part 3 is specified

** To obtain a nozzle with two HECVs, specify two options in series. F5F4 results in 55 psi (3.792 bar) and 45 psi (3.103 bar) units with the 55 psi (3.792 bar) assembled as the one nearest the inlet. If two HECVs with different pressures are required, the higher pressure unit should be specified first.

Ordering Data

Part 3

The configuration of the inlet is defined by adding the appropriate number or number and option letter from the table (right) in conjunction with the appropriate option letter from part 4 below. The nozzle may terminate in an adapter half only, if desired. In this case, leave part 4 blank. To obtain a female half, quick disconnect (QD) or dry break, or to complete the specification of the ball valve outlet, part 4 must be completed.

Option	Description	Option	Description
*1	Specifies 60427 flanged type accessory pad on HECV	R	Adds ball valve defuel operating key
*2	Specifies ball swivel end to HECV	4	Adds male adapter, swivel QD
**3	Adds ball valve (64015). May be combined with options D, E, J & R to achieve desired configurations.	6	Adds male adapter half to mate standard QD (44316)
D	Adds glass inspection port to ball valve	7	Adds male adapter half to mate 61154 dry break (44185 with HECV; 44697 without HECV)
E	Adds drag ring to ball valve	9	Adds male adapter half to mate 60427 style QD (43046 with HECV; 44362 without HECV)
J	Adds ball valve operating handle. (If short handle is desired see catalog sheet TF100-88A for order details).		

* If no inlet adapter (options 6, 7 or 9 or ball valve option 3) are specified and a HECV(s) is specified, it is necessary to indicate the inlet configuration, either option 1 or 2, as noted

** The inlet size and configuration option from part 4 must be included in the part number with option 3 to achieve a completed nozzle and ball valve

Part 4

Options specifying the desired thread for adapters or ball valves selected in part 3, above.

Option	Description	Option	Description
H	Inlet thread — 2-1/2 inch NPT	N	Inlet thread — 2 inch BSPP
K	Inlet thread — 2-1/2 inch BSPP	P	Inlet thread — 2 inch NPT
L	Inlet thread — 3 inch NPT	Z	3 inch JIS female disconnect
M	Inlet thread — 3 inch BSPP (not available with option 3)		

Examples:

64200CDF4HR6H	Basic nozzle with a 100-mesh strainer (C), vacuum breaker (E), 45 psi (3.103 bar) HECV (F4), drag ring on the HECV (H), interlock "U" bracket (R), standard disconnect (6) with 2-½ inch NPT female inlet thread (H)
64200CF5F5U6K	Basic nozzle with a 100-mesh strainer (C), dual 55 psi (3.792 bar) HECVs (F5F5) (one closest to the nozzle will have a single swivel, one farthest from the nozzle will be flanged both ends), stirrup handle (U), standard disconnect (6) with 2-½ inch BSPP inlet thread (K)
64200CF43DEJR6K	Basic nozzle with a 100-mesh strainer (C), 45 psi (3.103 bar) HECV (F4) (flanged inlet), flanged outlet ball valve (3) with glass viewing port, drag ring (E), operating handle (J) and defuel key (R) with 2-½ inch BSPP inlet thread

Options & Envelope Dimensions

Solid lines in the illustrated options (below) represent one path of compatible options. Dotted lines connect an alternate path of compatible options.

Dimensions shown in inches (millimeters)

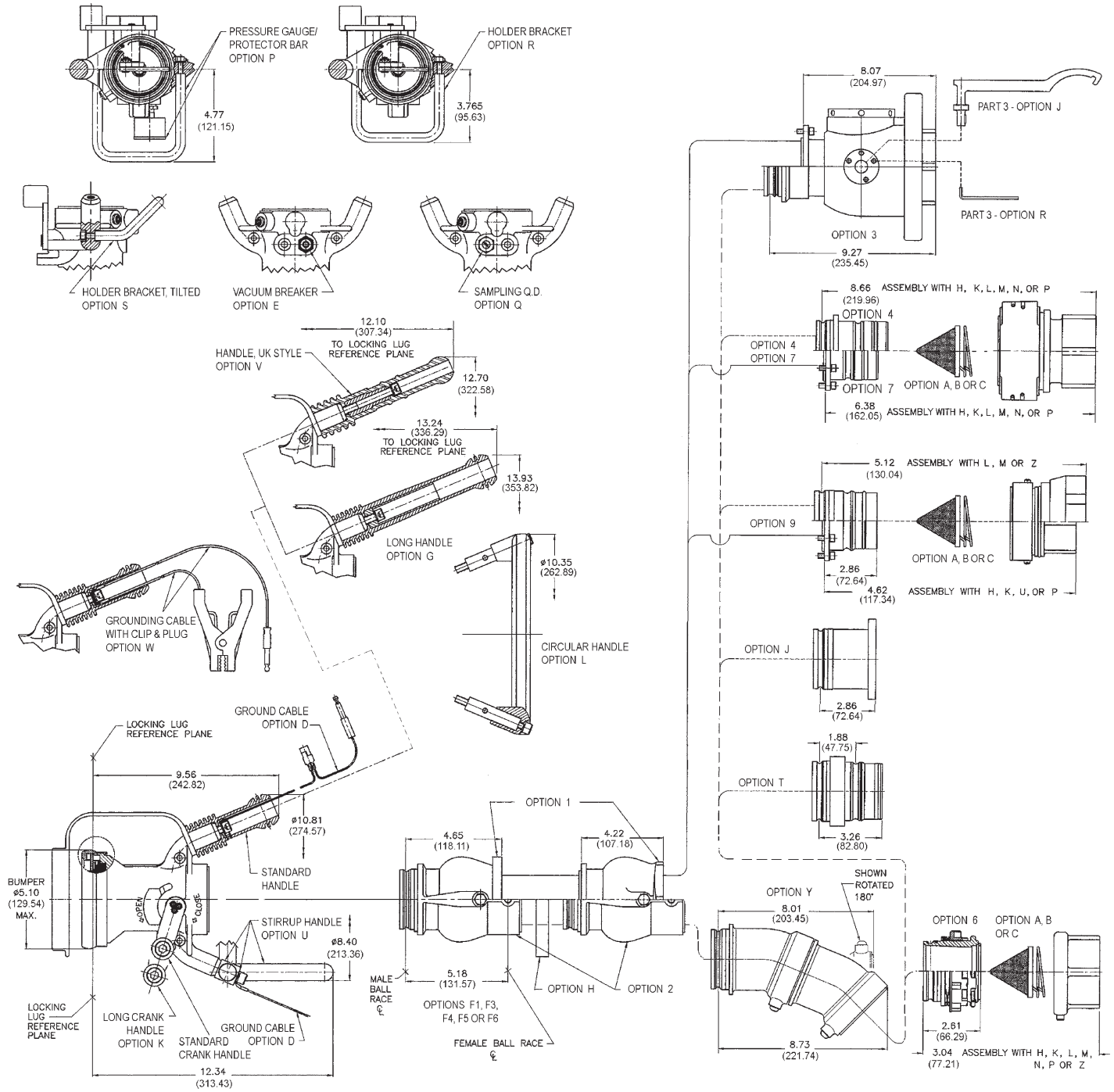

Eaton
Aerospace Group
Conveyance Systems Division
9650 Jeronimo Road
Irvine, California 92618
Phone: (949) 452 9500
Fax: (949) 452 9992

Eaton
Aerospace Group
Conveyance Systems Division
90 Clary Connector
Eastanollee, Georgia 30538
Phone: (706) 779 3351
Fax: (706) 779 2638

Eaton
Aerospace Group
Conveyance Systems Division
300 South East Avenue
Jackson, Michigan 49203-1972
Phone: (517) 787 8121
Fax: (517) 789 2947

Eaton
Aerospace Group
Conveyance Systems Division
11642 Old Baltimore Pike
Beltsville, Maryland 20705
Phone: (301) 937 4010
Fax: (301) 937 0134

Eaton
Aerospace Group
Conveyance Systems Division
15 Pioneer Ave.
Warwick, Rhode Island 02888
Phone: (401) 781 4700
Fax: (401) 785 4614

Eaton S. A.
Aerospace Group
Conveyance Systems Division
2 Rue Lavoisier BP 54 78310
Coignieres, France
Phone: (33) 130 69 30 00
Fax: (33) 130 69 30 56

Eaton Limited
Aerospace Group
Conveyance Systems Division
Broad Ground Road
Lakeside, Redditch
Worcestershire
B98 8YS
United Kingdom
Phone: (44) 1527 517555
Fax: (44) 1527 517556

Eaton S.A
Aerospace Group
Conveyance Systems Division
62 Chemin De Pau
64121 Serres-Castet
France
Phone: (33) 559 333 864
Fax: (33) 559 333 865

Eaton Germany GmbH
Aerospace Group
Conveyance Systems Division
Rudolf-Diesel-Strasse 8
82205 Gilching
Germany
Phone: (49) 8105 750
Fax: (49) 8105 7555

Vickers Systems Pte Ltd
Aerospace Group
Conveyance Systems Division
Lot 512, Jalan Delima
Batamindo Industrial Park
Batam 294533, Indonesia
Phone: (62) 770 611823
Fax: (62) 770 611821

Powering Business Worldwide

Eaton
Aerospace Group
9650 Jeronimo Road
Irvine, California 92618
Phone: (949) 452 9500
Fax: (949) 452 9555
www.eaton.com/aerospace

©2011 Eaton
All Rights Reserved
Printed In USA
Form No. TF100-100B
September 2011