Eaton Corporation
Electrical Services & Systems
13205 SE 30th Street, Ste. 101
Bellevue, WA 98005
United States
1-866-ETN-CARE
Eaton.com

Engineer's Guide to Selective Coordination

Aidan Graham, P.E., Power Systems Engineering Zone Manager and Tom Johnson, Application Engineer

Charles J. Nochumson, P.E., National Application Engineer Phoenix, AZ, USA

Contents

1.0 Executive Summary **1**
1.1 Objectives **1**
1.2 Definitions **1**
2.0 Selective Coordination Background **2**
2.1 General Description **2**
2.2 Selective Coordination Illustration **2**
2.3 Selective Coordination Zones **6**
2.4 Selective Coordination Myths and Facts **7**
3.0 Designing Selectively Coordinated Systems **8**
3.1 Introduction **8**
3.2 Panels in Series **8**
3.3 Breaker Frame Sizing **8**
3.4 Switchgear vs. Switchboards **8**
3.5 Avoiding 480/277 V Lighting Loads **9**
3.6 Automatic Transfer Switch Withstand Ratings **9**
3.7 Fused Elevator Modules vs. Circuit Breakers **9**
3.8 Main Lug Only (MLO) and Through-Feed Lugs (TFL) Panels **13**
3.9 Generator Breaker Selection **13**
3.10 Series Rated Systems **13**
4.0 Supplying Selectively Coordinated Systems **14**
4.1 Introduction **14**
4.2 Steps When Supplying Selectively Coordinated Systems **14**
4.3 Example #1 — Selective Coordination Using Circuit Breakers **17**
4.4 Example #2 — Selective Coordination Using Fusible Switches **19**
4.5 Additional Concerns When Supplying Equipment **20**
5.0 Appendix A — Eaton's Selective Coordination Industry Application **22**

1.0 Executive Summary

The purpose of this document is to provide a guide for designing and supplying equipment for electrical systems that are specifically required to meet the definition of selective coordination, as defined by the National Electrical Code® (NEC®).

1.1 Objectives

This guide will provide specific information on the following topics:

1. A detailed description and background of the selective coordination requirements introduced in the 2005 NEC and expanded in the 2008 NEC.
2. A summary of tips for designing selective coordination systems.
3. What to watch for when supplying equipment that is required to be selectively coordinated.
4. A detailed guide for evaluating selective coordination systems.

1.2 Definitions

The following is a list of common terms that will be used throughout this guide.

Interrupting rating — (IEEE®-Std 1015-2006 definition) The highest current at rated voltage that a device is intended to interrupt under standard test conditions.

Short-time rating — (IEEE-Std 1015-2006 definition) A rating applied to a circuit breaker that, for reasons of system coordination, causes tripping of the circuit breaker to be delayed beyond the time when tripping would be caused by an instantaneous element.

Short-time current — (IEEE-Std 1015-2006 definition) The current carried by a device, an assembly, or a bus for a specified short time interval.

Short-time delay — (IEEE-Std 1015-2006 definition) An intentional time delay in the tripping of a circuit breaker which is above the overload pickup setting.

Overload (NEC Article 100 definition) Operation of equipment in excess of normal, full-load rating, or of a conductor in excess of rated ampacity that, when it persists for a sufficient length of time, would cause damage or dangerous overheating. A fault, such as short circuit or ground fault, is not an overload.

Short-circuit — (IEEE Std 1015-2006 definition) An abnormal connection (including an arc) of relatively low impedance, whether made accidentally or intentionally, between two points of different potentional.

Withstand Rating — (IEEE Std 1015-2006) The maximum root mean square (rms) total current that a circuit breaker can carry momentarily without electrical, thermal or mechanical damage or permanent deformation.

Eaton Corporation
Electrical Services & Systems
13205 SE 30th Street, Ste. 101
Bellevue, WA 98005
United States
1-866-ETN-CARE
Eaton.com

Aidan Graham, P.E., Power Systems Engineering Zone Manager and Tom Johnson, Application Engineer

Charles J. Nochumson, P.E., National Application Engineer Phoenix, AZ, USA

2.0 Selective Coordination Background

2.1 General Description

The main goal of selective coordination is to isolate the faulted circuit, while maintaining power to the balance of the electrical distribution system. For some time, the NEC has required "selective coordination" in elevators, escalators and other equipment covered under Article 620. In the 2005 NEC, this requirement was expanded to include Emergency Systems (Article 700.27), as well as Legally Required Standby Systems (Article 701.18). In addition, NEC 517.26 Application of Other Articles included the requirement for selective coordination in essential electrical systems of Health Care Facilities. The 2008 addition of NEC further expanded selective coordination requirement in the new Article 708 for Critical Operations Power Systems (COPS).

The NEC definitions for selective coordination and overcurrent are as follows:

Selective Coordination. Localization of an overcurrent condition to restrict outages to the circuit or equipment affected, accomplished by the choice of overcurrent protective devices and their ratings or settings.

Overcurrent. Any current in excess of the rated current of equipment or the ampacity of a conductor. It may result from overload, short-circuit or ground fault.

The following NEC articles require selective coordination:

Elevators, Dumbwaiters, Escalators, Moving Walks, Wheelchair Lifts and Stairway Chair Lifts — Article 620.62

Selective Coordination. Where more than one driving machine connecting means is supplied by a single feeder, the overcurrent protective devices in each disconnecting means shall be selectively coordinated with any other supply side overcurrent protective devices.

Emergency Systems — Article 700.27

Coordination. Emergency system(s) overcurrent devices shall be selectively coordinated with all supply side overcurrent protective devices.

Legally Required Standby Systems — Article 701.18

Coordination. Legally required standby system(s) overcurrent devices shall be selectively coordinated with all supply side overcurrent protective devices.

Critical Operations Power Systems — Article 708.54

Coordination. Critical operations power system(s) overcurrent devices shall be selectively coordinated with all supply side overcurrent protective devices.

In addition, Article 708.52:

(B) states: Feeders. Where ground-fault protection is provided for operation of the service disconnecting means of feeder disconnecting means as specified by 230.95 or 215.10, an additional step of ground-fault protection shall be provided in all next level feeder disconnecting means downstream toward the load…"

(D) states: Selectivity. Ground fault protection for the operation of the service and feeder disconnecting means shall be fully selective such that the feeder device, but not the service device, shall open on ground faults on the load side of the feeder device. A six-cycle minimum separation between service and feeder ground-fault tripping bands shall be provided. Operating time of the disconnecting devices shall be considered in selecting the time spread between these bands to achieve 100 percent selectivity.

2.2 Selective Coordination Illustration

Figure 2.1 illustrates a sample electrical distribution where selective coordination is achieved. In this example, the circuit breaker closest to the fault location interrupts, while all other circuit breakers upstream remain closed.

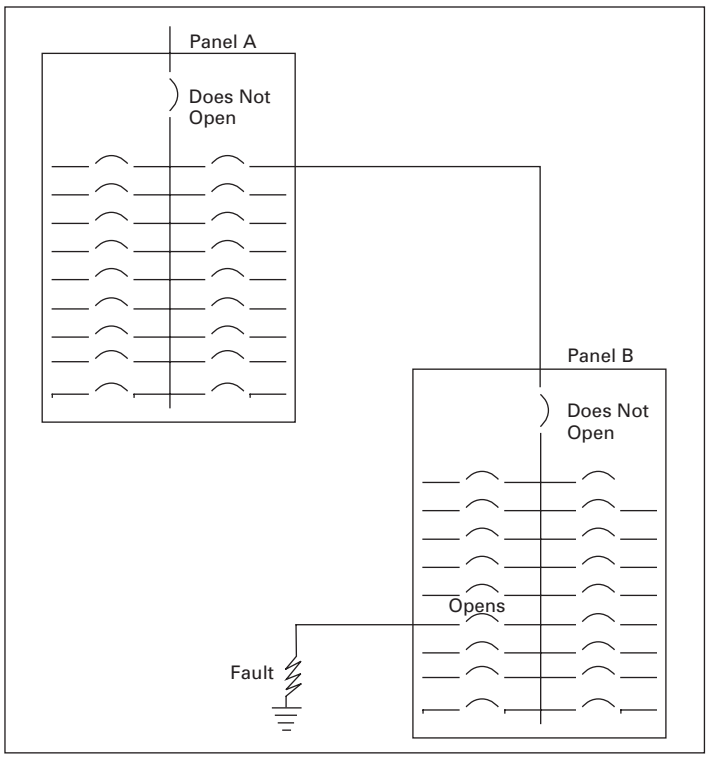

FIGURE 2.1. SAMPLE SELECTIVELY COORDINATED SYSTEM

The figures on the following pages illustrate selectively coordinated systems utilizing molded-case circuit breakers (MCCBs), low-voltage power circuit breakers (LVPCBs) and fuses.

Eaton Corporation
Electrical Services & Systems
13205 SE 30th Street, Ste. 101
Bellevue, WA 98005
United States
1-866-ETN-CARE
Eaton.com

Aidan Graham, P.E., Power Systems Engineering Zone Manager and Tom Johnson, Application Engineer

Charles J. Nochumson, P.E., National Application Engineer Phoenix, AZ, USA

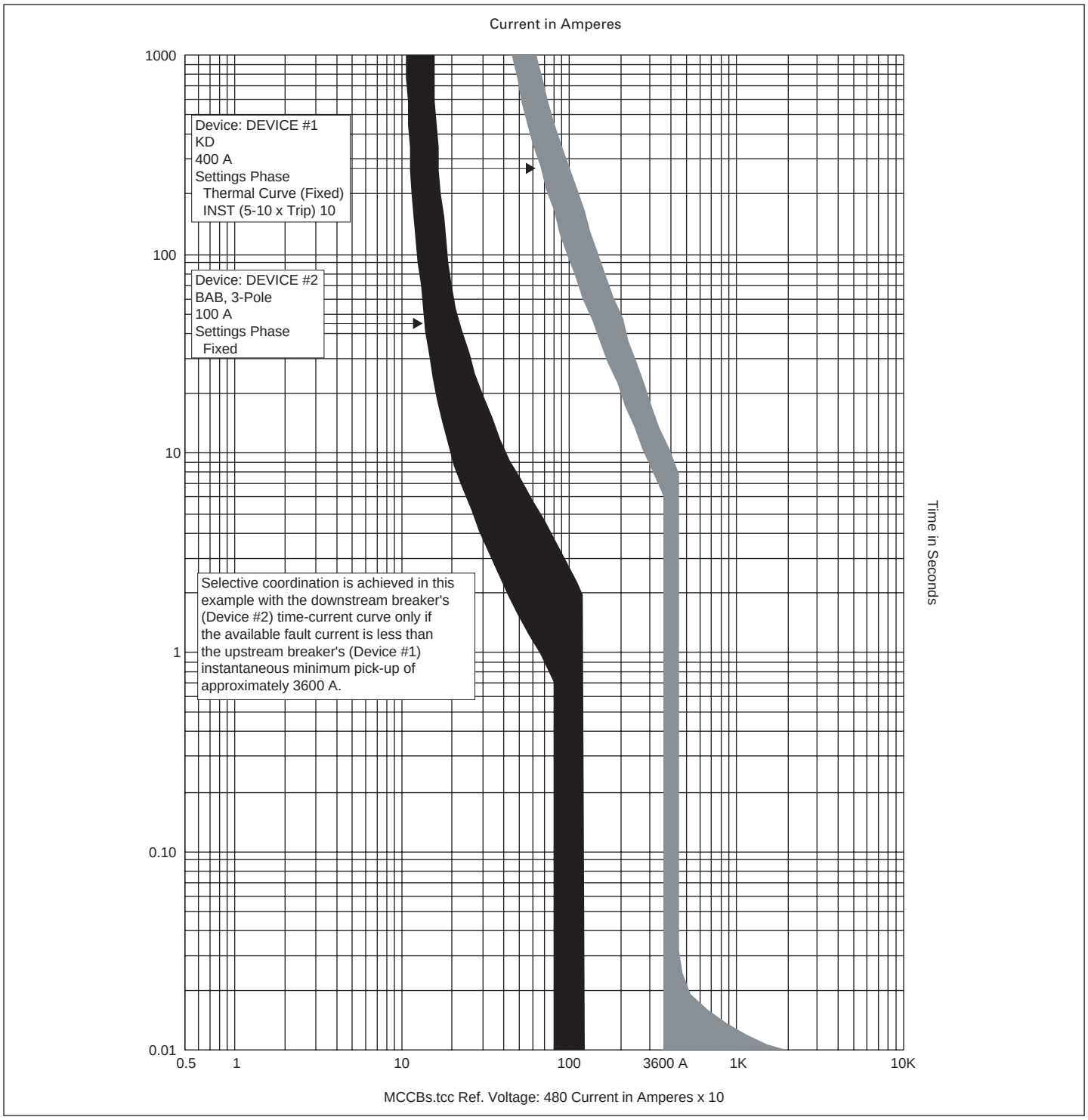

FIGURE 2.2. SELECTIVE COORDINATION UTILIZING MCCBs

Eaton Corporation
Electrical Services & Systems
13205 SE 30th Street, Ste. 101
Bellevue, WA 98005
United States
1-866-ETN-CARE
Eaton.com

Aidan Graham, P.E., Power Systems Engineering Zone Manager and Tom Johnson, Application Engineer

Charles J. Nochumson, P.E., National Application Engineer Phoenix, AZ, USA

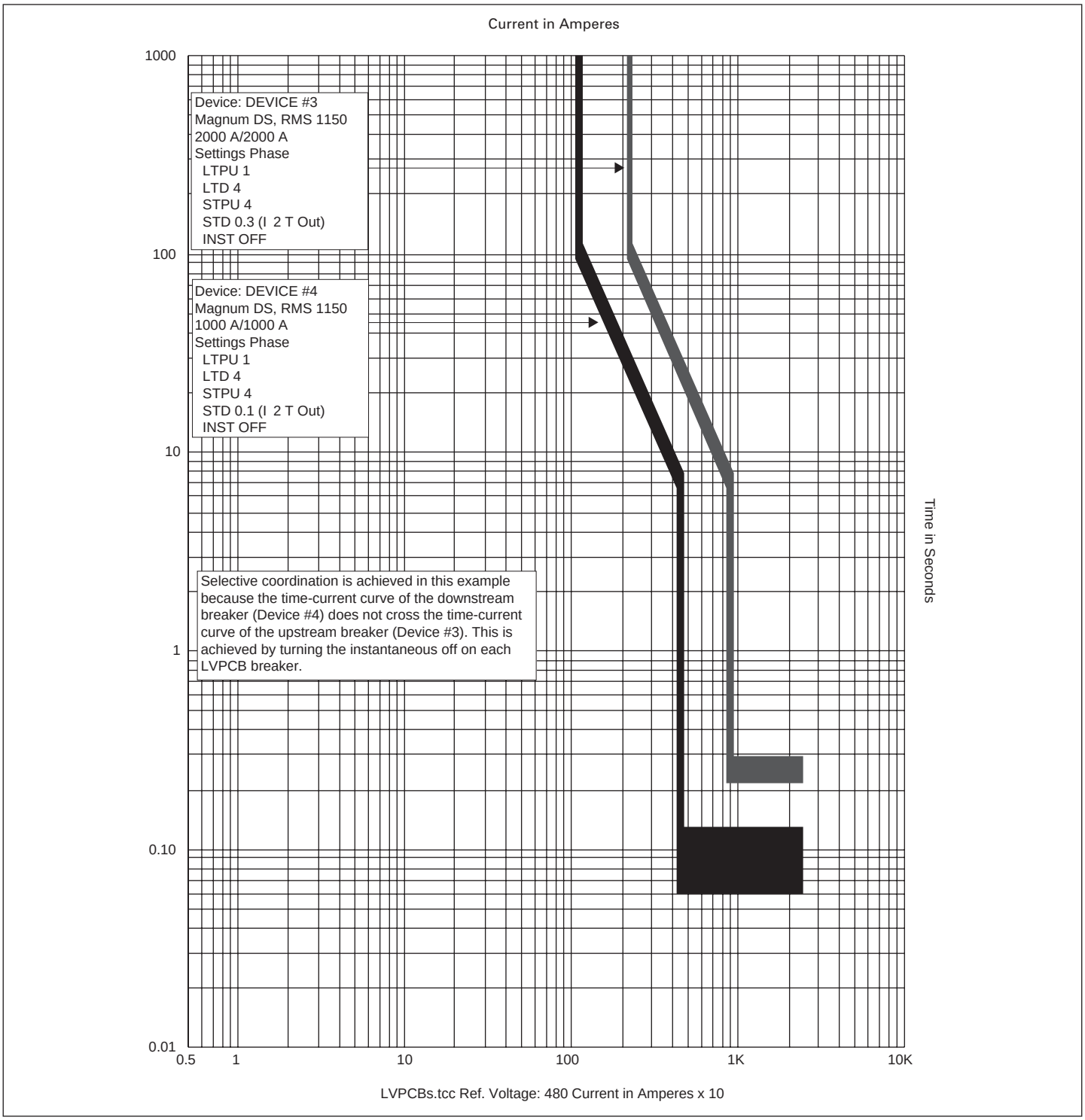

FIGURE 2.3. SELECTIVE COORDINATION UTILIZING LVPCBs

Eaton Corporation
Electrical Services & Systems
13205 SE 30th Street, Ste. 101
Bellevue, WA 98005
United States
1-866-ETN-CARE
Eaton.com

Aidan Graham, P.E., Power Systems Engineering Zone Manager and Tom Johnson, Application Engineer

Charles J. Nochumson, P.E., National Application Engineer Phoenix, AZ, USA

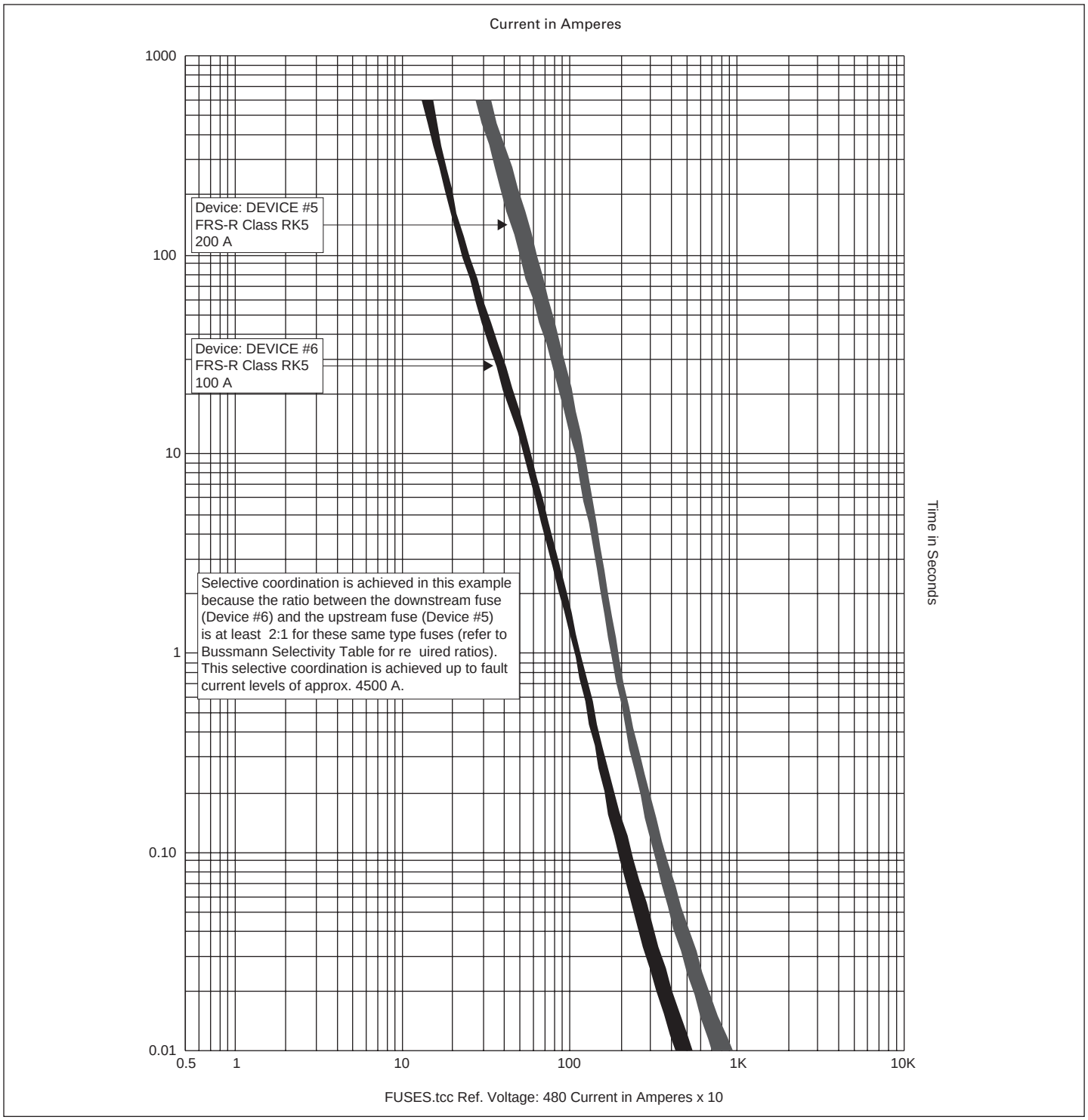

FIGURE 2.4. SELECTIVE COORDINATION UTILIZING FUSES

Eaton Corporation
Electrical Services & Systems
13205 SE 30th Street, Ste. 101
Bellevue, WA 98005
United States
1-866-ETN-CARE
Eaton.com

Aidan Graham, P.E., Power Systems Engineering Zone Manager and Tom Johnson, Application Engineer

Charles J. Nochumson, P.E., National Application Engineer Phoenix, AZ, USA

2.3 Selective Coordination Zones

In order to effectively design, supply and evaluate equipment to ensure the selective coordination requirements of the NEC are obtained, one must first consider where the equipment is located in the electrical distribution system. **Figure 2.5** below graphically illustrates the different "zones" of selective coordination that must be taken into consideration. A description of each zone follows **Figure 2.5**. These zones will be referred to throughout this document.

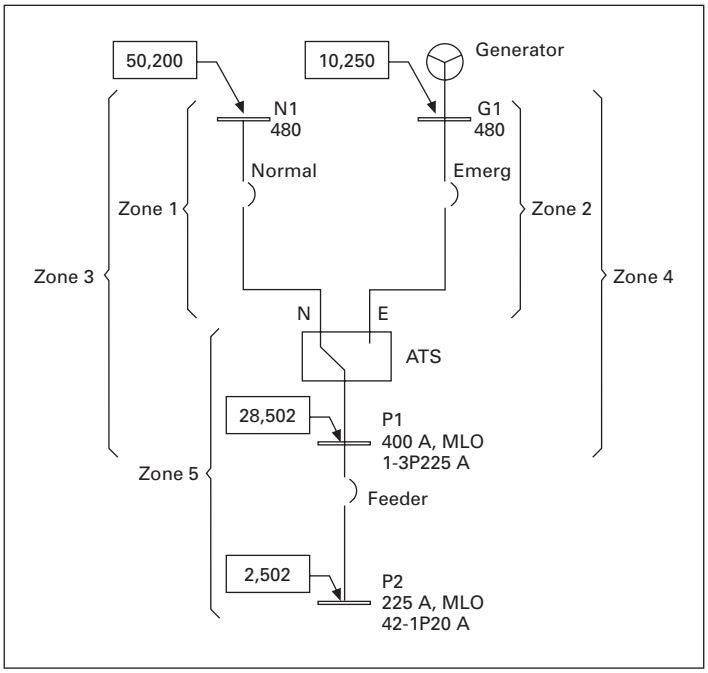

FIGURE 2.5. SELECTIVE COORDINATION ZONES

Zone 1 — Normal Source, Line Side of ATS — From Normal Power Source down to and including feeder breaker to ATS.

Zone 2 — Emergency Source, Line Side of ATS — From generator down to and including feeder breaker to ATS.

Zone 3 — Normal Source, Across ATS — Includes normal feeder breaker to ATS as well as first level of feeder breakers on secondary of ATS.

Zone 4 — Generator Source, Across ATS — Includes emergency feeder breaker to ATS as well as first level of feeder breakers on secondary of ATS.

Zone 5 — Load Side of ATS — All remaining feeders downstream.

Eaton Corporation
Electrical Services & Systems
13205 SE 30th Street, Ste. 101
Bellevue, WA 98005
United States
1-866-ETN-CARE
Eaton.com

Aidan Graham, P.E., Power Systems Engineering Zone Manager and Tom Johnson, Application Engineer
Charles J. Nochumson, P.E., National Application Engineer Phoenix, AZ, USA

2.4 Selective Coordination Myths and Facts

TABLE 2.1. TABLE OF COMMON SELECTIVE COORDINATION MYTHS AND FACTS

MYTH	FACT
Only fuses can be utilized to meet the selective coordination requirements of the NEC.	While fuses can be utilized to meet the selective coordination requirements by following the guidelines in published fuse ratio tables of a specific fuse manufacturer, circuit breakers can also be utilized to meet these requirements by using published circuit breaker selectivity tables. Note: After a fault condition, the electrical system must be restored to the level of protection and selective coordination as before the fault. To ensure ongoing selective coordination, fuses must be replaced after every fault, and they must be replaced by fuses from the same manufacturer, rating and type, and settings, as given in the original selective coordination study. For circuit breakers, following an overcurrent interruption, the condition of the breaker should be checked via thorough inspection per applicable guidelines from the manufacturer or other industry standard documents. If a circuit breaker needs to be replaced, its replacement type is identified via the label markings on its enclosure.
Only fused elevator modules can be utilized to feed elevators.	Fuses and circuit breakers can be utilized to feed elevators, so long as they meet the selective coordination requirements of the NEC.
If you apply fuses using a 2:1 ratio between the upstream and downstream fuses, you are guaranteed to meet the NEC requirements for selective coordination.	In order to guarantee selective coordination using fuses, you must follow the ratios in the manufacturer's published fuse ratio tables. Things to watch out for include: • Using multiple classes of fuses in the same system can lead to ratio requirements larger than 2:1. • Using fuses over 600 A can lead to ratio requirements larger than 2:1. • Using Class RK1 fuses to feed transformers can lead to problems with allowing for transformer inrush. • Fuse ratio tables are manufacturer specific, meaning you cannot guarantee selective coordination between fuses of different manufacturers.
All devices in series must selectively coordinate.	With regard to applications involving Emergency Systems, "People Movers," Health Care & Legally required systems, selective coordination shall not be required between protective devices of the same ampere rating in series. Examples would be a feeder protective device in a panelboard having a main protective device of the same ampere rating; or protective devices on the primary and secondary sides of a transformer. See the 2008 NEC exceptions 1 & 2 under Articles 700.27, 701.18 that would also apply to health care facilities.
The best method for increasing the reliability in an electrical system is to utilize selectively coordinated devices.	While reliability is improved with selective coordination, ensuring that power is maintained at critical loads starts with techniques such as making sure that a thorough system study has been conducted, and by having dual sources of power where available. This is seen in dual corded power supplies in data centers.
The requirements of selective coordination do not affect the arc flash incident energy.	The selective coordination requirements of the NEC may require design engineers to increase or eliminate the instantaneous setting of circuit breakers and change the type or increase rating of fuses. This will often lead to longer clearing times in the event of a fault, which will typically increase the arc flash incident energy.
Fuses limit arc flash incident energy more effectively than circuit breakers.	Arcing fault currents are very low in magnitude, more often than not falling in the short-time region of a molded case circuit breaker. For fault currents less than the current limiting point of a fuse (approximately 10 to 15 times the fuse ampere rating), a circuit breaker utilizing a short-time function is often significantly faster than a fuse of the same size. Typically, in the event of a lower value arc flash, the breaker will clear faster resulting in lower incident energy than would be experienced when protected by the fuse.

Eaton Corporation
Electrical Services & Systems
13205 SE 30th Street, Ste. 101
Bellevue, WA 98005
United States
1-866-ETN-CARE
Eaton.com

Aidan Graham, P.E., Power Systems Engineering Zone Manager and Tom Johnson, Application Engineer

Charles J. Nochumson, P.E., National Application Engineer Phoenix, AZ, USA

3.0 Designing Selectively Coordinated Systems

3.1 Introduction

The ability to meet the selective coordination requirements of the NEC is heavily dependent on the system guidelines as in the past. Consulting engineers must take into consideration the limitations of fuses and circuit breakers when designing electrical distribution systems where this is a requirement.

The information provided in this section is meant to serve as a guide for consulting engineers when designing systems where selective coordination per the NEC is required. Designing systems with this information in mind will help ensure that the financial impact of selective coordination is kept to a minimum.

3.2 Panels in Series

When designing a selectively coordinated system it is important to minimize the number of "series levels" of protective devices that need to be coordinated. In the example below, **Figure 3.1A** illustrates a 400 A panelboard feeding a 200 A panelboard, which in turn feeds a 175 A panelboard. **Figure 3.1B** shows the same equipment, only the 400 A panelboard now feeds both the 200 A panelboard and the 175 A panelboard. By removing one level, the need to selectively coordinate three levels of protective devices has been reduced to only two levels of protective devices.

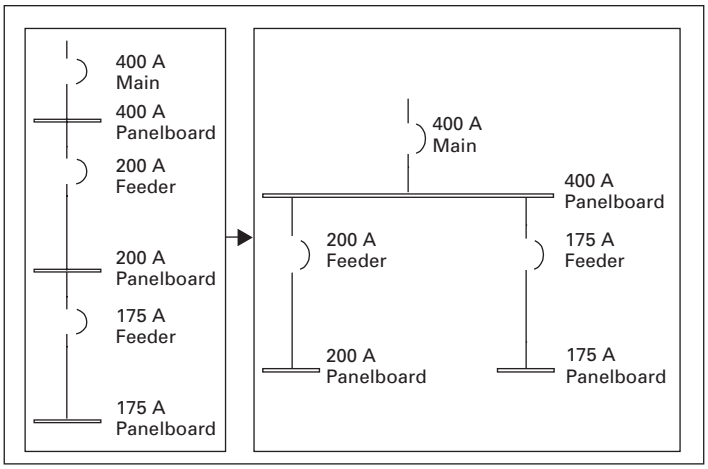

FIGURE 3.1.A THREE LEVELS **FIGURE 3.1.B. TWO LEVELS**

3.3 Breaker Frame Sizing

When designing a selectively coordinated system it is often advantageous to maximize the ratio of frame sizes between upstream and downstream circuit breakers. A larger ratio between circuit breakers will typically result in the circuit breaker combination selectively coordinating to a higher fault level, thus making it easier to achieve a selectively coordinated system.

3.4 Switchgear vs. Switchboards

One of the key differences between UL® listed switchgear and switchboards is the short-circuit withstand rating. Switchgears tested to UL 1558 [ANSI C37] have a 30-cycle withstand rating, while switchboards tested to UL 891 only have a 3-cycle withstand rating. This is an important difference with respect to selective coordination when utilizing low voltage power circuit breakers specified without instantaneous function or instantaneous override or with the ability to turn off the instantaneous function.

There are cases that may require the instantaneous function of a power circuit breaker to be disabled in order to achieve selective coordination with downstream devices. **Table 3.1** illustrates the instantaneous trip requirements of UL listed switchgear and switchboards.

TABLE 3.1. INSTANTANEOUS TRIP REQUIREMENTS OF SWITCHGEAR AND SWITCHBOARDS

EQUIPMENT TYPE	INSTANTANEOUS (3 CYCLE) CLEARING		
	MAIN	FEEDER	NOTES
Switchboard (Tested to UL 891)	On or Off	On	①
Switchgear (Tested to UL 1558)	On or Off	On or Off	②

① Disabling the instantaneous function of a switchboard main power circuit breaker is acceptable, as long as the feeder breakers still have an instantaneous function to clear a through-fault downstream of the switchboard within 3 cycles.

② Disabling the instantaneous function of a switchgear main or feeder power circuit breaker is acceptable, as long as the available fault current does not exceed the 30-cycle short-time rating of the circuit breaker or switchgear.

Eaton Corporation
Electrical Services & Systems
13205 SE 30th Street, Ste. 101
Bellevue, WA 98005
United States
1-866-ETN-CARE
Eaton.com

Aidan Graham, P.E., Power Systems Engineering Zone Manager and Tom Johnson, Application Engineer
Charles J. Nochumson, P.E., National Application Engineer Phoenix, AZ, USA

3.5 Avoiding 480/277 V Lighting Loads

When feeding lighting loads from 277 V circuits, it is difficult to use single- and double-pole circuit breakers since the fault current available is typically higher than that allowed for selective coordination of breakers per selective coordination tables. Also, it is difficult to design double-pole fused disconnect switches in panelboards.

Some fuse manufacturers have developed panelboards that can be used for single-pole circuits but the panelboards are typically limited to 225 A with a maximum feeder size of 60 A. It is better to utilize smaller kVA step-down transformers from the 480 V to 208Y/120 V to supply the lighting loads. This will allow for low fault current levels at the 208Y/120 V level to allow the secondary main breaker and branch breakers to selectively coordinate. Although transformer primary circuit breaker and secondary main circuit breaker need not selectively coordinate, care must be taken to select a primary circuit breaker with a trip large enough not to trip on transformer inrush current.

3.6 Automatic Transfer Switch Withstand Ratings

Automatic transfer switches (ATS) manufactured in accordance with UL 1008 have short-circuit withstand ratings of either 1.5 or 3 cycles. Therefore, the upstream protective device feeding the ATS must have an instantaneous element that clears a through-fault downstream of the ATS in less that the 1.5 or 3 cycle rating. However, several manufacturers, such as Eaton, have recently introduced the option for a 30-cycle withstand rating on their larger ampacity ATSs. **Table 3.2** below illustrates the instantaneous trip requirements of protective devices feeding UL listed ATSs.

TABLE 3.2. INSTANTANEOUS TRIP REQUIREMENTS OF COMMON AUTOMATIC TRANSFER SWITCHES

EQUIPMENT TYPE	REQUIRED FEEDER PROTECTIVE DEVICE INSTANTANEOUS CLEARING TIME	NOTES
ATS w/1.5 Cycle Withstand	≤ 1.5 cycles	①
ATS w/3 Cycle Withstand	≤ 3.0 cycles	②
ATS w/30 Cycle Withstand	≤ 30 cycles	③

① ATSs with a 1.5-cycle withstand rating are typically rated 400 A or less and used in applications with a maximum available short-circuit current of 10 kA.
② ATSs with a 3-cycle withstand rating are typically rated greater than 400 A and used in applications with a maximum available short-circuit current exceeds 10 kA.
③ ATSs with a 30-cycle withstand rating are typically used when there is a requirement for selective coordination. The instantaneous trip function of the upstream circuit breaker can be disabled, as long as the available short-circuit current is less than the 30-cycle withstand (short-time) rating of the ATS and circuit breaker.

Where the application requires selective coordination, it may be necessary to disable the instantaneous function of the power circuit breaker upstream of the ATS in order to achieve selective coordination with downstream devices. In this case, it is important to ensure that the ATS has a 30-cycle withstand rating high enough for the available fault current in the system.

3.7 Fused Elevator Modules vs. Circuit Breakers

As defined in NEC 620.62, the selective coordination requirements for elevator circuits state that "where more than one driving machine disconnecting means is supplied by a single feeder, the overcurrent protective devices in each disconnecting means shall be selectively coordinated with any other supply side overcurrent protective devices."

It is common practice to use fused elevator modules as the shunt-trip disconnect for elevators. However, fused elevator modules are not required by code and in many cases shunt-trip circuit breakers may be applied. The examples on the following pages illustrate the application of both equipment options.

Example #1 — The one-line diagram shown in **Figure 3.2** illustrates a typical application of a fused elevator module feeding two elevators.

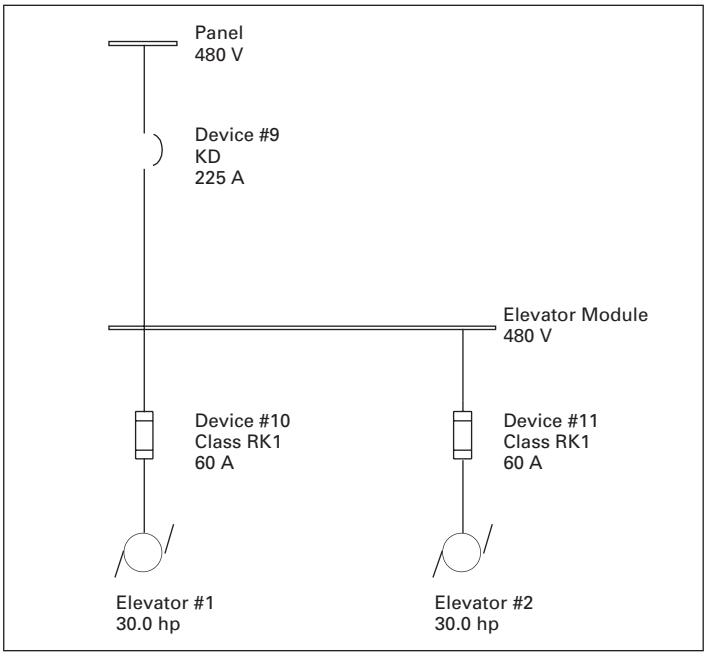

FIGURE 3.2. ONE-LINE DIAGRAM ILLUSTRATING APPLICATION OF A FUSED ELEVATOR MODULE

In the example one-line diagram above, the fused elevator disconnects (Device #10 and #11) selectively coordinate with the upstream feeder circuit breaker (Device #9) per the time-current curve shown in **Figure 3.3** as long as either the available fault current is below the instantaneous pickup setting of Device #9 or the peak let-through of Device #10 or Device #11 has been tested to show it is below the instantaneous pickup of Device #9 for all levels of fault current.

Eaton Corporation
Electrical Services & Systems
13205 SE 30th Street, Ste. 101
Bellevue, WA 98005
United States
1-866-ETN-CARE
Eaton.com

Aidan Graham, P.E., Power Systems Engineering Zone Manager and Tom Johnson, Application Engineer

Charles J. Nochumson, P.E., National Application Engineer Phoenix, AZ, USA

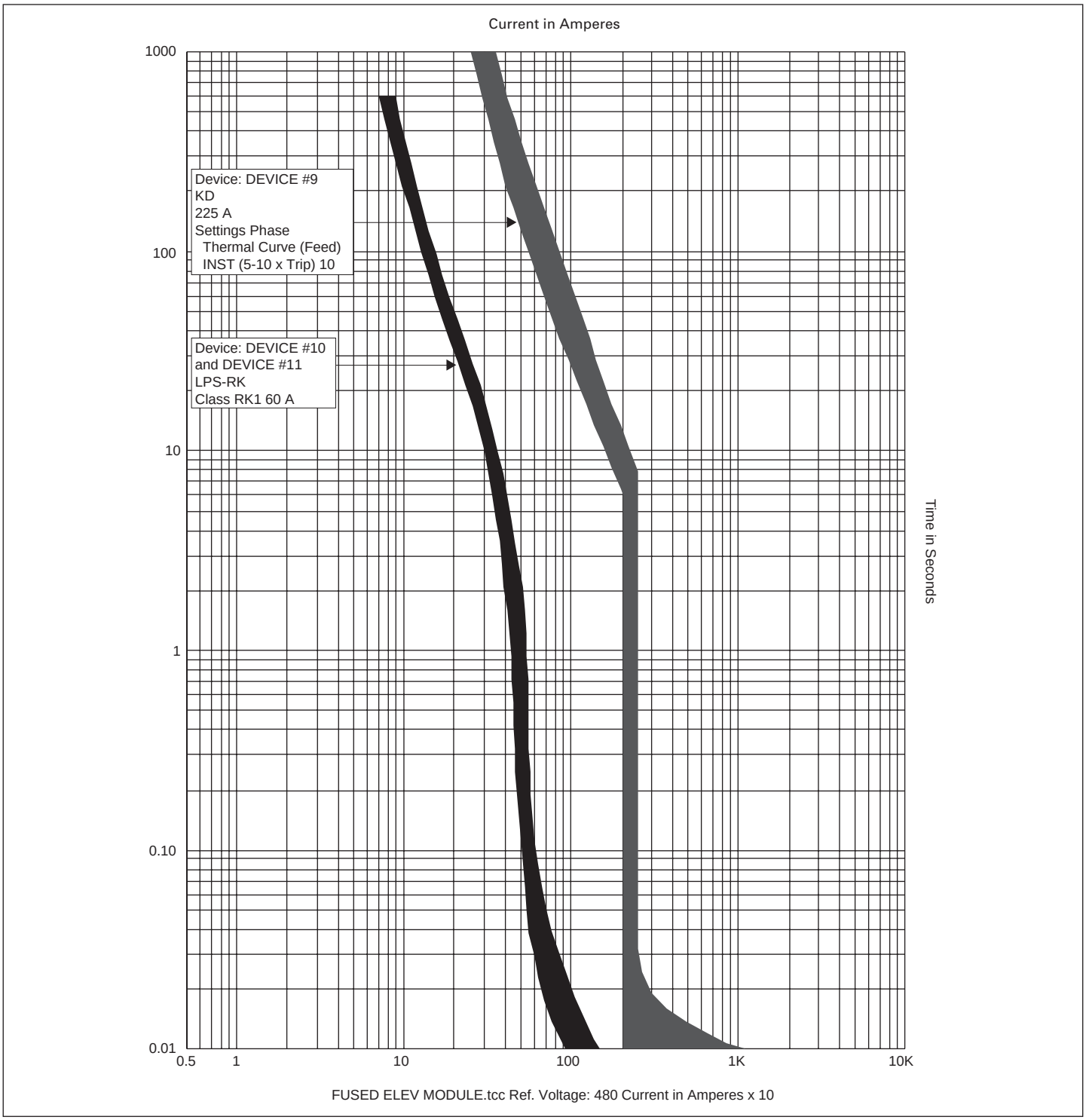

FIGURE 3.3. TIME-CURRENT CURVE ILLUSTRATING APPLICATION OF A FUSED ELEVATOR MODULE

Eaton Corporation
Electrical Services & Systems
13205 SE 30th Street, Ste. 101
Bellevue, WA 98005
United States
1-866-ETN-CARE
Eaton.com

Aidan Graham, P.E., Power Systems Engineering Zone Manager and Tom Johnson, Application Engineer

Charles J. Nochumson, P.E., National Application Engineer Phoenix, AZ, USA

Example #2 — The one-line diagram below illustrates a typical application of shunt-trip circuit breakers feeding two elevators.

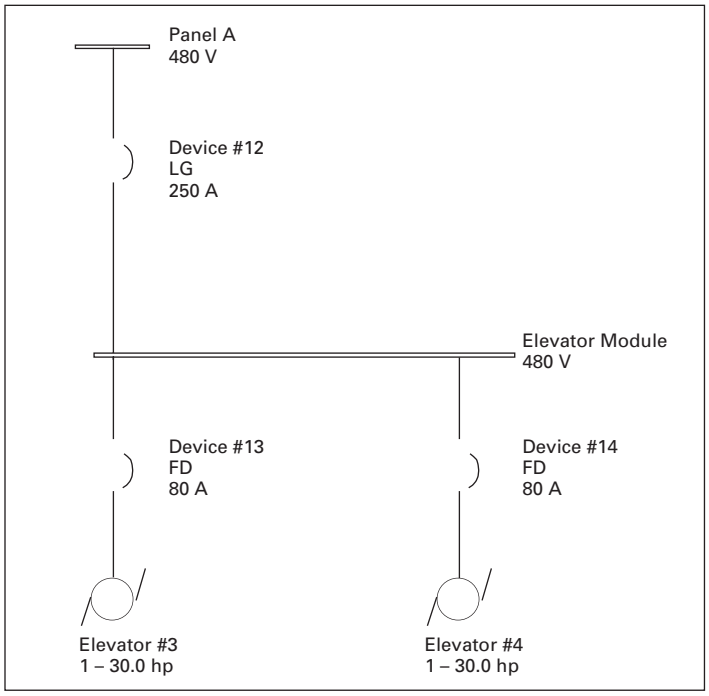

FIGURE 3.4. ONE-LINE DIAGRAM ILLUSTRATING APPLICATION OF SHUNT-TRIP CIRCUIT BREAKERS

In the example one-line diagram **Figure 3.4**, the circuit breaker elevator disconnects (Device #13 and #14) selectively coordinate with the upstream feeder circuit breaker (Device #12) per the time-current curve shown in **Figure 3.5** as long as either the available fault current is below the instantaneous pickup setting of Device #12 or that Device #12 and Device #13 or #14 have been tested to show they selectively coordinate for the available fault current.

Eaton Corporation
Electrical Services & Systems
13205 SE 30th Street, Ste. 101
Bellevue, WA 98005
United States
1-866-ETN-CARE
Eaton.com

Aidan Graham, P.E., Power Systems Engineering Zone Manager and Tom Johnson, Application Engineer

Charles J. Nochumson, P.E., National Application Engineer Phoenix, AZ, USA

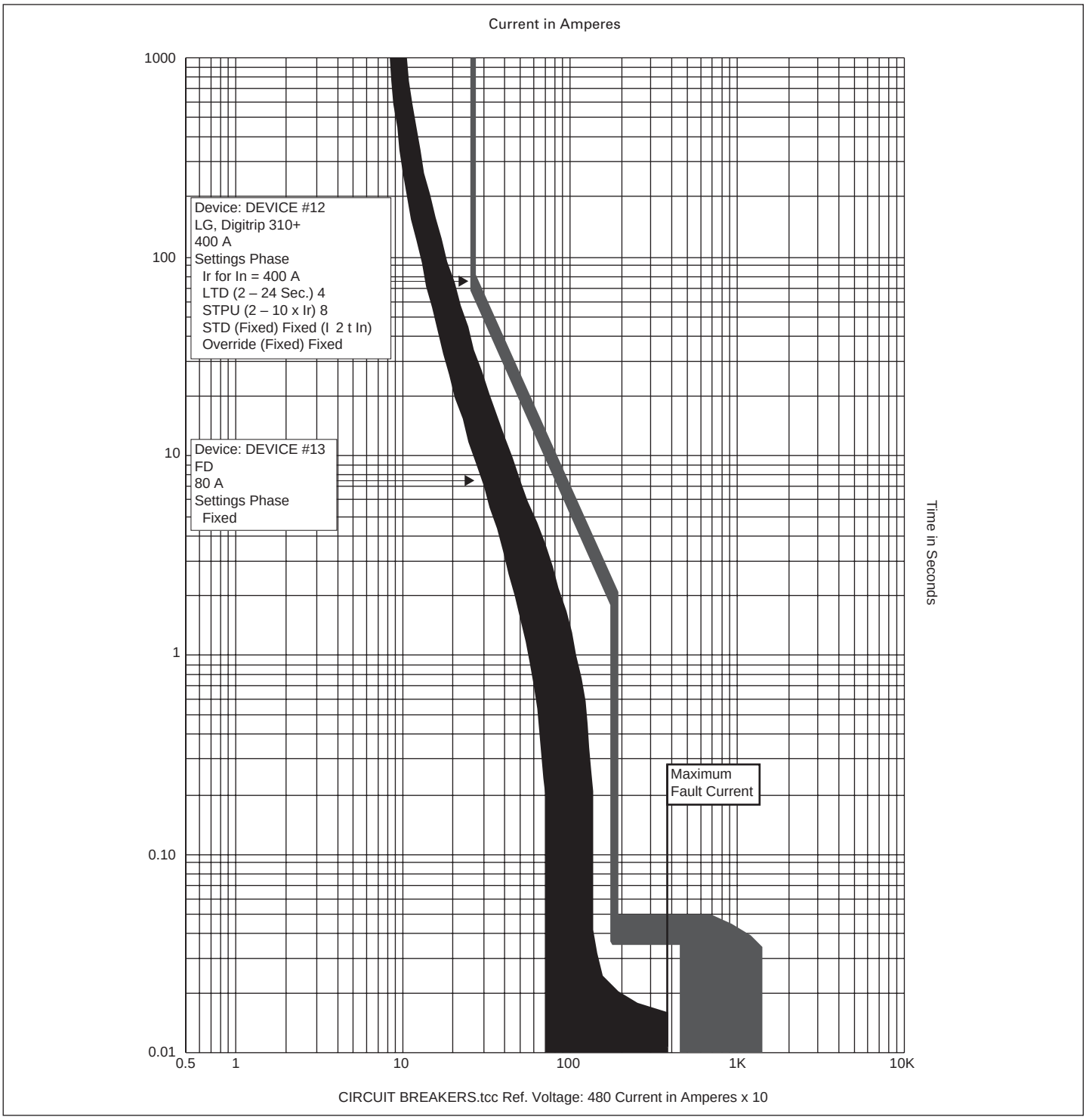

FIGURE 3.5. TIME-CURRENT CURVE ILLUSTRATING APPLICATION OF SHUNT-TRIP CIRCUIT BREAKERS

Eaton Corporation
Electrical Services & Systems
13205 SE 30th Street, Ste. 101
Bellevue, WA 98005
United States
1-866-ETN-CARE
Eaton.com

Aidan Graham, P.E., Power Systems Engineering Zone Manager and Tom Johnson, Application Engineer
Charles J. Nochumson, P.E., National Application Engineer Phoenix, AZ, USA

Additional note regarding selective coordination and elevators — when only one elevator is present in an electrical system or when multiple elevators are fed from separate sources, selective coordination is not required per NEC 620.62. Therefore, neither fused elevator modules nor selectively coordinated circuit breakers are required in this application. However, it should be noted that selective coordination may be required if the elevator is fed from an emergency or legally required standby source, as defined in NEC 700.27 and NEC 701.18.

3.8 Main Lug Only (MLO) and Through-Feed Lugs (TFL) Panels

As previously discussed, when designing a selectively coordinated system, it is important to minimize the number of "levels" of protective devices that need to be coordinated.

It is common practice to "daisy chain" panels; that is, feed one sub-panel from another sub-panel. In this case, Devices #4 and #5 must selectively coordinate with Devices #2 and #3 and all downstream devices must selectively coordinate with Device #1. See **Figure 3.6** below.

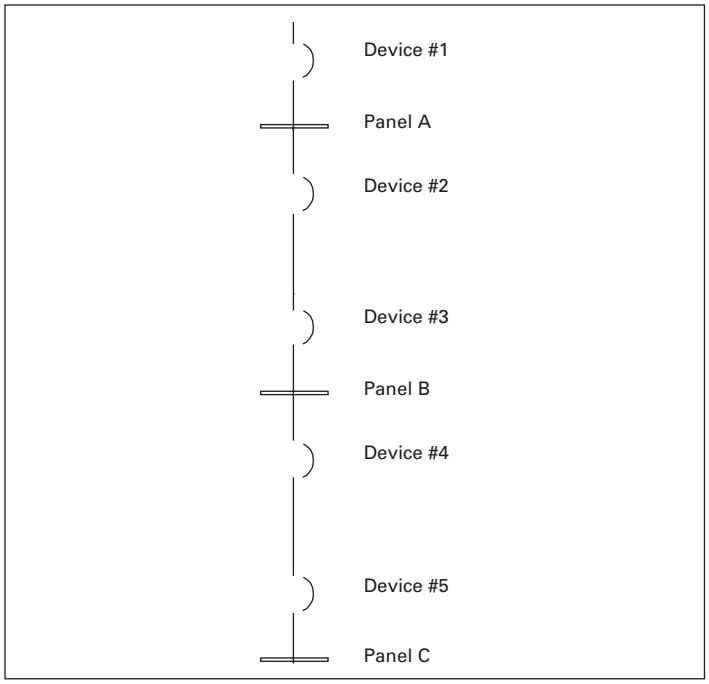

FIGURE 3.6. ONE-LINE DIAGRAM ILLUSTRATING USE OF MAIN AND FEEDER BREAKERS FOR EACH SUB-PANEL

In lieu of sub-feed circuit breakers, the use of Main Lug Only (MLO) panels with Through-Feed Lugs (TFL) reduces the selective coordination to one combination — the branch circuit devices in Panels A, B and C and the main device in Panel A. See **Figure 3.7**.

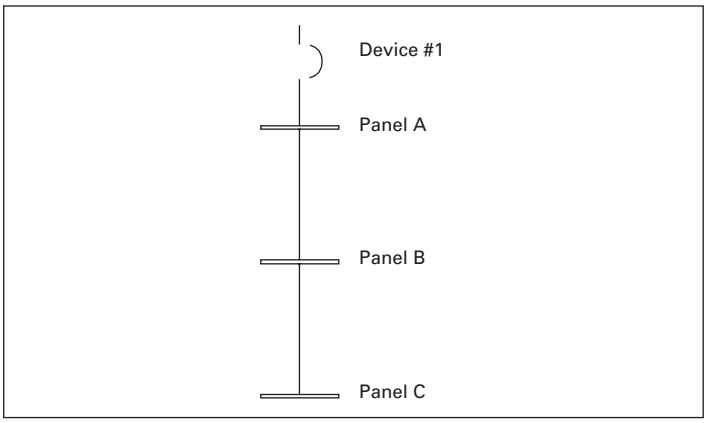

FIGURE 3.7. ONE-LINE DIAGRAM ILLUSTRATING USE OF MAIN LUG ONLY SUB-PANELS WITH THROUGH-FEED LUGS

It is important to remember that the cable size used for the feed-through panels (Panels B and C in this example) must be the same size as the cable used to feed panel A. In addition, the panelboards B and C must have a main lug and bus rating equal to Device #1. This is to ensure that all cables and bus are protected by the upstream breaker, Device #1.

3.9 Generator Breaker Selection

Most fuse and circuit breaker manufacturers have performed testing in an effort to develop comprehensive selective coordination tables. However, to date there has been no cross-manufacturer selective coordination testing performed. This can become an issue when the entire electrical distribution system is comprised of one manufacturer's equipment, but a different manufacturer provides the generator protective device. In order to avoid this, it is suggested that all protective devices be supplied from the same manufacturer, including the generator protective device(s).

3.10 Series Rated Systems

The premise behind a series rated combination is that both the upstream and the downstream circuit breakers interrupt in the event of a fault. Since the overall goal of a selectively coordinated system is to localize the overcurrent to only the affected equipment, series rated systems are not allowed where selective coordination is required. System designs must use fully rated equipment to meet selective coordination.

Eaton Corporation
Electrical Services & Systems
13205 SE 30th Street, Ste. 101
Bellevue, WA 98005
United States
1-866-ETN-CARE
Eaton.com

Aidan Graham, P.E., Power Systems Engineering Zone Manager and Tom Johnson, Application Engineer
Charles J. Nochumson, P.E., National Application Engineer Phoenix, AZ, USA

4.0 Supplying Selectively Coordinated Systems

4.1 Introduction

The ability to meet the selective coordination requirements of the NEC is heavily dependent on the equipment supplied. In most cases, systems can not be supplied with the same equipment requirements as in the past. Equipment manufacturers must take into consideration the limitations of fuses and circuit breakers when supplying electrical distribution systems where selective coordination is a requirement.

The information provided in this section is meant to serve as a guide for consulting engineers to ensure that enough information is available for equipment manufacturers to properly provide required equipment when selective coordination per the NEC or specifications is required. Designing systems with this information in mind will help reduce any financial impact associated with selective coordination requirements.

4.2 Steps When Supplying Selectively Coordinated Systems

Step 1 — Prior to designing a project, the consultant must understand the overall electrical system needs and objectives, especially in the area of selective coordination. Selective coordination requirements typically go hand-in-hand with generators and automatic transfer switches (ATS).

a. Drawings should state if an ATS is used for emergency, life safety, critical care, elevators, or legally required standby NEC or local code requirements. If the ATS is not used for these purposes, it should clearly be designated as "Optional Standby."
b. Drawing notes or specifications should clearly call out, when needed, the requirements to meet selective coordination per NEC 620.62, 700.27, 701.18 or 708.54 where required.
c. Specifications should also call out, where appropriate, the need for selective coordination in associated specification sections. This may include the short circuit/coordination study section and equipment specification sections for main switchgear/switchboards, panelboards, etc.

In many cases, if the drawings do not clearly call out what area of the system requires selective coordination, the bidding electrical equipment manufacturers, upon seeing a generator and ATS, may assume selective coordination is required, when in fact it may be intended as an optional standby application. If selective coordination is not carefully addressed in the initial design, it could lead to physically larger equipment requiring additional space, increased equipment cost and overall increased installation cost. Typically manufacturers today, including Eaton, are indicating in the terms and conditions of sale in their proposals that any changes required to meet NEC selective coordination requirements that were not shown in the initial design will be furnished but only at increased cost.

Step 2 — Develop a sound understanding of how the local jurisdiction interprets the NEC selective coordination code with respect to the "zones" discussed in **Section 2.3**.

Based on the Selective Coordination Zones presented in **Figure 2.5**, there are two scenarios that determine which fault current should be used to evaluate selective coordination. These two scenarios are detailed on the following page and the accompanying tables list the selective coordination zone and the corresponding maximum available fault current that should be used when evaluating equipment for selective coordination.

Scenario 1 — The authority having jurisdiction (AHJ) requires selective coordination up through emergency source only.

TABLE 4.1. AVAILABLE FAULT CURRENT USED IN SCENARIO 1

SELECTIVE COORDINATION ZONE	MAXIMUM AVAILABLE FAULT CURRENT USED
Zone 1	Not Applicable
Zone 2	Emergency Source
Zone 3	Not Applicable
Zone 4	Emergency Source
Zone 5	The Source with Highest Available Fault Current

Scenario 2 — The authority having jurisdiction (AHJ) requires selective coordination up through emergency source and the normal source.

TABLE 4.2. AVAILABLE FAULT CURRENT USED IN SCENARIO 2

SELECTIVE COORDINATION ZONE	MAXIMUM AVAILABLE FAULT CURRENT USED
Zone 1	Normal Source
Zone 2	Emergency Source
Zone 3	Normal Source
Zone 4	Emergency Source
Zone 5	The Source with Highest Available Fault Current

When designing equipment, one must review the local codes to see if selective coordination is required through the emergency source and the normal source. For example, while the State of Washington only requires selective coordination through the emergency source, the City of Bellevue in Washington State requires selective coordination through both the emergency and the normal source.

An example of how this can impact the circuit breakers needed to meet the selective coordination requirements is shown in **Table 4.1** and **Figure 4.1**.

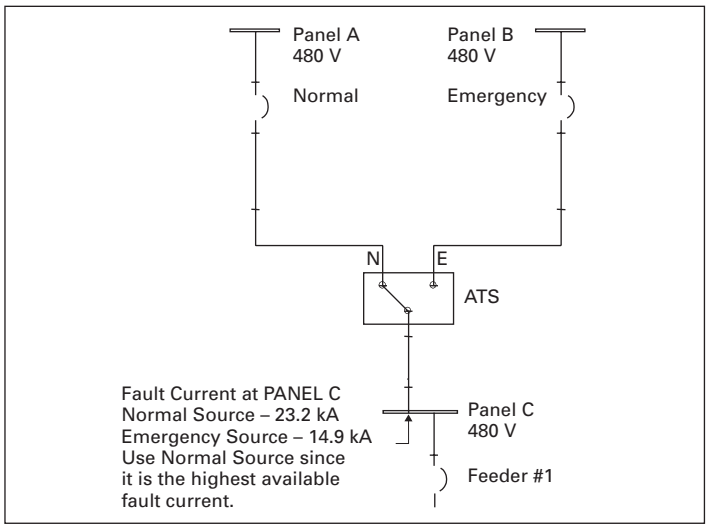

FIGURE 4.1. SELECTIVE COORDINATION THROUGH NORMAL AND EMERGENCY

Based on **Figure 4.1** above, **Table 4.3** illustrates the level of fault current that each device would need to coordinate to.

Eaton Corporation
Electrical Services & Systems
13205 SE 30th Street, Ste. 101
Bellevue, WA 98005
United States
1-866-ETN-CARE
Eaton.com

Aidan Graham, P.E., Power Systems Engineering Zone Manager and Tom Johnson, Application Engineer
Charles J. Nochumson, P.E., National Application Engineer Phoenix, AZ, USA

TABLE 4.3. CIRCUIT BREAKER SELECTIVE COORDINATION COMBINATIONS

SOURCE	UPSTREAM CIRCUIT BREAKER DESIGNATION/ FRAME	DOWNSTREAM CIRCUIT BREAKER DESIGNATION/ FRAME	AVAILABLE FAULT CURRENT (kA)
Normal	NORMAL FDR (R-Frame)	FEEDER #1 (L-Frame)	23.2
Emergency	EMERG FDR (N-Frame)	FEEDER #1 (L-Frame)	14.9

As shown above, the available fault current supplied from the generator is significantly lower than what is available from the normal source, in this example. Therefore, coordination of the feeder breaker with the emergency breaker can be achieved at much lower available fault current level.

In general, since the emergency source will typically have much lower available fault current than the normal source, smaller breaker frames may be used to achieve selective coordination. However, in some applications such as data centers or hospitals, the emergency source may have higher available fault current levels. In this example, the interrupting rating of the feeder breaker is higher than the available fault current of both the normal and the emergency sources, and as a result, it may be used to selectively coordinate with the protective devices of either source. If instead, the available fault current level from the normal source were higher than the interrupting current rating of the feeder breaker, and if selective coordination were also required with the protective device on the normal source, a larger feeder breaker with a higher interrupting rating would have to be used instead.

Step 3 — Determine available fault currents from normal and emergency sources.

Normal Source — These fault currents are typically shown on the one-line diagrams or on the panel schedules. Note that these most likely will be worst-case 3-phase bolted fault currents. A sample one-line diagram is shown below in **Figure 4.2** illustrating fault current "flags" that represent the worst-case fault currents available. This fault current is used in Step 2 Zone 5 of Scenario 1 and in Zones 1, 3 and 5 in Scenario 2.

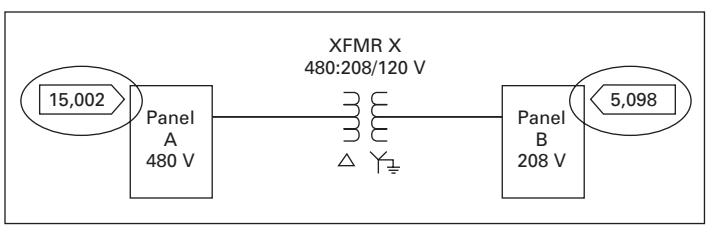

FIGURE 4.2. SAMPLE ONE-LINE SHOWING AVAILABLE FAULT CURRENT

Emergency Source — Most one-line diagrams will show fault current at the secondary of the generator or at the generator circuit breaker. Initially, one can assume this fault current throughout the emergency system as a basis for picking overcurrent protective devices. This fault current is used in Zones 2 and 4 in both Scenario 1 and Scenario 2. If cable lengths and sizes are known, point-to-point fault calculations can be made to calculate downstream emergency system fault currents. These calculated currents will be lower than what is shown at the generator terminals and may have an effect on the breaker selected.

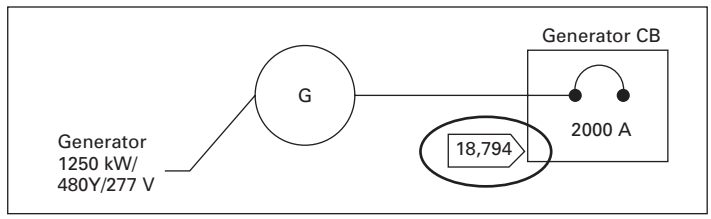

FIGURE 4.3. SAMPLE ONE-LINE SHOWING AVAILABLE GENERATOR FAULT CURRENT

If the generator fault current is not shown, use the formulas below as a general guideline to calculate an estimated 3-phase fault current at the generator terminals.

Equation 4.1

$$kVA = \frac{kW}{0.8}$$

Equation 4.2

$$FLA = \frac{kVA}{\left(\frac{v}{1000}\right)\sqrt{3}}$$

Equation 4.3

$$I_{sc} = \frac{FLA}{X_d''}$$

For the generator shown in **Figure 4.3** and an assumed subtransient reactance (X_d'') of 10%, the calculation for 3-phase fault current at the generator terminals would be as follows:

$$kVA = \frac{1250}{0.8} = 1562.5kVA$$

$$FLA = \frac{1562.5}{\left(\frac{480}{1000}\right)\sqrt{3}} = 1879.4A$$

$$I_{sc} = \frac{1879.4}{0.1} = 18{,}794AIC$$

(Typically, smaller generators at 480 or 208 volt have a fault current capability of 8 to 10 times their full load current rating.)

Eaton Corporation
Electrical Services & Systems
13205 SE 30th Street, Ste. 101
Bellevue, WA 98005
United States
1-866-ETN-CARE
Eaton.com

Aidan Graham, P.E., Power Systems Engineering Zone Manager and Tom Johnson, Application Engineer

Charles J. Nochumson, P.E., National Application Engineer Phoenix, AZ, USA

After estimating the generator approximate available fault current, a safety multiplying factor of 1.25 could be utilized to account for single line to ground fault currents and different generator subtransient reactance, in our example 18,794 x 1.25 = 23,492. This value is necessary when selecting circuit breakers for Zones 2 and 4 (as detailed in Step 2), using Eaton's selective coordination tables.

Step 4 — Pick protective devices using manufacturer's circuit breaker selectivity tables and fuse ratio tables such that each combination meets the selective coordination requirements.

Circuit Breakers — Start at the smallest device that is the furthest point downstream of the emergency system. Use the fault current available to you (from drawings or calculation) and the selective coordination breaker charts to determine the frame of the next upstream device. This is done for each upstream device until you reach the generator breaker or normal board breaker.

In the example below, **Figure 4.4** illustrates a small portion of an electrical system that requires selective coordination.

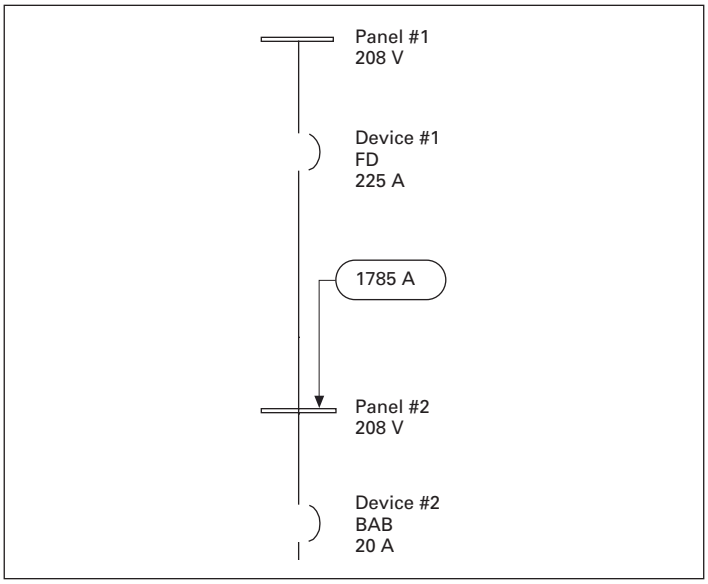

FIGURE 4.4. CIRCUIT BREAKER EXAMPLE ONE-LINE

Eaton document *Selective Coordination Industry Application* (IA01200002E) shows the combinations of molded case circuit breakers that selectively coordinate. Table 3 (MCCB – MCCB Combinations) of this application document shows these combinations, and an example of this Table 3 is shown in **Figure 4.5**. From Table 3 in **Figure 4.5**, it is seen that for the 20 ampere BAB breaker of **Figure 4.4**, the maximum available fault current that this 20 ampere BAB will selectively coordinate with is 2.2 kA (2200 A).

From the one-line diagram of **Figure 4.4**, there is 1785 A available at Panel # 2. This available fault current is less than the 2200 A maximum of the 20 ampere BAB breaker. Therefore, the FD and BAB circuit breakers will selectively coordinate.

TABLE 3. MCCB — MCCB COORDINATION (ALL VALUE

Lead Side Breaker	Breaker Family Type Trip Unit Minimum Trip Maximum Trip	Line Side Breaker EG T/M 125 A 125 A	F T/M 100 A 100 A	F T/M 150 A 150 A	F T/M 225 A 225 A
BR, BAB, HQP & QC (120 Vac for 1-Pole, 120/240 Vac for 2-Pol					
15		1.2	1.0	1.5	2.2
20		1.2	1.0	1.5	2.2
30		1.2	1.0	1.5	2.2
40		0.8	1.0	1.5	2.2
50		0.8	—	1.5	2.2
60		0.8	—	1.5	2.2
70		—	—	1.5	2.2
80		—	—	—	2.2
90		—	—	—	2.2
100		—	—	—	1.8
125		—	—	—	—
150		—	—	—	—

FIGURE 4.5. EXAMPLE UTILIZING CIRCUIT BREAKER TABLES

Fuses — Start at the smallest device that is the furthest point downstream in the emergency system. Based on the sizes and types of fuses selected, use the fuse ratio tables to determine if the necessary ratio is met. It is suggested that RK5 fuses be selected as a starting point, since they are less expensive than RK1, and the ratio between upstream and downstream devices is relatively low if RK5 fuses are used for both devices. Note RK1 fuses have better current limiting characteristics when in the current limiting mode at currents above approximately 10 – 15 times its ratings.

Proceed with this method for each upstream device until you reach the fuse on the normal or emergency size of the board. If the normal and/or emergency device feeding the ATS is a circuit breaker, you must use a time-current curve and/or manufacturer test data to illustrate selective coordination between these devices and the largest fuse downstream. It should be noted that for all protective device combinations that have not been tested (such as the combination of a fuse and circuit breaker), the manufacturers' published time-current curves will illustrate the time levels for which selective coordination may be achieved.

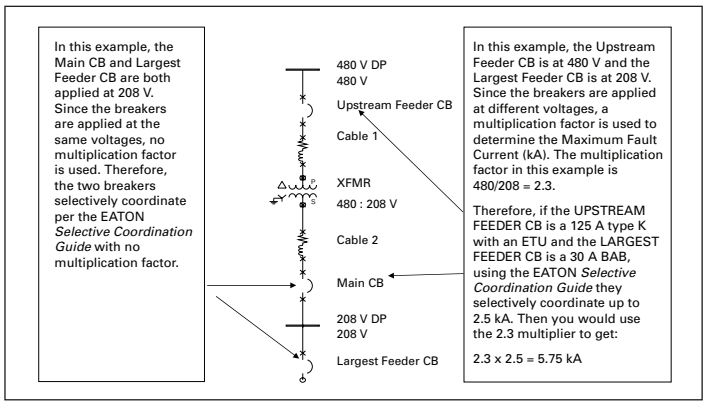

FIGURE 4.6. USING EATON'S SELECTIVE COORDINATION BREAKER TABLES ACROSS TRANSFORMERS

Eaton Corporation
Electrical Services & Systems
13205 SE 30th Street, Ste. 101
Bellevue, WA 98005
United States
1-866-ETN-CARE
Eaton.com

Aidan Graham, P.E., Power Systems Engineering Zone Manager and Tom Johnson, Application Engineer

Charles J. Nochumson, P.E., National Application Engineer Phoenix, AZ, USA

In the example below, **Figure 4.7** illustrates a small portion of an electrical system that requires selective coordination.

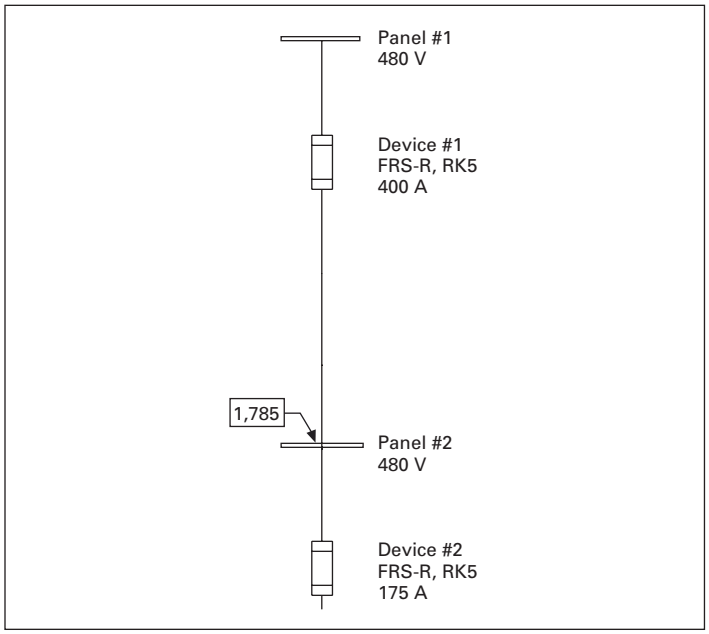

FIGURE 4.7. FUSIBLE SWITCH EXAMPLE ONE-LINE

Using the Bussmann® Fuse Ratio Table shown in **Figure 4.8**, it is determined that the required ratio is ≥ 2:1. Since 400 / 175 ≥ 2, the combination will selectively coordinate.

* Selectivity Ratio Guide (Line-Side to Load-Side) for Blackout Prevention

Circuit		Load-Side Fuse						
Current Rating				601-6000A	601-4000A	0-600A		
Type				Time-Delay	Time-Delay	Dual-Element Time-Delay		
		Trade Name		LOW-PEAK® YELLOW	LIMITRON	LOW-PEAK® YELLOW		FUSETRON®
		Class		(L)	(L)	(RK1)	(J)	(RK5)
		Buss® Symbol		KRP-C_SP	KLU	LPN-RK_SP LPS-RK_SP	LPJ-SP	FRN-R FRS-R
601 to 6000A	Time-Delay	LOW-PEAK® YELLOW (L)	KRP-C_SP	2:1	2.5:1	2:1	2:1	4:1
601 to 4000A	Time-Delay	LIMITRON (L)	KLU	2:1	2:1	2:1	2:1	4:1
0 to 600A	Dual-Element	LOW-PEAK® YELLOW (RK1)	LPN-RK_SP	–	–	2:1	2:1	8:1
			LPS-RK_SP	–	–	2:1	2:1	8:1
			LPJ-SP	–	–	1.5:1	1.5:1	2:1
		FUSETRON® (RK5)	FRN-R FRS-R	–	–	1.5:1	1.5:1	2:1
601 to 6000A	Fast	LIMITRON (L)	KTU	2:1	2.5:1	2:1	2:1	6:1
0 to	Fast	LIMITRON	KTN-R			2:1	2:1	8:1

Line-Side Fuse

FIGURE 4.8. EXAMPLE UTILIZING FUSIBLE TABLES

Note: Table courtesy of Bussmann.

4.3 Example #1 — Selective Coordination Using Circuit Breakers

The following is a detailed example of how to choose selectively coordinated circuit breakers using the steps presented in Section 4.2. For the purposes of this example, the following is a description of what was determined by the design engineer.

The local authority having jurisdiction requires that selective coordination be provided via normal and emergency sources. **Figure 4.9** is an example of the one-line that is required to selectively coordinate. The following pages show step-by-step instructions on how to pick overcurrent protective devices to selectively coordinate.

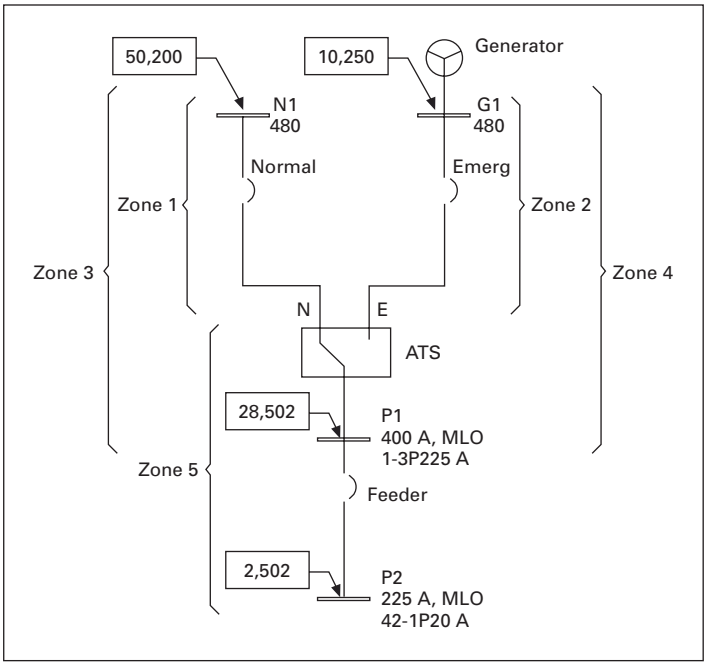

FIGURE 4.9. SAMPLE SYSTEM ONE-LINE

Step 1 — Prior to designing a project, the design engineer must understand the electrical system design and what is required to be selectively coordinated.

For this example, the local authority having jurisdiction requires selective coordination through the normal and the emergency sources. All Zones of Selective Coordination need to be reviewed.

Step 2 — Develop a sound understanding of how the local jurisdiction interprets the NEC selective coordination code with respect to the "zones" discussed in Section 2.3.

Based on our findings in Step 1, we use the Zones of Selective Coordination Table for normal and emergency fault currents to decide what fault currents to use for each zone.

Eaton Corporation
Electrical Services & Systems
13205 SE 30th Street, Ste. 101
Bellevue, WA 98005
United States
1-866-ETN-CARE
Eaton.com

Aidan Graham, P.E., Power Systems Engineering Zone Manager and Tom Johnson, Application Engineer

Charles J. Nochumson, P.E., National Application Engineer Phoenix, AZ, USA

TABLE 4.4. ZONES OF SELECTIVE COORDINATION

SELECTIVE COORDINATION ZONE	MAXIMUM AVAILABLE FAULT CURRENT USED
Zone 1	Normal Source
Zone 2	Emergency Source
Zone 3	Normal Source
Zone 4	Emergency Source
Zone 5	The Source with the Highest Available Fault Current

Step 3 — Determine available fault currents from normal and emergency sources.

Based on the one-lines shown in **Figure 4.9**, we see that we have the following fault current values:

Location N1: 50,200 A

Location G1: 10,250 A

Location P1: 28,510 A

Location P2: 2502 A

Step 4 — Pick protective devices using manufacturer's circuit breaker selectivity tables such that each combination meets the selective coordination requirements.

In the example above, we will start with the single-pole 20 A breakers shown in panel P2. For a fault current of 2502 A, using Table 3 of the *Selective Coordination Industry Application* (IA01200002E) one would select an Eaton GHB lighting breaker. Please note that this is Zone 5 that requires utility fault currents (which is the highest available source) to be used at all times as seen in **Table 4.4**.

Panel P2 is fed from a 3-pole 225 A breaker in panel P1. From page 6 of the *Selective Coordination Industry Application* (IA01200002E), we see that a GHB 20 A breaker selectively coordinates to a 225 A F-breaker with electronic trip unit up to 2.8 kAIC. Since 2.8 kAIC is greater than the 2502 calculated, these two breakers will selectively coordinate. The feeder breaker in panel P2 will be a FD3225 with Digitrip 310+ electronic trip unit.

TABLE 4.5. EXCERPT FROM EATON'S SELECTIVE COORDINATION GUIDE

DOWNSTREAM BRANCH CIRCUIT BREAKER	UPSTREAM MAIN CIRCUIT BREAKER
	F
	ETU
	225
	225
GHB/GHC Family	
20	**2.8** ①
30	2.8
50	2.3
70	2.3
100	1.8

① Limit of coordination for FD3225 with electronic trip unit to GHB single-pole 20 A.

We now need to look at the upstream devices from Panel P1 for both the normal and emergency sources.

Normal Source Coordination: Panel P1 is fed from a 400 A breaker in N1. Panel P1 shows an available normal fault current of 28,510 A. To coordinate to the normal breaker shown in switchboard N1, we would use a 1200 A N-Frame breaker with electronic trip unit and 400 A trip sensor rating. From page 7 of Eaton's *Selective Coordination Guide*, the 225 ampere F breaker coordinates to the 400 ampere N breaker up to 30 kAIC.

TABLE 4.6. EXCERPT FROM EATON'S SELECTIVE COORDINATION GUIDE

DOWNSTREAM BRANCH CIRCUIT BREAKER	UPSTREAM MAIN CIRCUIT BREAKER
	N
	ETU
	800 A
	400 A
F Family	
15	50
40	42
100	35
225	**30** ①

① Limit of coordination for 400 A N-Frame with electronic trip unit to 225 A F-Frame.

In this case, the 400 A breaker in N1 will be an 800 A frame ND breaker with 400 A trip sensor rating.

Note: If only emergency source coordination is required, the feeder breaker in panel N1 may be a KD 400 A frame breaker rather than the 800 A ND frame breaker required.

Emergency Source Coordination: We are now reviewing panel P1 as it is connected to the emergency source. Since we do not have a calculated emergency fault current shown on the one-lines for panel P1, we can assume that panel P1 has the same fault current as G1 while on generator power. In this example, 10,250 AIC. From Table 3 of the *Selective Coordination Industry Application* (IA01200002E), we may now use a LG-Frame breaker with electronic trip unit. This breaker coordinates with the 225 A F-Frame up to 12 kAIC which is a higher value than the 10,250 AIC at the generator breaker.

Eaton Corporation
Electrical Services & Systems
13205 SE 30th Street, Ste. 101
Bellevue, WA 98005
United States
1-866-ETN-CARE
Eaton.com

Aidan Graham, P.E., Power Systems Engineering Zone Manager and Tom Johnson, Application Engineer
Charles J. Nochumson, P.E., National Application Engineer Phoenix, AZ, USA

TABLE 4.7. EXCERPT FROM EATON'S SELECTIVE COORDINATION GUIDE

DOWNSTREAM BRANCH CIRCUIT BREAKER	UPSTREAM MAIN CIRCUIT BREAKER
	LG (LHH)
	T/M
	400 A
F Family	
15	22
40	16
100	14
225	**12** ①

① Limit of coordination for 400 A LG (LHH)-Frame with thermal magnetic High Withstand trip unit to 225 A F-Frame.

In this case, the 400 A breaker in G1 will be a 400 A LG (LHH)-Frame circuit breaker.

4.4 Example #2 — Selective Coordination Using Fusible Switches

The following is a detailed example of how to choose selectively coordinated fused switches using the steps presented in Section 4.2. For the purposes of this example, the following is a description of what was provided by the short-circuit study.

For the same one-line as in Example #1, we will now assume we are going to use fusible switches for coordination. In this case, the local AHJ requires coordination through the emergency source only.

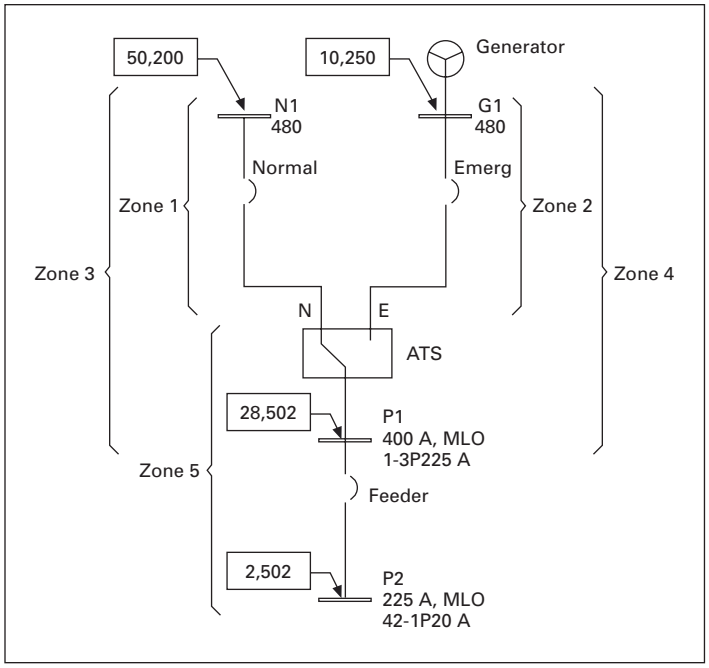

FIGURE 4.10. SAMPLE SYSTEM ONE-LINE

Step 1 — Prior to designing a project, the consultant must understand the electrical system design and what is required to be selectively coordinated.

For this example, we are providing selective coordination through the emergency system only.

Step 2 — Develop a sound understanding of how the local jurisdiction interprets the NEC selective coordination code with respect to the "zones" discussed in Section 2.3.

We now review the Zones of Selective Coordination Tables for emergency only selective coordination.

TABLE 4.8. ZONES OF SELECTIVE COORDINATION

SELECTIVE COORDINATION ZONE	MAXIMUM AVAILABLE FAULT CURRENT USED
Zone 1	Not Applicable
Zone 2	Emergency Source
Zone 3	Not Applicable
Zone 4	Emergency Source
Zone 5	The Source with the Highest Available Fault Current

Step 3 — Determine available fault currents from normal and emergency sources.

Based on the one-lines shown in **Figure 4.9**, we see that we have the following fault current values:

Location N1: 50,200 A

Location G1: 10,250 A

Location P1: 28,502 A

Location P2: 2502 A

Step 4 — Pick protective devices using manufacturer's fuse ratio tables such that each combination meets the selective coordination requirements.

Starting at panel P2, we select a J-class fuse at 20 A.

From the fuse manufacturer's guide, we see that providing a 225 A fuse in panel P1 is greater than their published 2:1 ratio and thus selective coordination is ensured.

We now will use the fuse tables to provide coordination from G1 to P1. From the fuse tables, we see a 2:1 ratio is required. For J-class fuses, this means that the feeder in panel G1 is required to change from 400 A to 500 A to achieve coordination. Note that the fusible switch, ATS and conductor sizes must be increased to be compatible with the fuse higher overcurrent rating of the fuse.

Eaton Corporation
Electrical Services & Systems
13205 SE 30th Street, Ste. 101
Bellevue, WA 98005
United States
1-866-ETN-CARE
Eaton.com

Aidan Graham, P.E., Power Systems Engineering Zone Manager and Tom Johnson, Application Engineer
Charles J. Nochumson, P.E., National Application Engineer Phoenix, AZ, USA

4.5 Additional Concerns When Supplying Equipment

1. Keep in mind the equipment size — Due to oversizing breaker frames and/or selective fusible devices for selective coordination, a larger footprint may be required for your electrical distribution equipment.

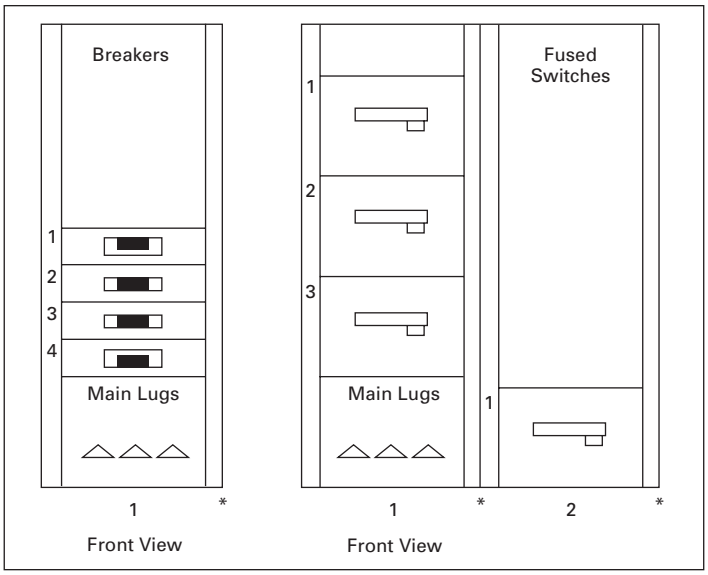

FIGURE 4.11. 2000 A SWITCHBOARD WITH (4) 600 A FEEDERS

2. Inspectors/AHJ interpretation — Local jurisdiction may have a different interpretation of the NEC selective coordination code. Be sure you have a clear understanding of what is required.
3. Generator breaker — Generator manufacturers typically supply their generators with circuit breakers on the output. To ensure selective coordination, the generator manufacturer may be required to provide a breaker to match the other breakers in the system so that the published selective coordination guide may be used.
4. Deadlines for "proving" selective coordination — Depending on the AHJ, selective coordination proof may be required prior to giving a permit.
5. Study scope of work — Be sure to include associated cost increases for selective coordination in the budget estimate. Selective coordination studies are more difficult and take more time than a standard study. Be sure your power systems engineer understands that selective coordination is required when you ask for a short circuit and coordination preliminary study.
6. Typical final study data required
   a. Accurate bill of material for all power distribution equipment.
   b. Utility fault current, utility transformer and upstream utility overcurrent device.
   c. All cable lengths, sizes and conduit types.
   d. Generator manufacturer data, including output circuit breaker.
   e. All motor loads.
7. Selecting Circuit Breaker Trip Ratings

   There are a few things to keep in mind when utilizing Table 3 in Eaton's *Selective Coordination Industry Application* (IA01200002E).

   a. Referring to **Figure 4.12** below, the top row "Breaker Family" indicates a breaker frame family. For example, an "F" includes all breakers types in that family, i.e., ED, FD, HFD, FDB, etc. Every selected circuit breaker type must have an interrupting capacity equal to or greater than the available fault current at its point of application.
   b. The second row "Type Trip Unit" indicates the trip unit type. ETU stands for electronic trip unit while T/M stands for thermal magnetic trip units.
   c. The third row down "Minimum Trip" indicates the circuit breaker's continuous ampere minimum rating while the fourth row down "Maximum Trip" indicates the circuit breaker's maximum continuous ampere rating. This is an important distinction that cannot be overlooked. Keep in mind that for some of Eaton's breakers, such as OPTIM trip units, one can get lower continuous ampere and trip ratings with higher rated frames. For example, with an OPTIM 1050 trip unit, one can use an 800 A Frame ND breaker with 400 A rating plug. The OPTIM 1050 trip unit then allows for long delay pickup down to 0.4, allowing for a 160 A trip on this circuit breaker.

TABLE 3. MCCB — MCCB COORDINATION (ALL VALUES IN (KA) IN RI

		Line Side Breaker					
	Breaker Family	EG	F	F	F	F	F
Lead	Type Trip Unit	T/M	T/M	T/M	T/M	ETU	ETU
Side	Minimum Trip	125 A	100 A	150 A	225 A	15 A	60 A
Breaker	Maximum Trip	125 A	100 A	150 A	225 A	80 A	160 A
BR, BAB, HQP & QC (120 Vac for 1-Pole, 120/240 Vac for 2-Pole and 240 Vac for							
15		1.2	1.0	1.5	2.2	0.6	1.2
20		1.2	1.0	1.5	2.2	0.6	1.2
30		1.2	1.0	1.5	2.2	0.6	1.2
40		0.8	1.0	1.5	2.2	0.6	1.2
50		0.8	—	1.5	2.2	—	1.2
60		0.8	—	1.5	2.2	—	1.2
70		—	—	1.5	2.2	—	1.2
80		—	—	—	2.2	—	—
90		—	—	—	2.2	—	—
100		—	—	—	1.8	—	—
125		—	—	—	—	—	—
150		—	—	—	—	—	—

FIGURE 4.12. SELECTIVE COORDINATION TABLE HEADINGS

   d. Transformer tables — Eaton provides a quick reference document that shows main and feeder breaker combinations on the secondary of Eaton's dry-type distribution transformers. Reference Appendix B.
   e. The Table 3 of the *Selective Coordination Industry Application* (IA01200002E) shows the combinations of molded case circuit breakers that selectively coordinate, typically with currents at the high short circuit levels of the protective devices. As a result, one should also check for selective coordination at lower currents level on each of the applicable long time, short time and ground fault portions of the time current curves of the protective devices.

Eaton Corporation
Electrical Services & Systems
13205 SE 30th Street, Ste. 101
Bellevue, WA 98005
United States
1-866-ETN-CARE
Eaton.com

Aidan Graham, P.E., Power Systems Engineering Zone Manager and Tom Johnson, Application Engineer
Charles J. Nochumson, P.E., National Application Engineer Phoenix, AZ, USA

8. Changing breaker trip ratings

One of the goals in choosing breakers that will selectively coordinate is to be able to easily select ones per Table 3 of the *Selective Coordination Industry Application* (IA01200002E) that will satisfy the trip ratings and frame sizes as specified by the engineer. At times, changes will be required to the one-line diagrams to achieve selective coordination. To make these changes, a full understanding of the applicable NEC articles below may be required. Applicable requirements are summarized below.

Cable Considerations:

- Power cables require overload and short-circuit protection in order to meet the requirements stated in NEC-2002, Article 240 and IEEE Standard 242-1986. Summarizes these limitations to the pickup settings of the protective devices designated for cable protection. NEC further requires that "The ampacity of a cable be determined by Article 310.15. Cable de-rating based upon ambient temperature and the number of current-carrying conductors in a raceway must also be applied. Even though de-rating factors can be based on the cable insulation rating, the selection of allowed cable ampacity must be determined utilizing the 75ºC column in the table due to terminal/lug limitations. For example, a 1/0 conductor having 90ºC insulation has a 90ºC ampacity rating of 170 amperes. If utilized in a 40ºC ambient, the 90ºC insulation derating factor is 0.91. Thus, by derating factors, the cable ampacity would be 0.91 x 170 A = 154.7. However, since a 1/0 conductor by 75ºC column is only rated 150 A, this would be the maximum ampacity to which the conductor could be loaded. If the ambient were 50ºC then the 90ºC insulation derating factor is 0.82 and the cable based on insulation would be 170 A x 0.82 = 130.4 amperes. This would determine the maximum ampacity of the conductor and would be okay based on the 1/0 conductor 75ºC column rating.

Current Carrying Capacities of Copper and Aluminum and Copper-Clad Aluminum Conductors From National Electrical Code (NEC), 2005 Edition (NFPA70-2005)

Table 1.5-24. Allowable Ampacities of Insulated Conductors Rated 0 – 2000 Volts, 60°C to 90°C (140°F to 194°F). Not more than three current-carrying conductors in raceway, cable or earth (directly buried), based on ambient temperature of 30°C (86°F)

Size	Temperature Rating of Conductor (See Table 310.16)						Size
AWG or kcmil	60°C (140°F)	75°C (167°F)	90°C (194°F)	60°C (140°F)	75°C (167°F)	90°C (194°F)	AWG or kcmil
	Types			Types			
	TW, UF	RHW, THHW, THW, THWN, XHHW, USE, ZW	TBS, SA, SIS, FEP, FEPB, MI, RHH, RHW-2, THHN, THHW, THW-2, THWN-2, USE-2, XHH, XHHW, XHHW-2, ZW-2	TW, UF	RHW, THHW, THW, THWN, XHHW, USE	TBS, SA, SIS, THHN, THHW, THW-2, THWN-2, RHH, RHW-2, USE-2, XHH, XHHW, XHHW-2, ZW-2	
	Copper			Aluminum or Copper-Clad Aluminum			
18	—	—	14	—	—	—	—
16	—	—	18	—	—	—	—
14 ①	20	20	25	—	—	—	—
12 ①	25	25	30	20	20	25	12 ①
10 ①	30	35	40	25	30	35	10 ①
8	40	50	55	30	40	45	8
6	55	65	75	40	50	60	6
4	70	85	95	55	65	75	4
3	85	100	110	65	75	85	3
2	95	115	130	75	90	100	2
1	110	130	150	85	100	115	1
1/0	125	150	170	100	120	135	1/0
2/0	145	175	195	115	135	150	2/0
3/0	165	200	225	130	155	175	3/0
4/0	195	230	260	150	180	205	4/0

FIGURE 4.13. CONDUCTOR CAPACITIES

Also shown on page 1.5-16 in Eaton's *Consulting Application Guide*.

Eaton Corporation
Electrical Services & Systems
13205 SE 30th Street, Ste. 101
Bellevue, WA 98005
United States
1-866-ETN-CARE
Eaton.com

Aidan Graham, P.E., Power Systems Engineering Zone Manager and Tom Johnson, Application Engineer

Charles J. Nochumson, P.E., National Application Engineer Phoenix, AZ, USA

Example: There is a 100 ampere feeder breaker feeding a 100 A Main Lug Only Panelboard A having the largest branch circuit breaker within it being a 40 A trip. There is 1.3 kA of fault at Panelboard A. Before checking for selective coordination requirements, the conductor would have been sized as #3.

Load Side Breaker	Breaker Family Type Trip Unit Minimum Trip Maximum Trip	EG T/M 125 A 125 A	F T/M 100 A 100 A	F T/M 150
BR, BAB, HQP & QC (120 Vac for 1-Pole, 120/240 Va				
15		1.2	1.0	1.5
20		1.2	1.0	1.5
30		1.2	1.0	1.5
40		0.8	1.0	1.5
50		0.8	—	1.5
60		0.8	—	1.5
70		—	—	1.5

The 100 A FD to BAB coordination won't work.

FIGURE 4.14. UNACCEPTABLE COORDINATION VALUES

In this example, a 150 A trip is required for selective coordination at the required 1.3 kA level. If a #3 conductor had been selected for the 100 A application because of the selective coordination requirement for a 150 A trip, the conductor would need to be increased to a 1/0 AWG. The bus ampacity of Panel A must be increased from 100 amperes to 150 amperes.

Load Side Breaker	Breaker Family Type Trip Unit Minimum Trip Maximum Trip	EG T/M 125 A 125 A	F T/M 100 A 100 A	F T/M 150
BR, BAB, HQP & QC (120 Vac for 1-Pole, 120/240 Va				
15		1.2	1.0	1.5
20		1.2	1.0	1.5
30		1.2	1.0	1.5
40		0.8	1.0	1.5
50		0.8	—	1.5
60		0.8	—	1.5
70		—	—	1.5

By changing the circuit breaker to 150 A, we can coordinate.

FIGURE 4.15. ACCEPTABLE COORDINATION VALUES

Be sure to review all NEC requirements applicable prior to making any changes to the design.

5.0 Appendix A — Eaton's Selective Coordination Industry Application

Refer to Eaton Corporation's *Selective Coordination Industry Application* (IA01200002E).

Eaton Corporation
Electrical Services & Systems
13205 SE 30th Street, Ste. 101
Bellevue, WA 98005
United States
1-866-ETN-CARE
Eaton.com

Aidan Graham, P.E., Power Systems Engineering Zone Manager and Tom Johnson, Application Engineer

Charles J. Nochumson, P.E., National Application Engineer Phoenix, AZ, USA

This Page Intentionally Left Blank.

Eaton Corporation
Electrical Services & Systems
13205 SE 30th Street, Ste. 101
Bellevue, WA 98005
United States
1-866-ETN-CARE
Eaton.com

Engineer's Guide to Selective Coordination

Aidan Graham, P.E., Power Systems Engineering Zone Manager and Tom Johnson, Application Engineer

Charles J. Nochumson, P.E., National Application Engineer Phoenix, AZ, USA

PowerChain Management®

Cutler-Hammer and PowerChain Management are registered trademarks of Eaton Corporation. NEMA is the registered trademark and service mark of the National Electrical Manufacturers Association. National Electrical Code and NEC are registered trademarks of the National Fire Protection Association, Quincy, Mass. UL is a registered trademark of Underwriters Laboratories Inc. IEEE is a registered trademark of The Institute of Electrical and Electronics Engineers, Incorporated. CSA is a registered trademark of the Canadian Standards Association.

© 2008 Eaton Corporation
All Rights Reserved
Printed in USA
Publication No. IA08304002E / Z7992
December 2008