ATC-600 RETROFIT KIT FOR 240/208 V AUTOMATIC TRANSFER SWITCH

WARNING

THIS INSTRUCTION IS NOT A COMPLETE SOURCE OF INFORMATION ON THE TRANSFER EQUIPMENT. INSTALLATION SHOULD NOT BE STARTED UNTIL THE ENTIRE INSTRUCTION BOOK HAS BEEN REVIEWED AND UNDERSTOOD. FAILURE TO FOLLOW INSTRUCTIONS CAN RESULT IN DEATH, SEVERE PERSONAL INJURY, OR PROPERTY DAMAGE.

CAUTION

UTILITY POWER MUST BE REMOVED FROM THE TRANSFER SWITCH PRIOR TO COMPLETEING THIS RETROFIT.

THE RETROFIT KIT CONSISTS OF THE FOLLOWING:

1. **ATC-600 CONTOLLER**
2. **LOGIC WIRE HARNESS (90” IN LENGTH)**
3. **TERMINAL BLOCK WIRE HARNESS (24” IN LENGTH)**
4. **DEVICE PANEL IF REQUIRED (GENERALLY CONTAINS SERVICE ENTRANCE SWITCH, BYPASS PUSH BUTTON, ETC.)**

Removal of ATC-200:

Step 1: Set the ON/AUTO/OFF switch on your generator to the **OFF** position.

Step 2: Disconnect the Engine Start wires from the Red Terminals (Terminals 1 and 2).

Step 3: Disconnect any other customer connected wires from the Terminal Blocks (Option 26D, etc.)

Step 4: In this order, disconnect P3/S3, P1/S1, and P2/S2.

Step 5: Remove the four-(4) connectors from the back if the ATC-200 controller.

Step 6: Remove six-(6) Torx screws from the front of the ATC-200. Support the ATC-200 when removing the screws so the controller doesn’t fall. Discard the ANSI gray trim ring that was on the outside of the enclosure on the front of the ATC-200 controller. It will not be reused.

Step 7: Remove any associate Device Panels (if required). These panels generally contain options such as Service Disconnect, Bypass Push Button, etc.

Step 8: Unplug the wire harness connectors at the Terminal Blocks and completely remove the wire harness by cutting the wire ties. The associated wire tie mounts will be reused.

Step 9: Remove four-(4) screws from the NRA and ERA relay bases and remove relays (Figure 1). Call the factory if these relays are being utilized.

Step 10: Loosen and remove the Terminal Block locking End Plates (Figure 1).

Step 11: Move the Terminal Blocks to one side and remove the Din Rail mounting screws (located under the Terminal Blocks, Figure 2).

Step 12: The panel should now be clear of components.

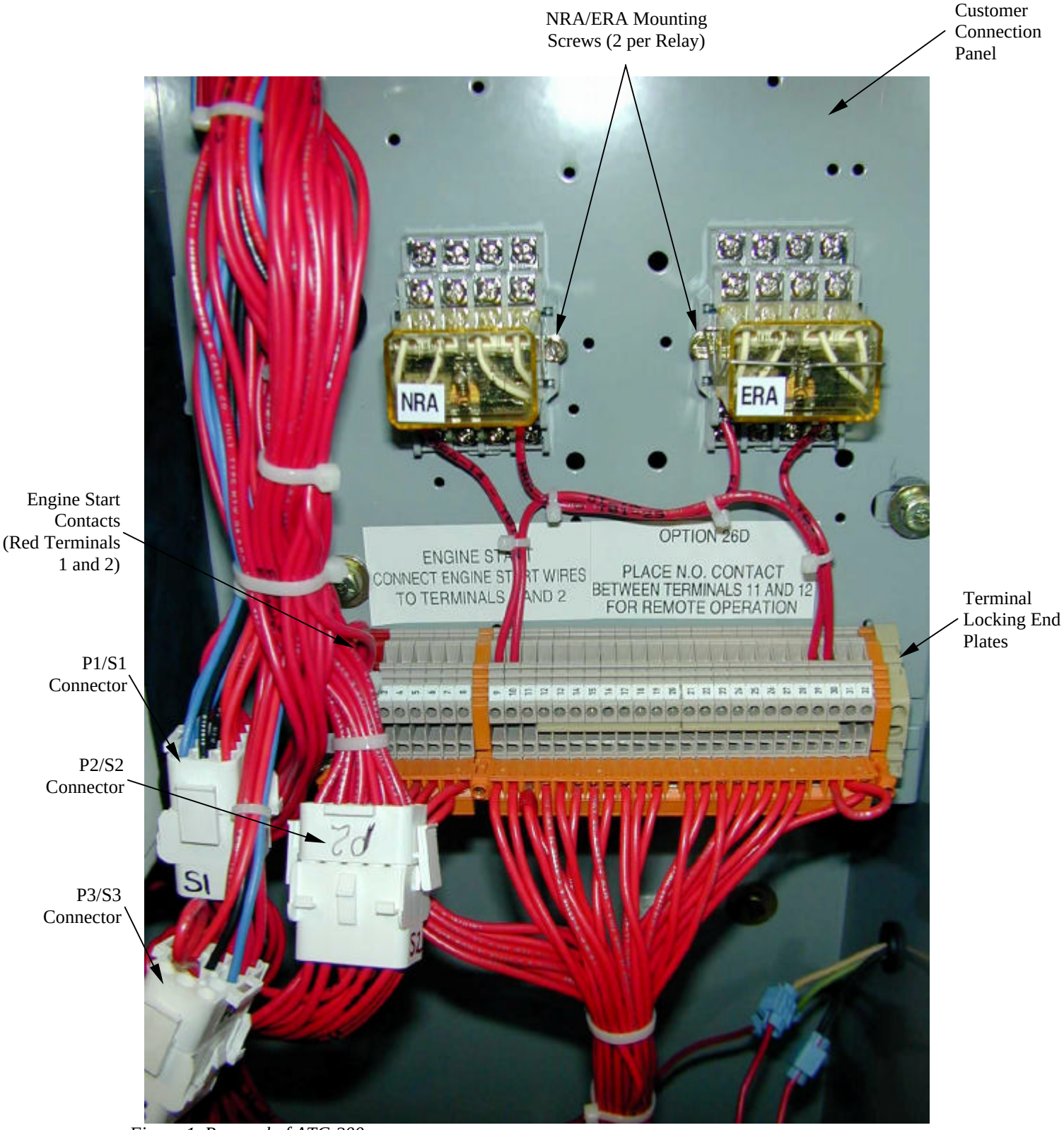

Figure 1, Removal of ATC-200

Installation of ATC-600:

Step 1: Mount the ATC-600 with the six-(6) supplied Hi-Lo screws in the cutout that contained the ATC-200. Note that the ATC-600 mounts through the cutout from the front door.

Step 2: Mount the associated molded Device Panel (if required) with six-(6) supplied Hi-Lo screws and Star washers in the cutout that contained the old Device Panel.

Step 3: Mount the Terminal Block wire harness (Figure 2). Three-(3) one-half inch (for Din Rail and ground wire) and two-(2) one inch (for 2 pole Relay base) self-tapping 8-32 screws are provided. Use existing holes located on the Connection Panel that contained the old Terminal Blocks.

Step 4: Mount the Logic Wire Harness to the ATC-600 Controller. Install J4 and J5 first. Install J1, J2, and J3 next.
DO NOT plug in J7 until Step 7 in complete.

Step 5: Use supplied wire ties to support the Logic Wire Harness to the existing wire tie mounts.

Step 6: Plug in P4/S4, P5/S5, and P6/S6. This will mate the Logic Wire Harness to the Terminal Block Wire Harness.

Step 7: Install the Engine Start wires into the Red Terminal Blocks (Terminal Blocks 1 and 2).

Step 8: Install any other customer connected wires (Option 26D, etc.).

Step 9: In this order, Install P3/S3, P2/S2, and P1/S1 connectors. If you are not sure which connectors are which, take the time to read the Wire Number on each wire. Continuous Marking is present on every wire, stating where it goes (I.E. P3-1 to P5-4).

Step 10: Re-energize the Transfer Switch.

Step 11: Check for 120 VAC at Pins 1 and 2 on Plug J7 on the Logic Wire Harness (Control Power for the ATC-600).

Step 12: If 120 VAC is available then connect J7 to the ATC-600. If 120 VAC is NOT available, make sure all connections are complete and normal power is available. Call the Cutler-Hammer Warranty Department if problems persist.

Step 13: Turn the ON/AUTO/OFF switch on your Generator to the ON position.

Step 14: Perform the Engine Test per the Instruction Book.

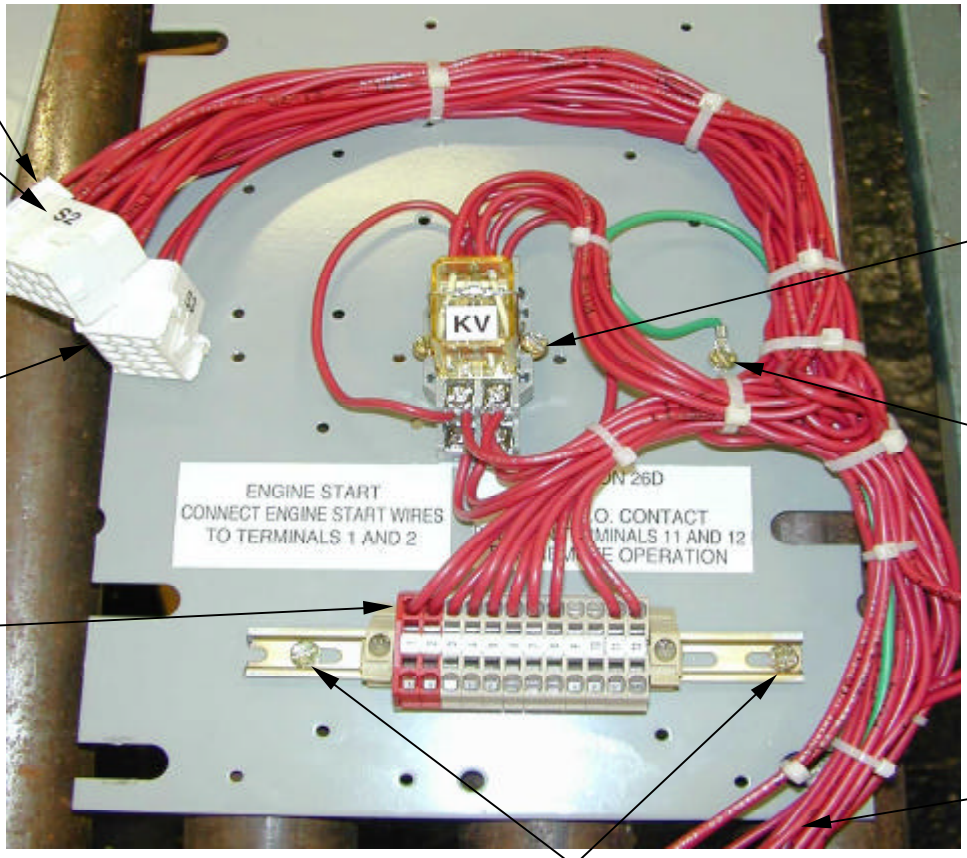

Figure 2, Installation of ATC-600