EATON | Cutler-Hammer

Load Shed Installation for RLCM/CHGENLC, RLCU, and CHGEN ATSs

Instruction Leaflet

New Information

Description	*Page*
Installation and Wiring	**2**

⚠ WARNING

READ AND UNDERSTAND THE INSTRUCTIONS CONTAINED HEREINAFTER BEFORE ATTEMPTING TO UNPACK, ASSEMBLE, INSTALL, OPERATE, OR MAINTAIN THIS EQUIPMENT.

HAZARDOUS VOLTAGES ARE PRESENT INSIDE TRANSFER SWITCH ENCLOSURES THAT CAN CAUSE DEATH OR SEVERE PERSONAL INJURY. FOLLOW PROPER INSTALLATION, OPERATION, AND MAINTENANCE PROCEDURES TO AVOID THESE VOLTAGES.

All possible contingencies that may arise during installation, operation, or maintenance, and all details and variations of this equipment do not purport to be covered by these instructions. If further information is required by the purchaser regarding a particular installation, application, or maintenance activity, please contact an authorized Eaton sales representative or the installing contractor.

SECTION 1: INSTALLATION AND WIRING

1.1 General

The Eaton load shed provides four (4) sets of contacts that can be used to control connected loads on the generator (Source 2). (See Figure 3 for load shed connection details.) It has been designed for installation in both service entrance (SE) and standard RLCM/CHGENLC, RLCU, and CHGEN ATSs (see Figures 1 and 2).

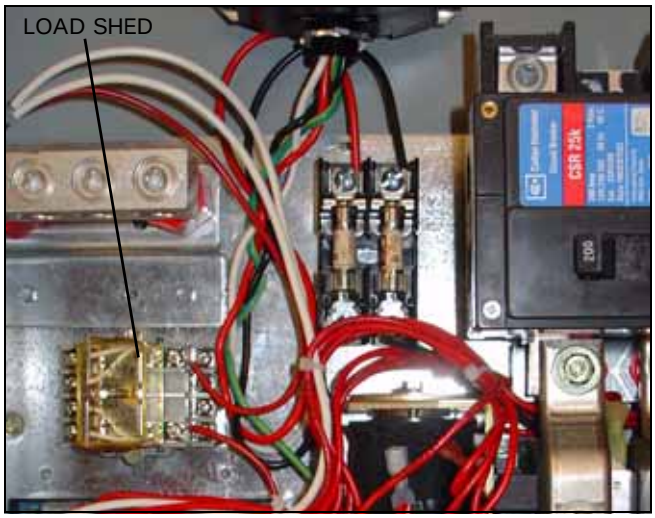

Figure 1. Load Shed Mounted in an SE Enclosure.

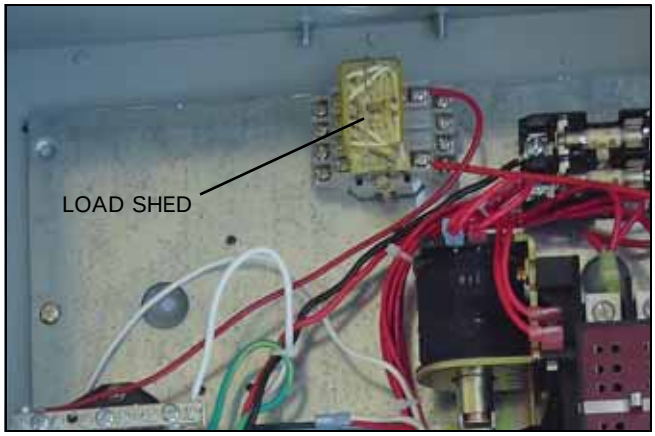

Figure 2. Load Shed Mounted in a Standard Enclosure.

The load shed contains both normally CLOSED and normally OPEN contacts. This feature provides the capability that when the ATS is on generator (Source 2) power, the relay would energize, causing the normally OPEN contacts to close. This provides the user with four (4) circuits in which power would be available (see Figure 3). This is useful if the capacity of the generator in the system is not large enough to run all connected loads. This configuration allows for selected loads to be enabled which is useful in running emergency lighting, smaller cooling/heating devices in place of air conditioners or furnaces, and other emergency only related circuits.

This feature can also shed larger loads (i.e.: air conditioners, hot tubs, etc.). This can be done by connecting the loads to the normally CLOSED contacts. When the generator (Source 2) power becomes available, the relay energizes and the normally Closed contacts open, thus shedding the selected loads.

Note: Terminals 1 through 12 on the load shed provide a number of options for taking advantage of the functionality of the load shed. Refer to Figure 3 for a diagram illustrating the use of these terminals to take advantage of its functionality.

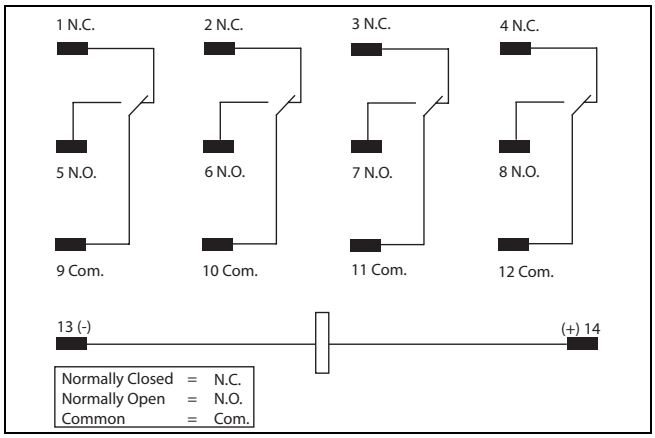

Figure 3. Additional Connections at the Load Shed.

1.2 Installing a Load Shed in a 100 A or 200 A RLCM/CHGENLC, RLCU, or CHGEN ATS

The steps detailed in this section explain how to install a load shed in a 100 A or 200 A RLCM/CHGENLC, RLCU, or CHGEN ATS.

Step 1: Turn the utility (Source 1) power off and turn the generator (Source 2) control selector switch to the "OFF" position before attempting to install the load shed.Align the load shed with the existing holes near the top of the base plate, directly above the contactor, for standard ATSs (see Figure 4), and directly below the neutral bar for SE ATSs (see Figure 5). Secure the load shed to the base plate using the hardware supplied.

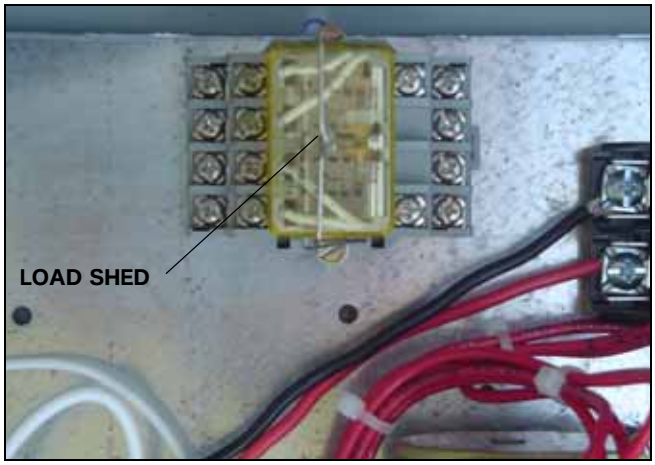

Figure 4. Load Shed Installed on the Base Plate of a Standard ATS

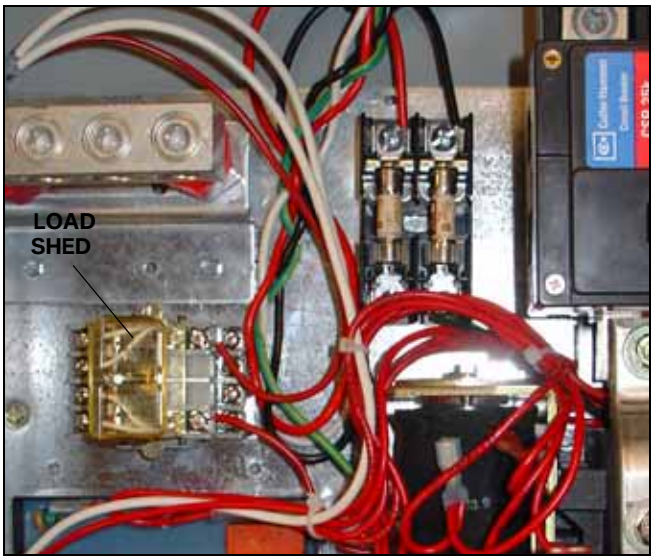

Figure 5. Load Shed Installed on the Base Plate of an SE ATS.

Step 2: Connect one of the supplied wires to terminal # 14 on the load shed (see Figure 6). Route the wire from the load shed to the neutral bar. On 100 A ATSs, cut the wire to the proper length, strip 0.25 in. (6.35 mm) of insulation from the end of the wire, then crimp the supplied ring terminal onto the wire. Using a blade screwdriver, remove the screw securing the white wire of the main wiring harness to the neutral bar. Align the ring terminal of the white wire with the load shed wire ring terminal and secure both to the neutral bar using the screw just removed (see Figure 7). Refer to the wiring diagrams in Figures 10, 11, and 12 for connection locations for the load shed wires.

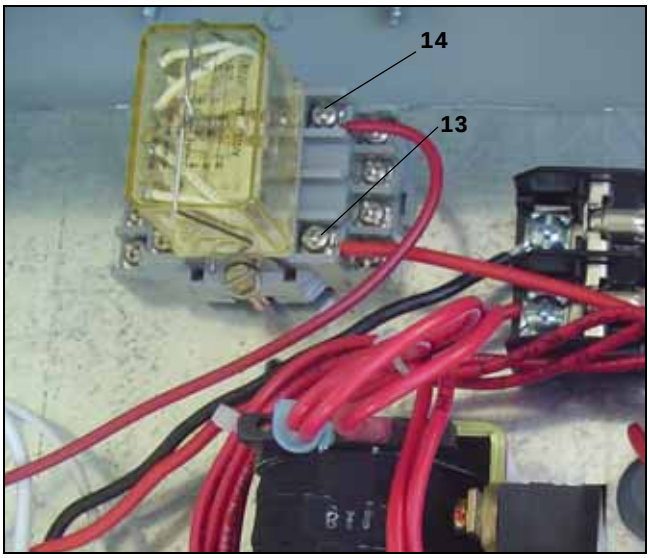

Figure 6. Main Wire Connections at the Load Shed.

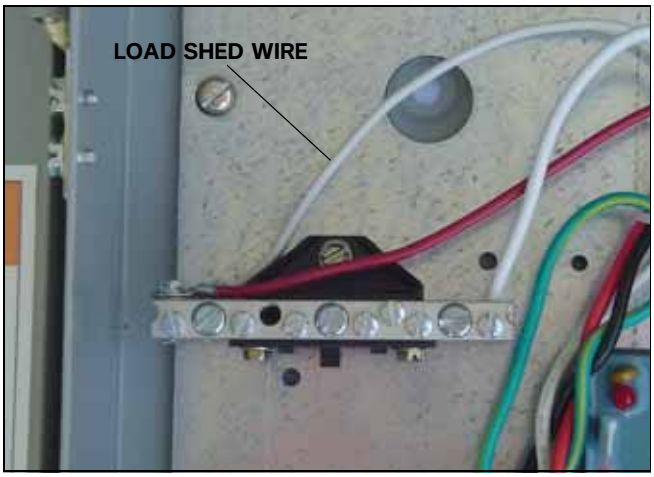

Figure 7. Load Shed Wire Connected to the Neutral Bar (100 A ATS).

On 200 A ATSs, remove the female flag connector from the male flag terminal on the neutral bar. Cut the female flag connector from the white wire in the main wiring harness and the white wire from the optional TVSS if installed. Cut the load shed wire to the proper length. Strip 0.25 in. (6.35 mm) of insulation from the end of each of the wires, then crimp the supplied larger female flag connector onto the wires. Connect the female flag connector to the male flag terminal on the neutral bar (see Figure 8). Refer to the wiring diagrams in Figures 10, 11, and 12 for connection locations for the load shed wires.

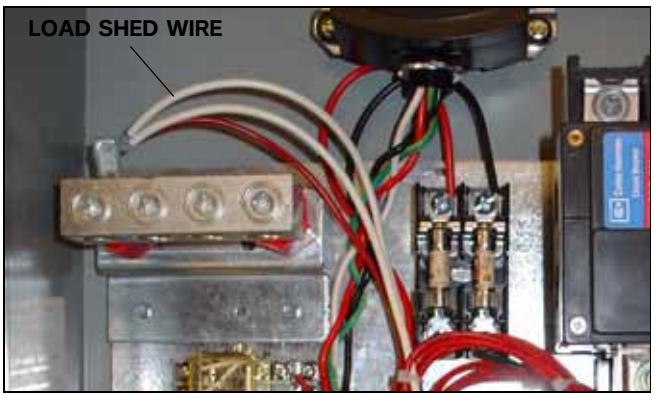

Figure 8. Load Shed Wire Connected to the Neutral Bar (200 A ATS).

Step 3: Connect one of the supplied wires to terminal # 13 on the load shed (see Figure 6). Route the wire from the load shed to the auxiliary switch on the right side of the contactor. Cut the wire to the proper length and strip 0.25 in. (6.35 mm) of insulation from the end of the wire. Crimp the smaller female flag connector supplied onto the end of the wire. Connect the female flag connector to the male flag terminal on the normally OPEN contact of the auxiliary switch (see Figure 9).

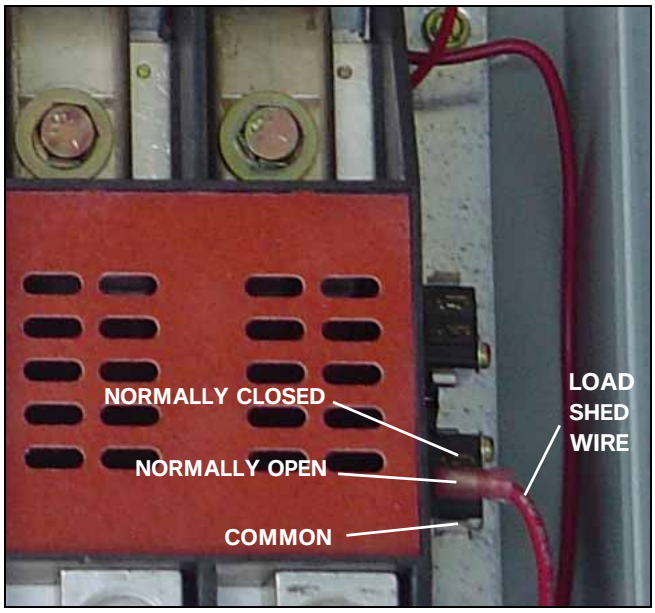

Figure 9. Load Shed Wire Connected to the Normally OPEN Terminal on the Auxiliary Switch.

Step 4: Apply utility (Source 1) power and place the generator control selector switch in the "AUTO" position after the load shed has been replaced. Test the system for proper functionality.

2.2 Wiring Diagrams

Figures 10, 11, and 12 present overall wiring diagrams for RLCM/CHGENLC, RLCU, and CHGEN ATSs with load sheds installed. Refer to Figure 3 for wiring at the load shed.

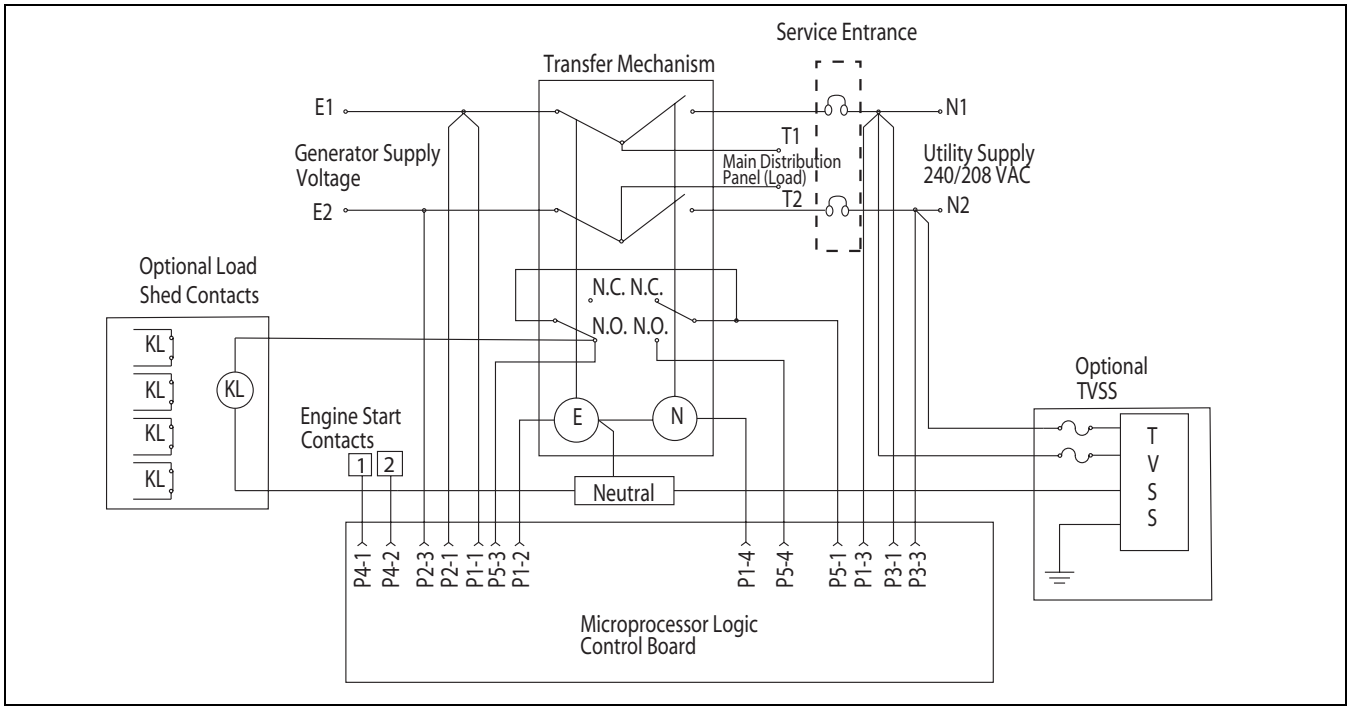

Figure 10. Wiring Diagram for Load Shed Installed in a RLCM/CHGENLC ATS.

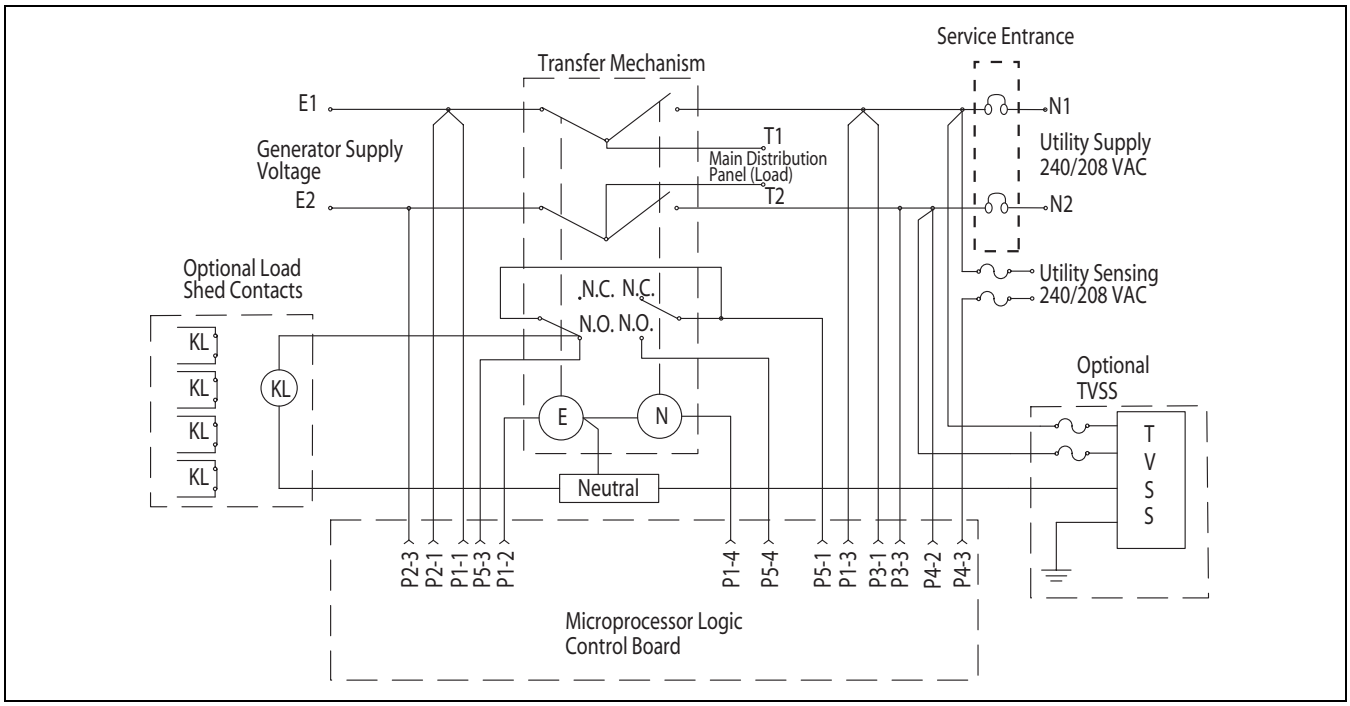

Figure 11. Wiring Diagram for Load Shed Installed in a RLCU ATS.

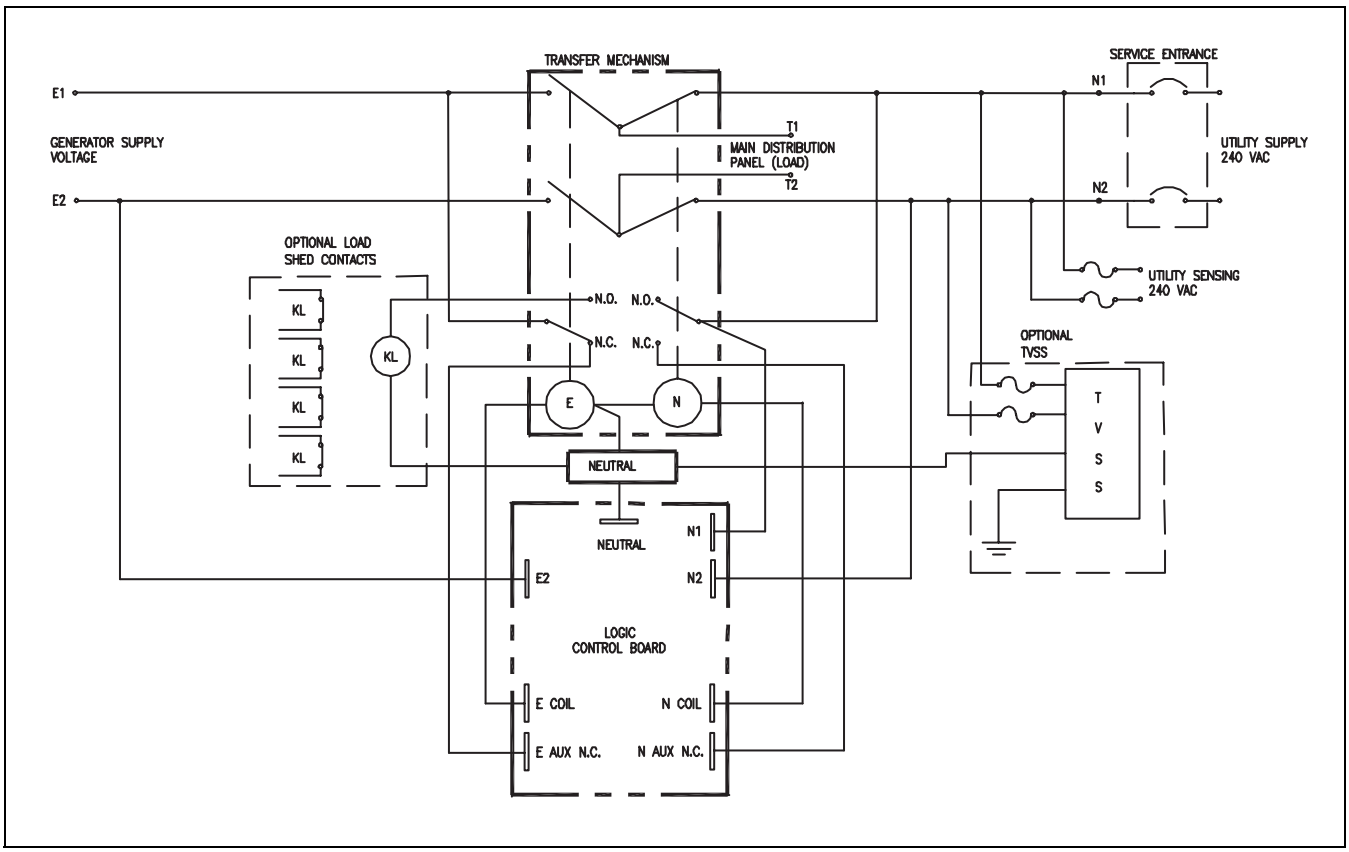

Figure 12. Wiring Diagram for Load Shed Installed in a CHGEN ATS.

Notes:

This instruction booklet is published solely for information purposes and should not be considered all-inclusive. If further information is required, you should consult an authorized Eaton sales representative.

The sale of the product shown in this literature is subject to the terms and conditions outlined in appropriate Eaton selling policies or other contractual agreement between the parties. This literature is not intended to and does not enlarge or add to any such contract. The sole source governing the rights and remedies of any purchaser of this equipment is the contract between the purchaser and Eaton.

NO WARRANTIES, EXPRESSED OR IMPLIED, INCLUDING WARRANTIES OF FITNESS FOR A PARTICULAR PURPOSE OR MERCHANTABILITY, OR WARRANTIES ARISING FROM COURSE OF DEALING OR USAGE OF TRADE, ARE MADE REGARDING THE INFORMATION, RECOMMENDATIONS, AND DESCRIPTIONS CONTAINED HEREIN. In no event will Eaton be responsible to the purchaser or user in contract, in tort (including negligence), strict liability or otherwise for any special, indirect, incidental or consequential damage or loss whatsoever, including but not limited to damage or loss of use of equipment, plant or power system, cost of capital, loss of power, additional expenses in the use of existing power facilities, or claims against the purchaser or user by its customers resulting from the use of the information, recommendations and description contained herein.

Eaton Electrical
1000 Cherrington Parkway
Moon Township, PA 15108-4312
USA
tel: 1-800-525-2000
www.eatonelectrical.com

© 2005 Eaton Corporation
All Rights Reserved
Printed in USA
Publication No. IL01602009E/TBG00089
February 2005

EATON | Cutler-Hammer