EATON | Cutler-Hammer

TVSS Installation for RLCM/CHGENLC, RLCU, and CHGEN ATSs

Instruction Leaflet

New Information

Description	*Page*
Installation and Wiring	**2**

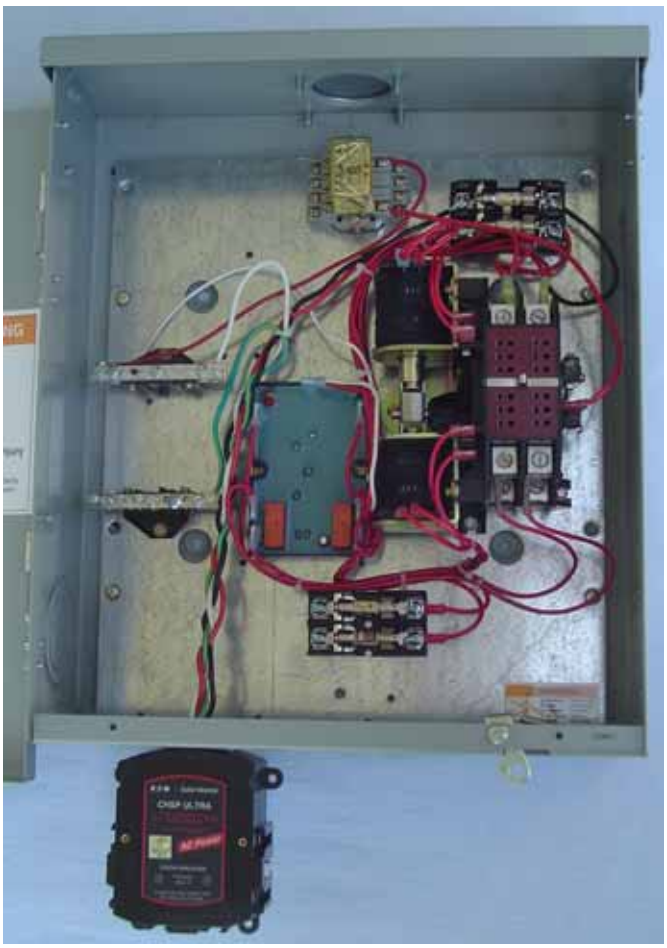

⚠ WARNING

READ AND UNDERSTAND THE INSTRUCTIONS CONTAINED HEREINAFTER BEFORE ATTEMPTING TO UNPACK, ASSEMBLE, OPERATE, OR MAINTAIN THIS EQUIPMENT.

HAZARDOUS VOLTAGES ARE PRESENT INSIDE TRANSFER SWITCH ENCLOSURES THAT CAN CAUSE DEATH OR SEVERE PERSONAL INJURY. FOLLOW PROPER INSTALLATION, OPERATION, AND MAINTENANCE PROCEDURES TO AVOID THESE VOLTAGES.

All possible contingencies that may arise during installation, operation, or maintenance, and all details and variations of this equipment do not purport to be covered by these instructions. If further information is required by the purchaser regarding a particular installation, application, or maintenance activity, please contact an authorized Eaton sales representative or the installing contractor.

SECTION 1: INSTALLATION AND WIRING

1.1 General

1.1.1 TVSS Surge Protection

The Eaton transient voltage surge suppressor (TVSS) is designed to protect electrical and electronic loads from transients and surge disturbances on your utility (Source 1) ac power line and is intended for both indoor and outdoor usage. It provides a 70 KA, 240/120 Vac, 1 ohm surge device and can be installed in both service entrance (SE) and standard RLCM/CHGENLC, RLCU, and CHGEN ATSs (see Figures 1 and 2).

Figure 1. TVSS Mounted in an SE Enclosure.

Figure 2. TVSS Mounted to the Outside of a Standard Enclosure.

1.1.2 Telephone and Cable Surge Protection

The telephone line surge protection (SurgeTel) feature offers 4-pair telephone line protection.

The TV and satellite cable surge protection (SurgeCable) feature offers two (2) coaxial line protection (cable/satellite TV).

Both the SurgeTel and SurgeCable are designed to mount directly to the TVSS when it is externally mounted on a standard ATS. However, if the TVSS is mounted inside an SE ATS, the SurgeTel and SurgeCable must be mounted to a surface outside the ATS.

1.2 Installing the TVSS Externally on a Standard or SE 100 A and 200 A ATS

Note: If you are installing a TVSS in a SE ATS, it can be installed internally. See Section 1.3 for detailed installation instructions.

Note: Because of the size of the enclosure, if you have either a 100 A or 200 A standard ATS, the TVSS CANNOT be installed inside the enclosure. It will have to be mounted on the outside of the enclosure in a suitable position (see Figure 3).

Figure 3. Possible Location for and Externally Mounted TVSS.

Step 1: Turn the utility (Source 1) power off and turn the generator (Source 2) control selector switch to the "OFF" position before attempting to install the externally mounted TVSS.

Step 2: Determine the desired location for mounting the TVSS. An existing 0.50 in. (1.25 cm) knockout can be used or a 0.50 in. (1.25 cm) hole can be drilled in the enclosure.

⚠ CAUTION

EXTREME CARE SHOULD BE TAKEN TO PROTECT THE ATS FROM DRILL CHIPS, FILINGS, AND OTHER CONTAMINANTS WHEN MAKING THE TVSS MOUNTING HOLE TO PREVENT DAMAGE OR A FUTURE MALFUNCTION

⚠ CAUTION

TO MEET APPLICABLE CODES, AN EXTERNALLY MOUNTED TVSS MUST BE MOUNTED BELOW THE LEVEL OF THE BOTTOM LUGS (LOAD LUGS) OF THE CONTACTOR.

Figure 4. TVSS Must be Mounted Below the Level of the Load Lugs.

Step 3: Remove the lock nut from the nipple of the TVSS.

Step 4: Feed the TVSS wires and mounting nipple through the knockout or hole drilled in the ATS enclosure.

Step 5: Secure the TVSS to the ATS enclosure using the lock nut removed in Step 3. Be sure to firmly secure the TVSS using an appropriate tool to fully tighten the lock nut (see Figure 5).

Figure 5. TVSS Secured to the ATS Enclosure.

Note: The length of the four (4) TVSS wires can affect the performance of the TVSS. During installation, the wires should be kept as short and as close to identical length as possible. In keeping the length of the wires as equal as possible, they should be "braided" to increase the effectiveness of the TVSS.

Step 6: Mount the TVSS fuse block to the existing holes on the ATS base plate using the hardware provided. For standard 100 A and 200 A ATSs, the mounting holes are directly above the contactor (see Figure 6).

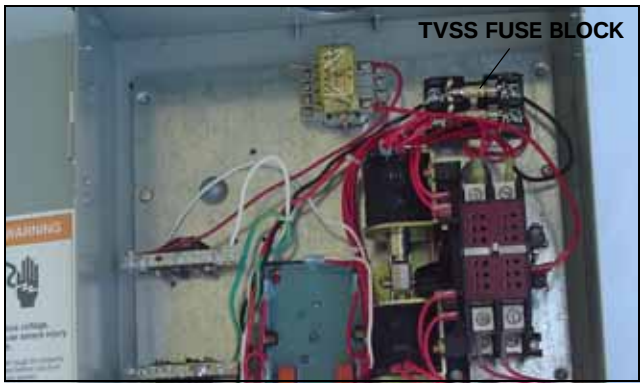

Figure 6. TVSS Fuse Block Mounted in a Standard ATS.

Step 7: Install the supplied fuses in the TVSS fuse block.

Step 8: Based on the following connection points and wire routing, determine which TVSS wire(s) will be the longest.

Wire Color	Connection Point
Red	TVSS fuse block
Black	TVSS fuse block
White	ATS neutral bar
Green/Yellow	ATS ground bar

Cut all four (4) wires to the same length necessary to reach the furthest connection point. Braid any excess wire length for the other connection points.

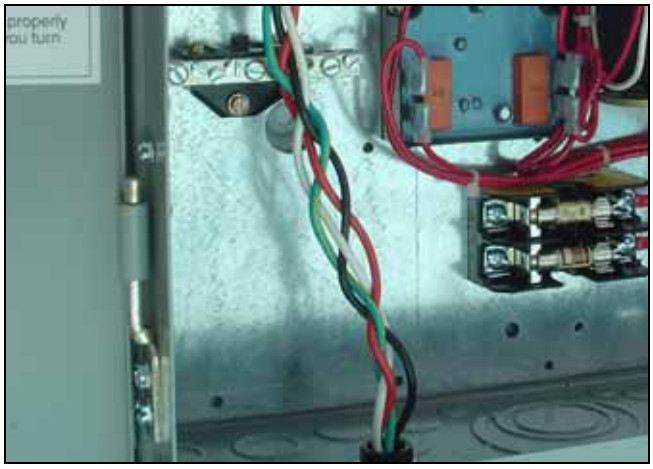

Figure 7. Braided TVSS Wires.

Step 9: The red and black wires from the TVSS are to be connected to the terminals of the TVSS fuse block. Strip 0.25 in. (6.35 mm) of insulation from the end of the wires.

Step 10: Connect the red and black TVSS wires to the TVSS fuse block, using a blade screwdriver (see Figure 8).

Figure 8. TVSS Red and Black Wires Connected to the TVSS Fuse Block.

Step 11: The white wire from the TVSS will be connected to the neutral bar. Cut the white wire to a suitable length to connect to the neutral bar then strip 0.25 in. (6.35 mm) of insulation from the end of the wire.

Step 12: On 100 A standard ATSs, secure the white TVSS wire to a receptacle on the neutral bar using a blade screwdriver (see Figure 9).

Note: On 200 A standard ATSs, the white TVSS wire must be connected to the male flag receptacle on the neutral bar (see Figure 10). Remove the female flag connector from the neutral bar. Cut the female flag connector off of the white wire from the main wiring harness and the red wire from the optional load shed if installed. Strip 0.25 in. (6.35 mm) of insulation from the white TVSS wire, the white wire from the main wiring harness, and red wire from the option load shed if installed. Crimp the supplied female flag connector on the wires so they can be connected to the male flag terminal on the neutral bar.

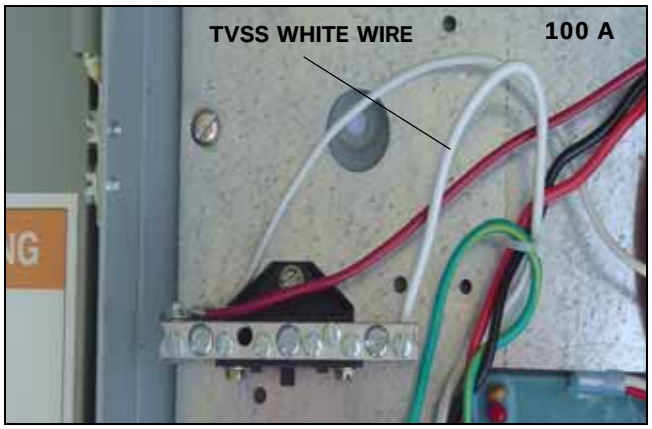

Figure 9.TVSS White Wire Connected to the 100 A Neutral Bar.

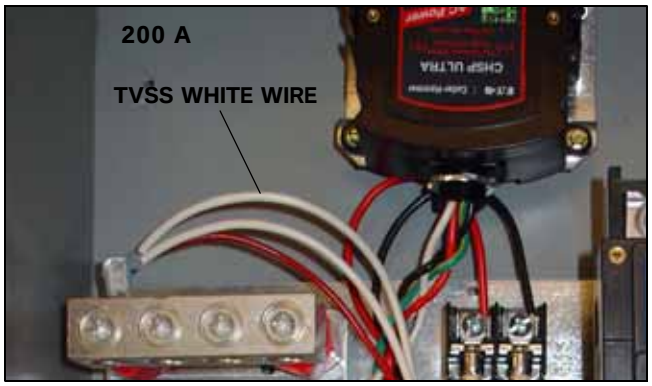

Figure 10. TVSS White Wire Connected to the 200 A Neutral Bar.

Step 13: The green / yellow wire from the TVS will be connected to the ground bar. Cut the green / yellow wire to a suitable length to connect to the ground bar then strip 0.25 in. (6.35 mm) of insulation from the end of the wire.

Step 14: Secure the green / yellow TVSS wire to a receptacle on the ground bar using a blade screwdriver (see Figure 12).

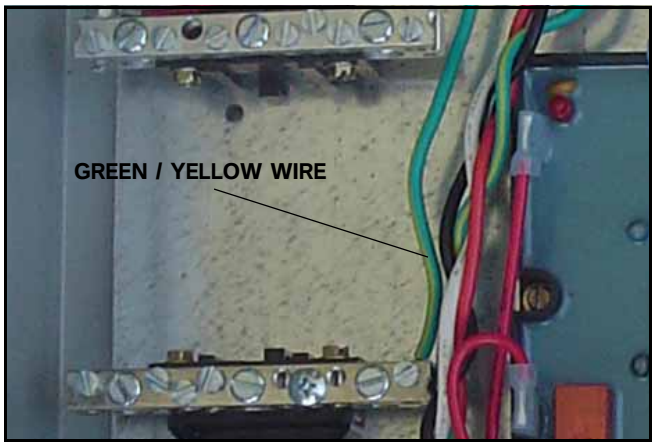

Figure 11. TVSS Green / Yellow Wire Connected to the Ground Bar.

Step 15: Using the wires cut from the red and black TVSS wires in Step 7 (if long enough), or 600 V 14 AWG wire, make two (2) wire leads that will run from the TVSS fuse block to the male spade connectors at the utility lugs on the contactor.

Step 16: Remove the wiring harness connections at the male flag terminal at the N-1 utility lug. Remove the crimp on female flag connector. Strip 0.25 in. (6.35 mm) of insulation from the end of the TVSS wire and the N-1 harness wires. Using the new crimp-on female flag connector supplied, connect the N-1 harness wires with one of the TVSS leads (see Figure 12).

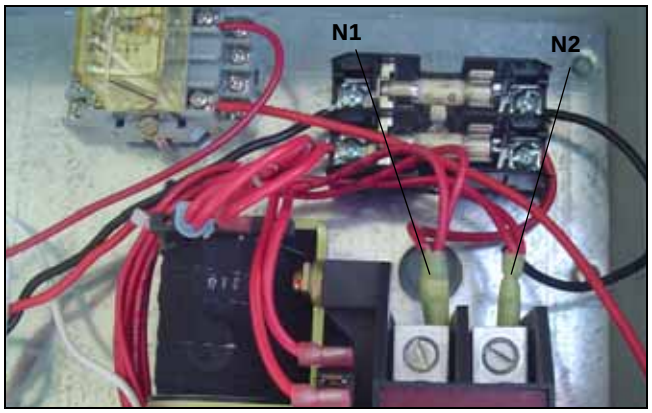

Figure 12. Connection Points at the TVSS Fuse Block and Utility Lugs.

Step 17: Repeat the process for the N-2 wires.

Step 18: Reconnect the N-1 and N-2 female flag connectors to the N-1 and N-2 male flag terminals at the utility lugs.

Step 19: Apply utility (Source 1) power and place the generator control selector switch in the "AUTO" position after the externally mounted TVSS has been installed. Test the system for proper functionality.

1.3 Installing the TVSS Internally in a SE 100 A and 200 A ATS

Note: Even though there is ample room and existing mounting holes within an SE CHGEN ATS to install an optional TVSS, it can also be mounted externally on the ATS. If you want to externally mount the TVSS, follow the instructions in Section 1.2.

Figure 13. TVSS Installed Inside an SE ATS.

Step 1: Turn the utility (Source 1) power off and turn the generator (Source 2) control selector switch to the "OFF" position before attempting to replace the TVSS.

Step 2: Align the TVSS Mounting bracket with the existing holes in the back of the enclosure, located above the base plate. Secure the mounting bracket to the enclosure using the hardware provided and a flat blade screwdriver (see Figure 14).

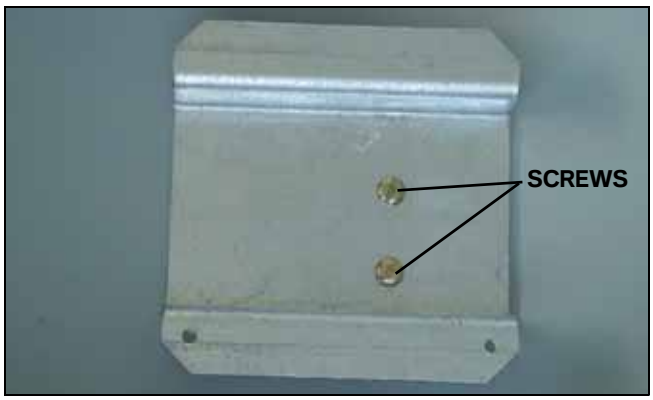

Figure 14. TVSS Mounting Bracket Secured to the Back of the Enclosure.

Step 3: Align the TVSS with the holes in the mounting bracket. Secure the TVSS to the mounting brackets using the hardware provided and a flat blade screwdriver or 0.25 in. nut driver. Note that the TVSS wires should facing the ATS base plate and installed components (see Figure 15).

Figure 15. TVSS Installed on the Mounting Bracket.

Step 4: Mount the TVSS fuse block to the existing holes on the ATS base plate using the hardware provided. For 100 A and 200 A SE ATSs, the holes are directly to the left of the contactor.

Step 5: Install the supplied fuses in the TVSS fuse block (see Figure 16).

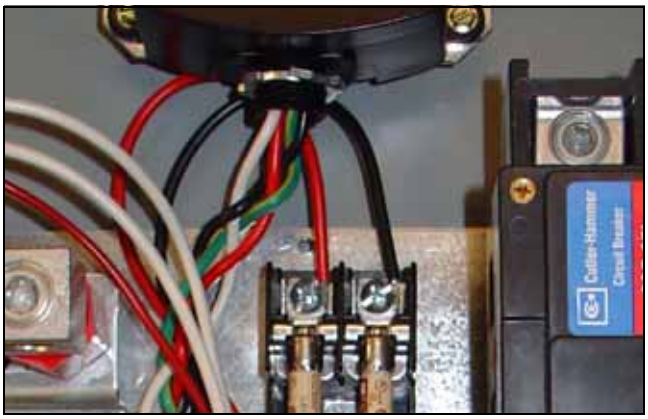

Figure 16. TVSS Fuse Block Mounted in a SE ATSs.

Note: The length of the four (4) TVSS wires can affect the performance of the TVSS. During installation, the wires should be kept as short and as close to identical length as possible. In keeping the length of the wires as equal as possible, they should be "braided" to increase the effectiveness of the TVSS.

Step 6: Based on the following connection points and wire routing, determine which TVSS wire(s) will be the longest.

Wire Color	Connection Point
Red	TVSS fuse block
Black	TVSS fuse block
White	ATS neutral bar
Green/Yellow	ATS ground bar

Cut all four (4) wires to the same length necessary to reach the furthest connection point. Braid any excess wire length for the other connection points.

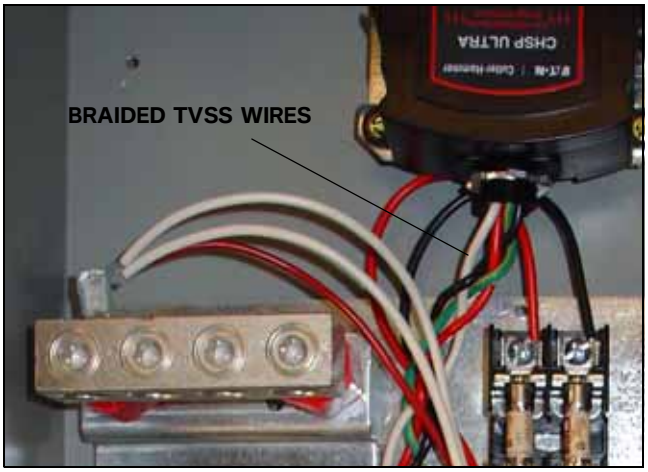

Figure 17. Braided TVSS Wires.

Step 7: The red and black wires from the TVSS are to be connected to the terminals of the TVSS fuse block. Strip 0.25 in. (6.35 mm) of insulation from the end of the wires.

Step 8: Connect the red and black TVSS wires to the TVSS fuse block, as shown, using a blade screwdriver (see Figure 18).

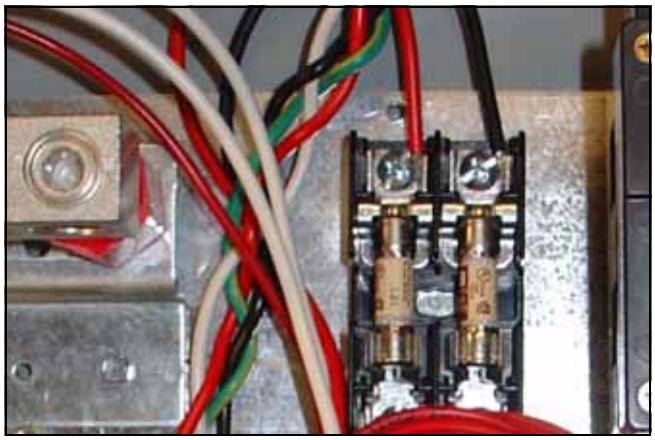

Figure 18. TVSS Red and Black Wires Connected to the TVSS Fuse Block.

Step 9: The white wire from the TVSS will be connected to the neutral bar. Cut the white wire to a suitable length to connect to the neutral bar then strip 0.25 in. (6.35 mm) of insulation from the end of the wire.

Step 10: On 100 A SE ATSs, secure the white TVSS wire to a receptacle on the neutral bar using a blade screwdriver (see Figure 19).

Note: On 200 A SE ATSs, the white TVSS wire must be connected to the male flag receptacle on the neutral bar. Remove the female flag connector from the neutral bar. Cut the female flag connector off of the white wire from the main wiring harness and the red wire from the optional load shed if installed. Strip 0.25 in. (6.35 mm) of insulation from the white TVSS wire, the white wire from the main wiring harness, and red wire from the optional load shed if installed. Crimp the supplied female flag connector on the wires so they can be connected to the male flag terminal on the neutral bar (see Figure 20).

Figure 19. TVSS White Wire Connected to the 100 A Neutral Bar.

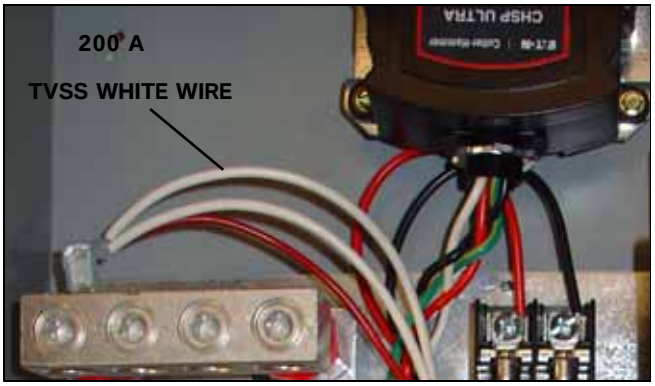

Figure 20. TVSS White Wire Connected to the 200 A Neutral Bar.

Step 11: The green / yellow wire from the TVS will be connected to the ground bar. Cut the green / yellow wire to a suitable length to connect to the ground bar then strip 0.25 in. (6.35 mm) of insulation from the end of the wire.

Step 12: Secure the green / yellow TVSS wire to a receptacle on the ground bar using a blade screwdriver (see Figure 21).

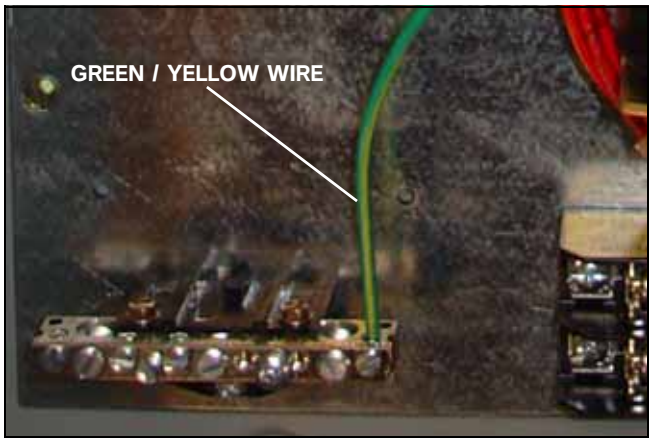

Figure 21. TVSS Green / Yellow Wire Connected to the Ground Bar.

Step 13: Using the wires cut from the red and black TVSS wires in Step 7 (if long enough), or 600 V 14 AWG wire, make two (2) wire leads that will run from the TVSS fuse block to the male spade connectors at the utility lugs on the contactor (see Figure 22).

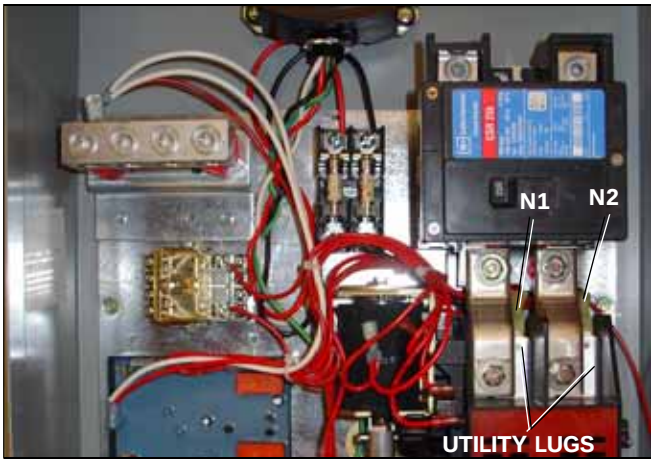

Figure 22. Connection Points at the TVSS Fuse Block and Utility Lugs.

Step 14: Remove the wiring harness connections at the male flag terminal at the N-1 utility lug. Remove the crimp on female flag connector. Strip 0.25 in. (6.35 mm) of insulation from the end of the TVSS wire and the N-1 harness wires. Using the new crimp-on female flag connector supplied, connect the N-1 harness wires with one of the TVSS leads (see Figure 22).

Step 15: Repeat the process for the N-2 wires.

Step 16: Reconnect the N-1 and N-2 female flag connectors to the N-1 and N-2 male flag terminals at the utility lugs.

Step 17: Apply utility (Source 1) power and place the generator control selector switch in the "AUTO" position after the internally mounted TVSS has been installed. Test the system for proper functionality.

1.4 SurgeTel Installation

Note: The Eaton SurgeTel is designed to mount directly to the TVSS when it is externally mounted to the ATS enclosure (see Figure 23). If the TVSS was installed inside the 100 A or 200 A SE ATS enclosure, the SurgeTel MUST BE mounted outside the enclosure (see Figure 24). See the Instruction Bulletin supplied with the SurgeTel for additional information.

Figure 23. SurgeTel Installed on the Externally Mounted TVSS.

Figure 24. SurgeTel Mounted Externally When the TVSS Is Internally Mounted in a SE ATS.

1.4.1 Attaching the SurgeTel to an Externally Mounted TVSS

Step 1: Align the quick connector with the receptacle on the right side, left side, or bottom of the TVSS. Slide the SurgeTel into the receptacle until completely seated (see Figure 25).

Note: If the SurgeTel will be mounted to the TVSS, no ground wire is required between the SurgeTel and ATS. The TVSS ground will also ground the SurgeTel.

Note: The SurgeTel can also be mounted to other Eaton surge protection devices that incorporate the quick connect feature.

Figure 25. SurgeTel Mounted to the TVSS.

1.4.2 Mounting the SurgeTel with an Internally Mounted TVSS

Figure 26. SurgeTel Installed Separate from the TVSS.

Step 1: Remove the screw in the middle of the back of the new SurgeTel using a Phillips head screwdriver. Attach the auxiliary ground terminal strip provided to the back of the SurgeTel using the Phillips head screw just removed (see Figure 27).

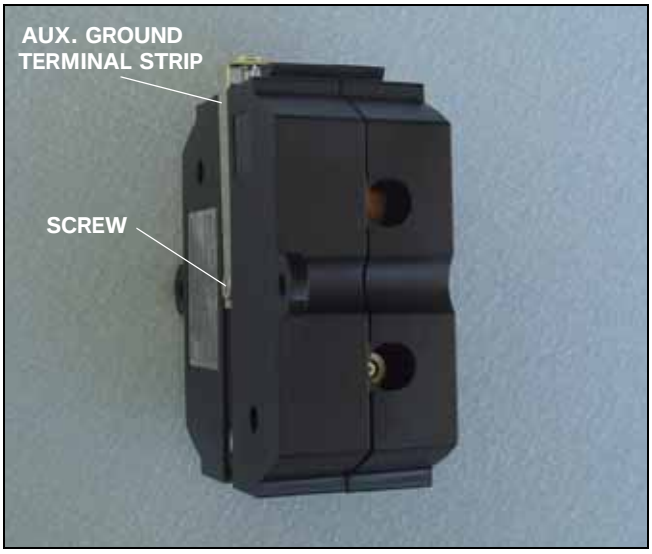

Figure 27. Auxiliary Ground Strip Mounted to the SurgeTel.

Step 2: Secure the SurgeTel to an acceptable mounting surface near the ATS using the screws supplied.

Step 3: Connect the supplied ground wire to the auxiliary ground strip using the screw provided.

Step 4: Turn the utility (Source 1) power off and turn the generator (Source 2) control selector switch to the "OFF" position before attempting to connect the ground wire to the ATS.

Step 5: Route the ground wire into the ATS to the ground bar. Secure the ground TVSS wire to a receptacle on the ground bar using a blade screwdriver.

Step 6: Apply utility (Source 1) power and place the generator control selector switch in the "AUTO" position.

1.4.3 Connecting the Phone Lines to the SurgeTel

Step 1: Route the telephone service wire(s) to the SurgeTel.

Step 2: Remove the cover from the SurgeTel.

Step 3: Connect the telephone service wires to the SurgeTel connectors.

Note: See the Instruction Bulletin supplied with the SurgeTel for complete telephone wire connection information.

Step 4: Check for a dial tone on a telephone connected to the system.

Step 5: Place and outgoing call and have someone call you back to ensure that the system is working.

1.5 SurgeCable Installation

Note: The Eaton SurgeCable is designed to mount directly to the TVSS when it is externally mounted to the ATS enclosure (see Figure 28). If the TVSS was installed inside the 100 A or 200 A SE ATS enclosure, the SurgeTel MUST BE mounted outside the enclosure (see Figure 29). See the Instruction Bulletin supplied with the SurgeTel for additional information.

Figure 28. SurgeCable Installed on the Externally Mounted TVSS.

Figure 29. SurgeCable Mounted Externally When the TVSS Is Internally Mounted in a SE ATS.

1.5.1 Attaching the SurgeCable to an Externally Mounted TVSS

Step 1: Align the quick connector with the receptacle on the right side, left side, or bottom of the TVSS. Slide the SurgeCable into the receptacle until completely seated (see Figure 30).

Note: If the SurgeCable will be mounted to the TVSS, no ground wire is required between the SurgeCable and ATS. The TVSS ground will also ground the SurgeCable.

Note: The SurgeCable can also be mounted to other Eaton surge protection devices that incorporate the quick connect feature.

Figure 30. SurgeCable Mounted to the TVSS.

1.5.2 Mounting the SurgeCable with an Internally Mounted TVSS

Figure 31. SurgeCable Installed Separate from the TVSS.

Step 1: Remove the screw in the middle of the back of the new SurgeCable using a Phillips head screwdriver. Attach the auxiliary ground terminal strip provided to the back of the SurgeCable using the Phillips head screw just removed (see Figure 32).

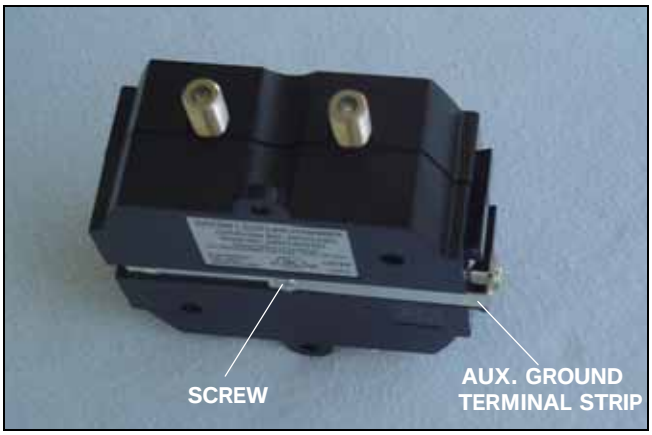

Figure 32. Auxiliary Ground Strip Mounted to the SurgeCable.

Step 2: Secure the SurgeCable to an acceptable mounting surface near the ATS using the screws supplied.

Step 3: Connect the supplied ground wire to the auxiliary ground strip using the screw provided.

Step 4: Turn the utility (Source 1) power off and turn the generator (Source 2) control selector switch to the "OFF" position before attempting to connect the ground wire to the ATS.

Step 5: Route the ground wire into the ATS to the ground bar. Secure the ground TVSS wire to a receptacle on the ground bar using a blade screwdriver.

Step 6: Apply utility (Source 1) power and place the generator control selector switch in the "AUTO" position.

1.5.3 Connecting the Cables to the SurgeCable

Step 1: Reroute the coaxial cables to the SurgeCable.

Step 2: Connect the coaxial cables to the applicable "In" and "Out" terminals on the SurgeCable.

Note: See the Instruction Bulletin supplied with the SurgeCable for additional connection information.

Step 3: After ensuring that all connections are tight, turn on the protected equipment and check for proper functioning.

1.6 Wiring Diagrams

Figures 33, 34, and 35 present overall wiring diagrams for RLCM/CHGENLC, RLCU, and CHGEN ATSs with TVSS installed.

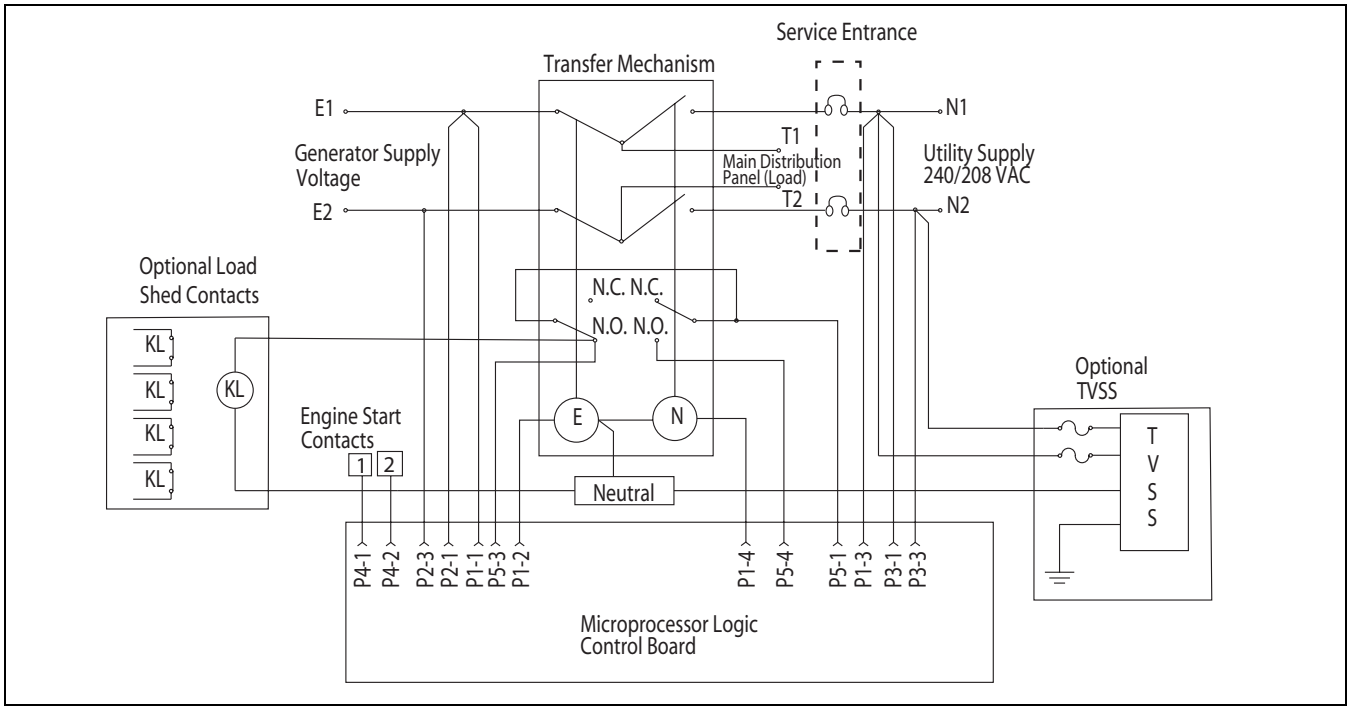

Figure 33. Wiring Diagram for TVSS Installed in a RLCM/CHGENLC ATS.

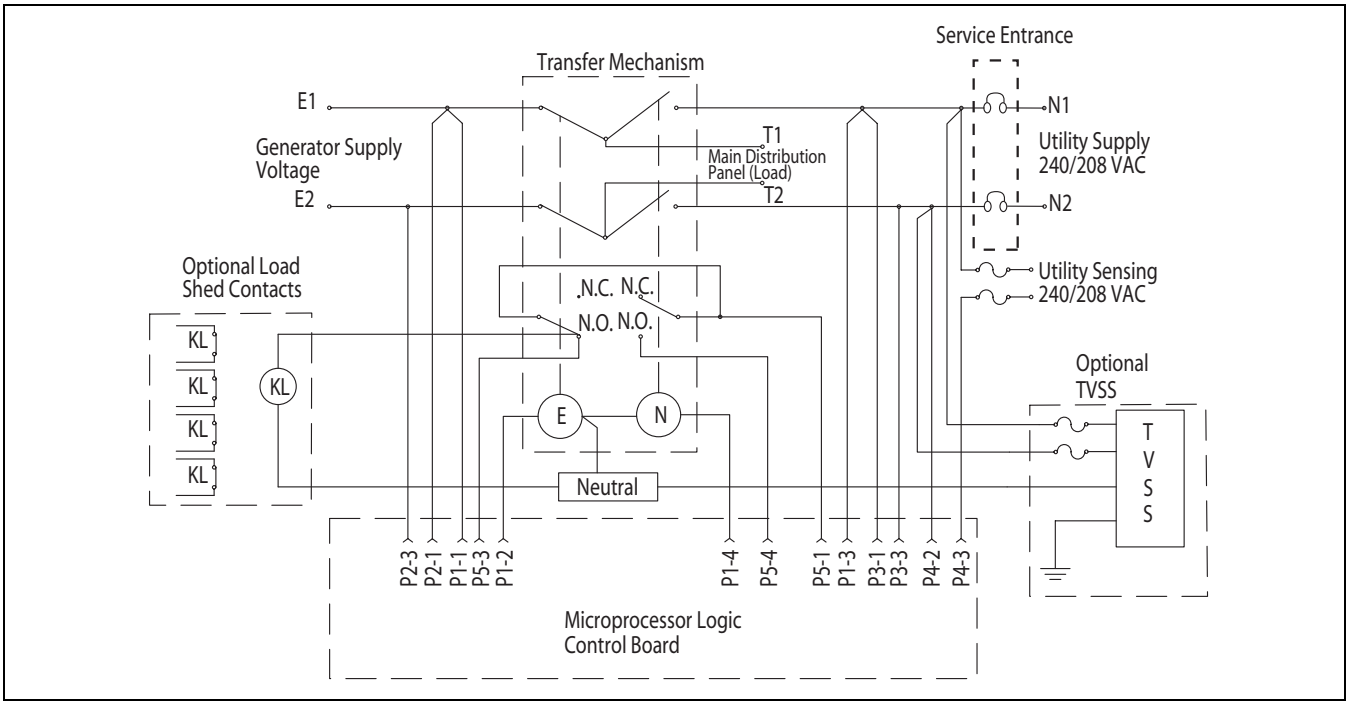

Figure 34. Wiring Diagram for TVSS Installed in a RLCU ATS.

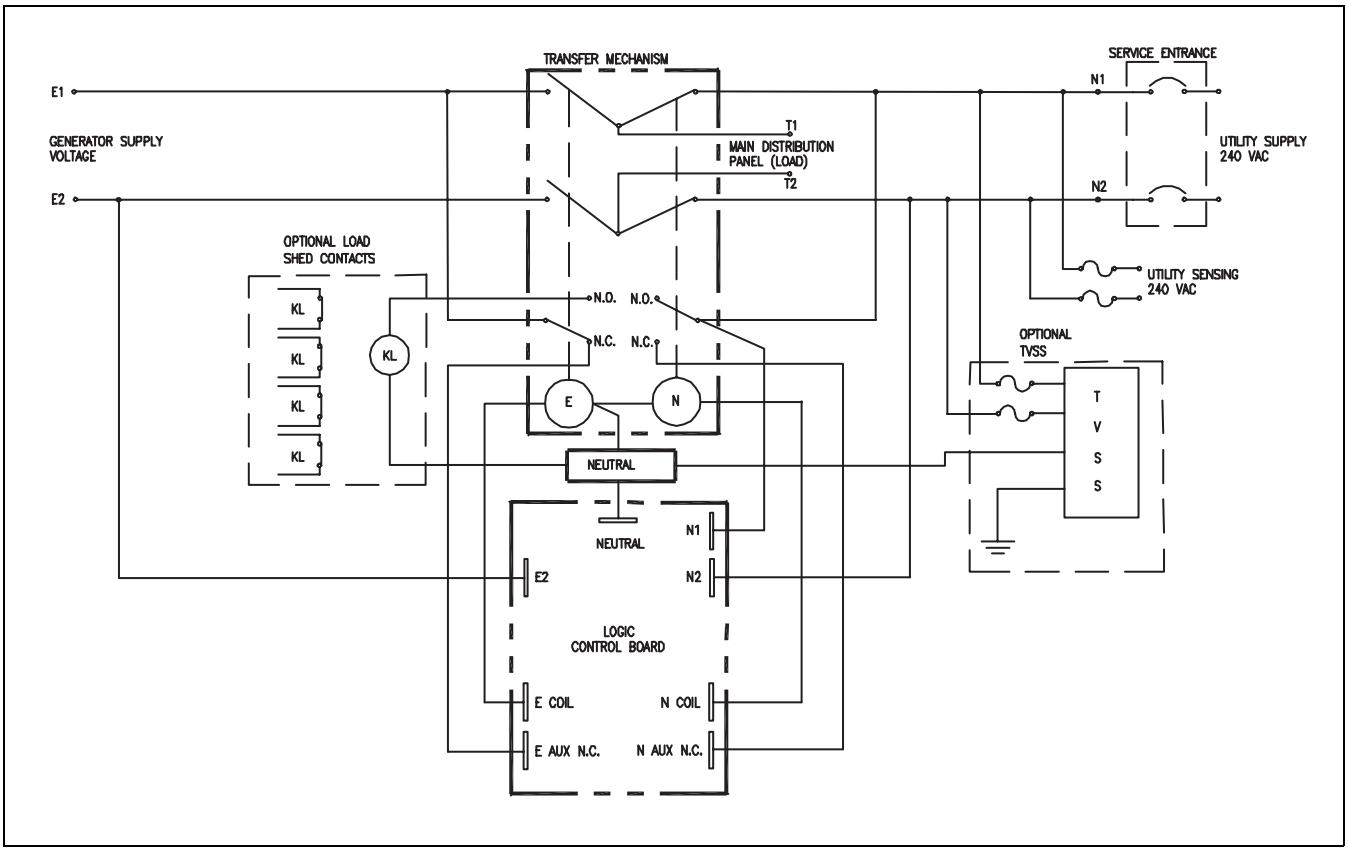

Figure 35. Wiring Diagram for TVSS Installed in a CHGEN ATS.

This instruction booklet is published solely for information purposes and should not be considered all-inclusive. If further information is required, you should consult an authorized Eaton sales representative.

The sale of the product shown in this literature is subject to the terms and conditions outlined in appropriate Eaton selling policies or other contractual agreement between the parties. This literature is not intended to and does not enlarge or add to any such contract. The sole source governing the rights and remedies of any purchaser of this equipment is the contract between the purchaser and Eaton.

NO WARRANTIES, EXPRESSED OR IMPLIED, INCLUDING WARRANTIES OF FITNESS FOR A PARTICULAR PURPOSE OR MERCHANTABILITY, OR WARRANTIES ARISING FROM COURSE OF DEALING OR USAGE OF TRADE, ARE MADE REGARDING THE INFORMATION, RECOMMENDATIONS, AND DESCRIPTIONS CONTAINED HEREIN. In no event will Eaton be responsible to the purchaser or user in contract, in tort (including negligence), strict liability or otherwise for any special, indirect, incidental or consequential damage or loss whatsoever, including but not limited to damage or loss of use of equipment, plant or power system, cost of capital, loss of power, additional expenses in the use of existing power facilities, or claims against the purchaser or user by its customers resulting from the use of the information, recommendations and description contained herein.

Eaton Electrical
1000 Cherrington Parkway
Moon Township, PA 15108-4312
USA
tel: 1-800-525-2000
www.eatonelectrical.com

© 2005 Eaton Corporation
All Rights Reserved
Printed in USA
Publication No. IL01602010E/TBG00090
February 2005

EATON | Cutler-Hammer