EATON | Cutler-Hammer

Non-Automatic Transfer Switch
Quick Start Instructions

Instruction Leaflet
Effective June 2003

WARNING

THIS INSTRUCTION LEAFLET IS NOT A COMPLETE SOURCE OF INFORMATION ON THE TRANSFER EQUIPMENT. INSTALLATION SHOULD NOT BE STARTED UNTIL THE ENTIRE INSTRUCTION BOOK HAS BEEN REVIEWED AND UNDERSTOOD. FAILURE TO FOLLOW INSTRUCTIONS CAN RESULT IN DEATH, SEVERE PERSONAL INJURY OR PROPERTY DAMAGE.

Step 1: Mount the transfer switch on a flat rigid surface (Figure **1**). Shim if necessary. For seismic mounting requirements, check the instruction book.

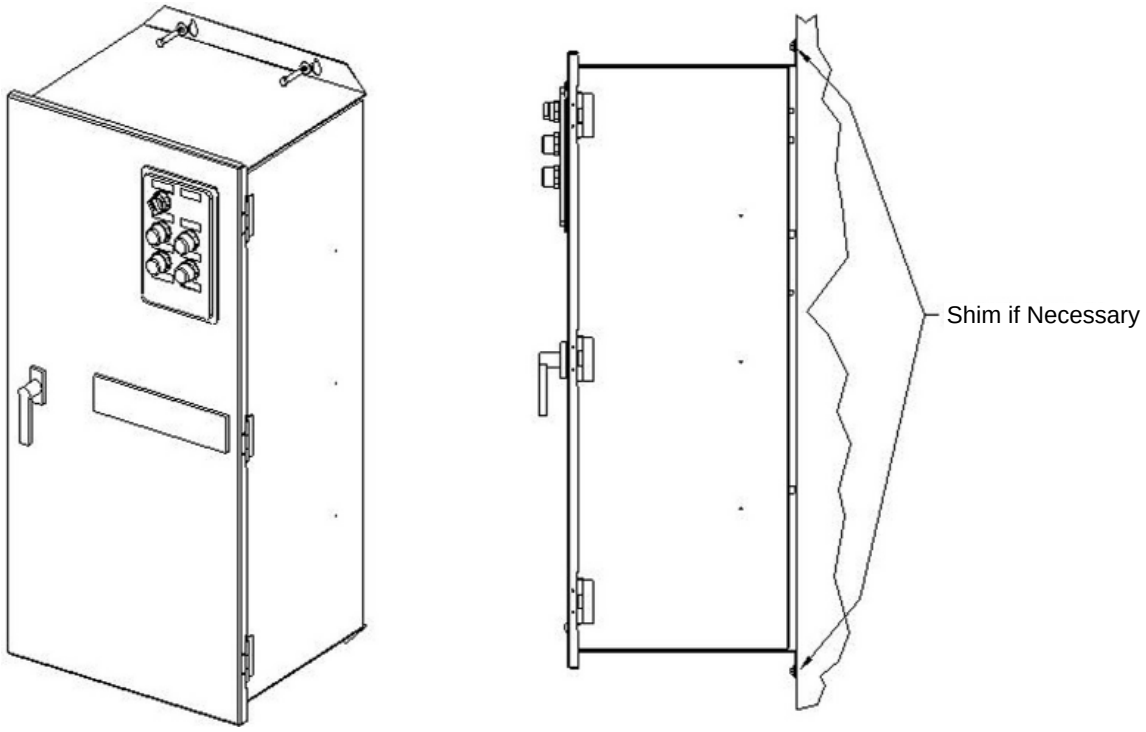

Figure 1 Mounting Details

Step 2: Install power cables. Cables shall be sized and installed per National Electrical Code, refer to NFPA70. The cable must be sized within the specified cable size range on the side of the cable connectors.

Connect cables and torque to correct value indicated on the label near the lugs in the following order: [1] Load Cables***** (T1, T2, T3), [2] Source 1 or Utility Supply (N1, N2, N3), [3] Source 2 or Generator Supply (E1, E2, E3).

For 4 pole transfer switches, connect load cables (T4), Source 1 or utility supply (N4), and Source 2 or generator supply (E4). Refer to Figure **2** for the location of all parts discussed in this document.

****** *Load cables on switches using the vertical design MUST be connected and torqued BEFORE installing the SUPPLY cables (Figures **3** and **4**).*

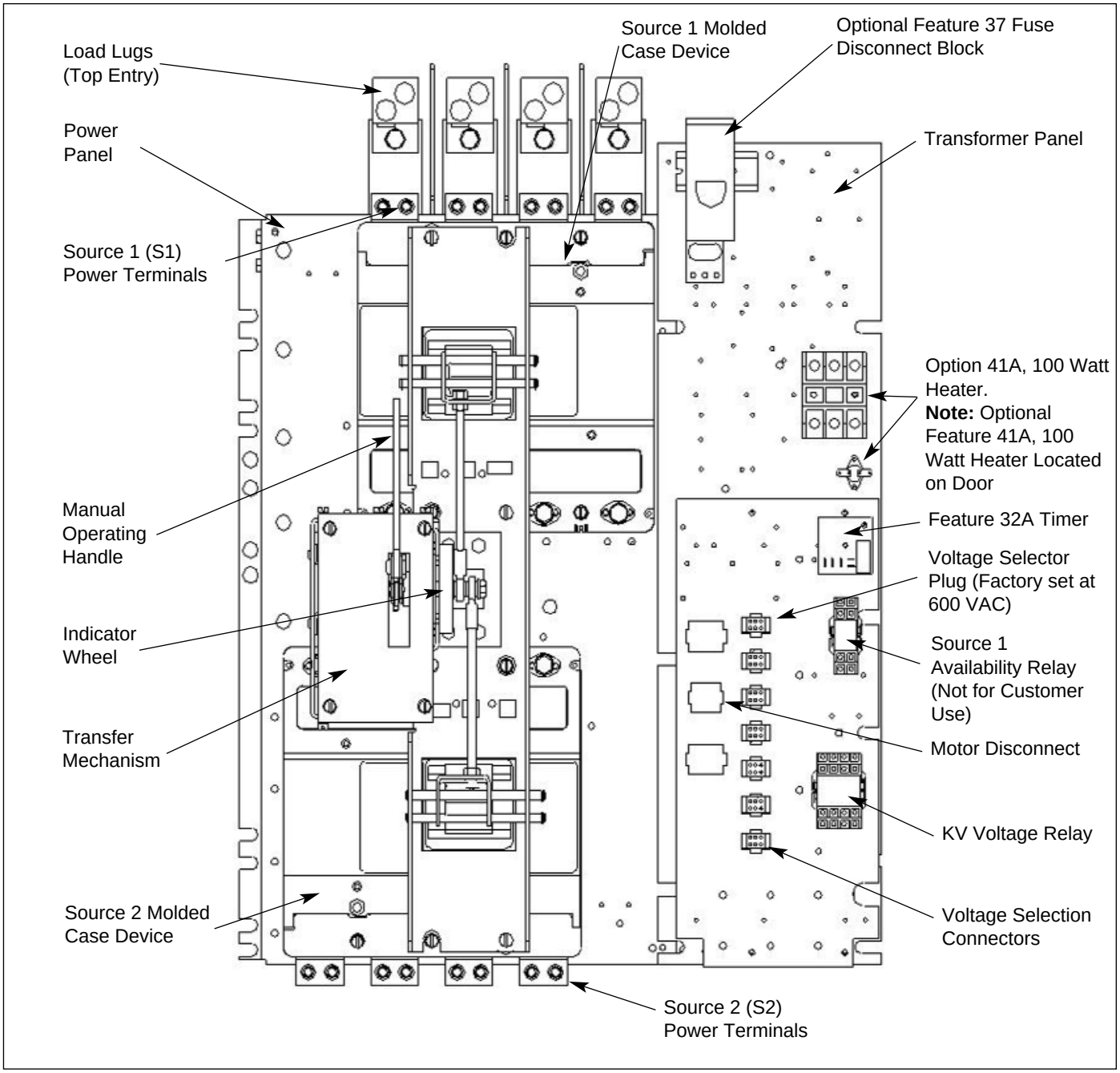

Figure 2 400A, 4 Pole, Non-Automatic Transfer Switch Interior

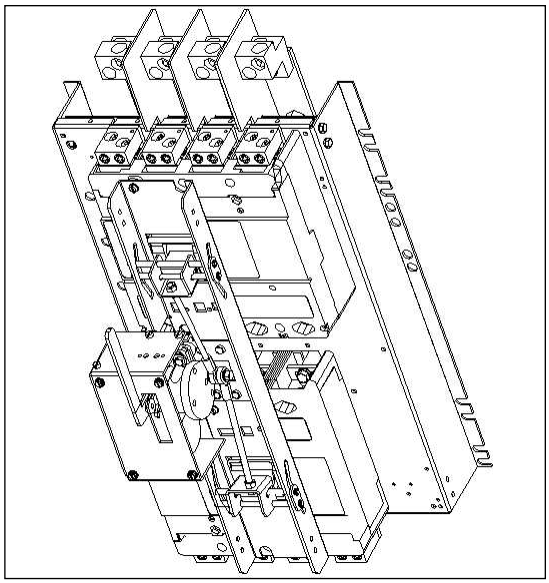

Figure 3 Vertical Power Panel

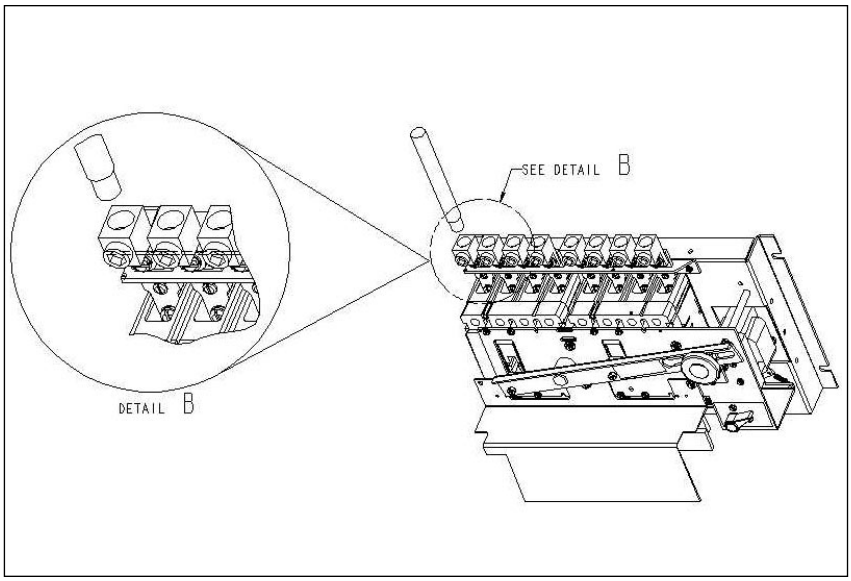

Figure 4 Horizontal Power Panel

Step 3: The Voltage Selector Plug is shipped in the 600Vac position. Move the Selector Plug to the appropriate position prior to energizing the switch. Make sure the selector switch, on the Device Panel, is in the "Source 1" position. Apply Utility (Source 1) Power. If the switch is properly applied for the system voltage selected, the *"Source 1" Available Light,* and *"Source 1" Connected Light* should illuminate (Figure **5**). Using a voltmeter, check for proper system voltage on the normal and load terminals. Check all phases on a three-phase switch. Voltage measurements should be taken phase to phase and phase to neutral.

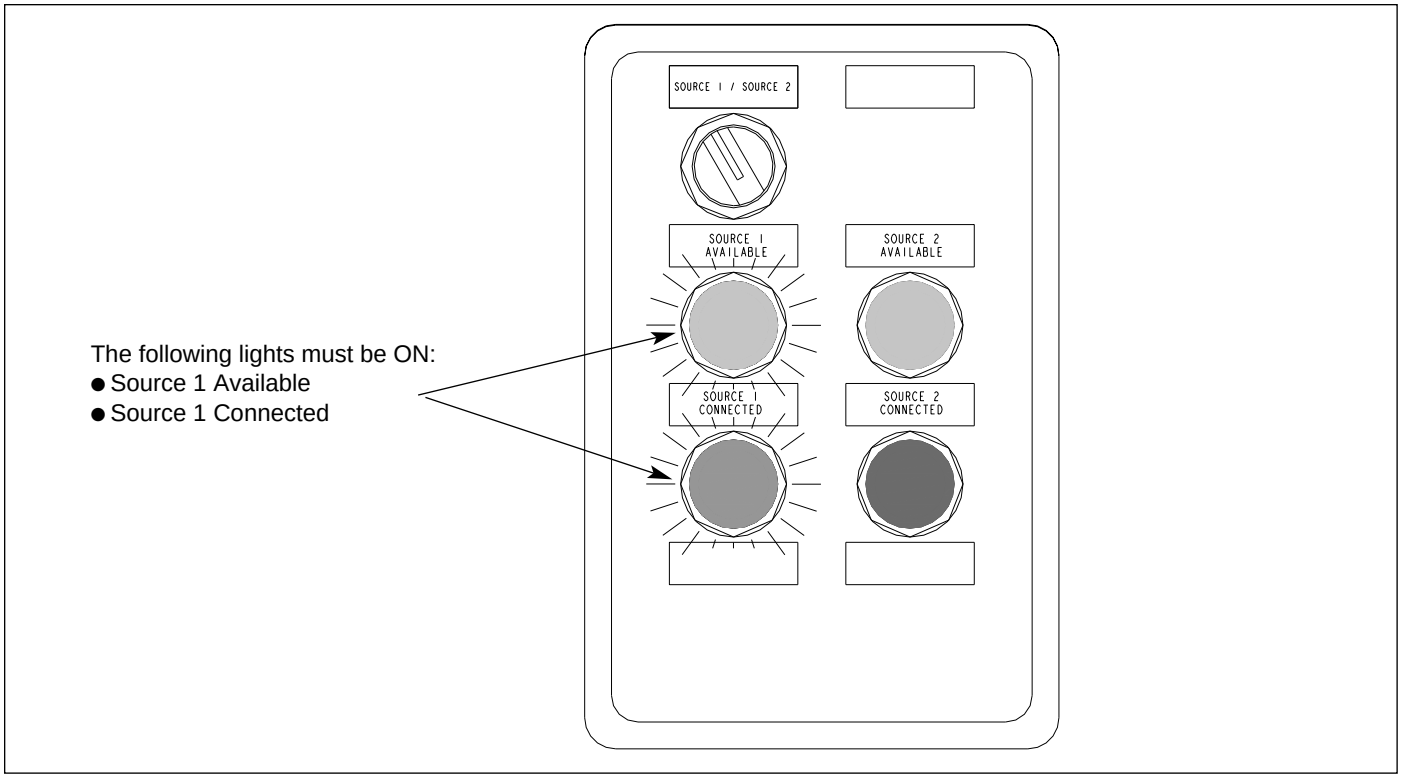

Figure 5 Non-Automatic Device Panel

Step 4: Manually start the engine generator at the generator controller. Check that the *Source 2 Available* light is lit (Figure **6**). Check all Voltages phase to phase and phase to neutral.

Note: The transfer switch is equipped with a time delay feature when in the Neutral position. This feature provides a delayed transition transfer mode for an Open Transition Transfer Switch. Often used in systems with inductive loads, a delayed transition transfer switch may prevent or reduce excessive inrush currents due to out of phase switching of loads. This switch provides a time delay in the Neutral position during the transfer and re-transfer operations in which both Source 1 and Source 2 are disconnected from the load circuit. The time delay is adjustable and is the same for both transfer and re-transfer operations. The range is from 3-60 seconds.

Step 5: Move the Selector Switch, on the Device Panel, to Source 2 (Figure **7**). The Transfer Switch will move to the Neutral Position, delay, and then move to the Source 2 position. Check the *Source 1 Connected* light and make sure it is extinguished. Check that the *Source 2 Connected* light is illuminated. Return the Selector Switch to Source 1. Make sure the Transfer Switch returns to *Source 1* and the *Source 1 Connected* light illuminates (Figure **6**). Shut down the Generator after the manufacturer's recommended cool down time.

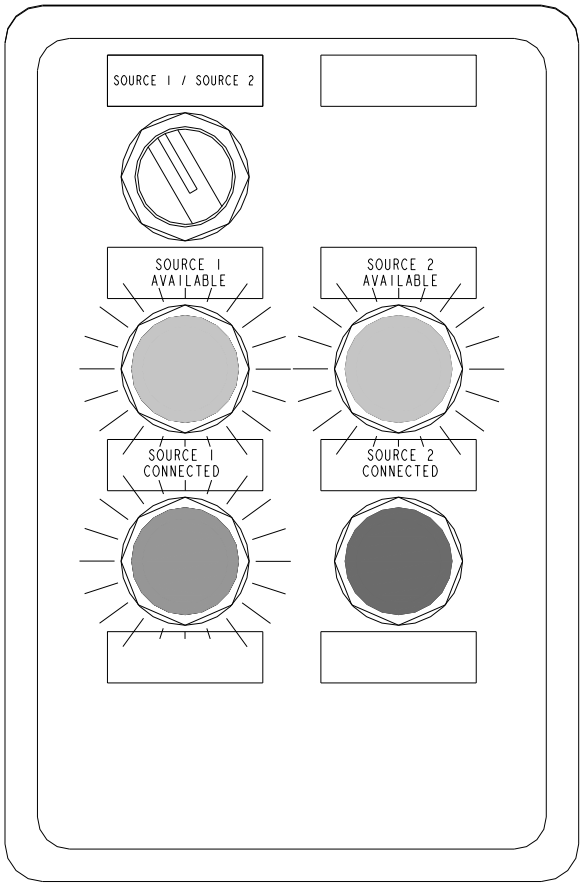

The following lights should be ON:

- Source 1 Available
- Source 1 Connected
- Source 2 Available

Figure 6 Utility Supplying Load and Generator Running

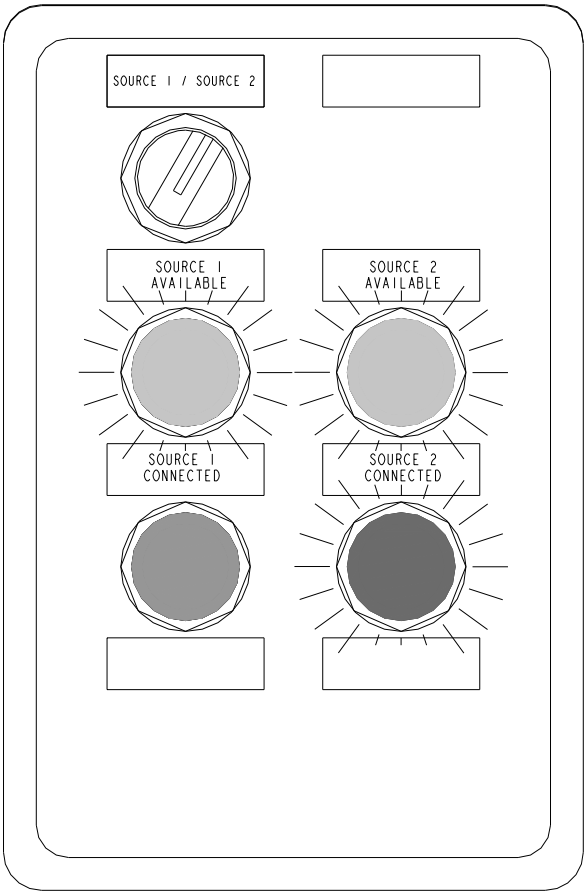

The following lights should be ON:

- Source 1 Available
- Source 2 Available
- Source 2 Connected

Figure 7 Generator Supplying Load

This Transfer Switch may be equipped with a two position Keyed Selector Switch that may be used as a "Service Disconnect" (Figure **8**) or as a "Disconnect" (Figure **9**). If this Transfer Switch does have the two position Keyed Selector Switch, refer to IL01602002E for proper labeling.

Operation of the Two Position Keyed Selector Switch:

Operation 1: When the keyed Selector Switch is in the "Energize" position, the Transfer Switch functions normally when the Source 1/Source 2 Selector Switch is used (Figure **8** and Figure **9**).

Operation 2: To disconnect power from the Load: Turn the Keyed Selector Switch to the "Disconnect" position (Figure **10** and Figure **11**), then remove the key. The Transfer Switch will move to the neutral position and remain there until the Keyed Selector Switch is returned to the "Energized" position.

Operation 3: To reconnect power to the Load: Reinsert the key and turn the Keyed Selector Switch to the "Energize" position (Figure **8** and Figure **9**). The Transfer Switch will move to the position indicated by the Source 1/Source 2 Selector Switch.

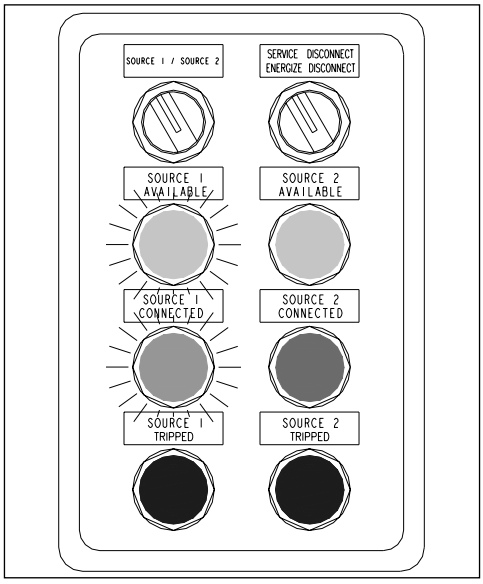

Figure 8 Service Disconnect Energized

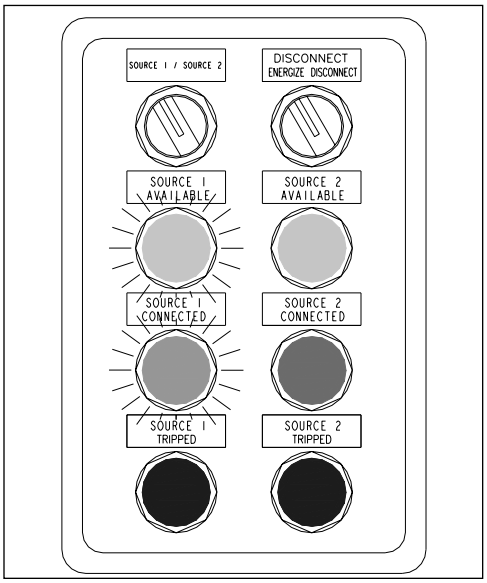

Figure 9 Disconnect Energized

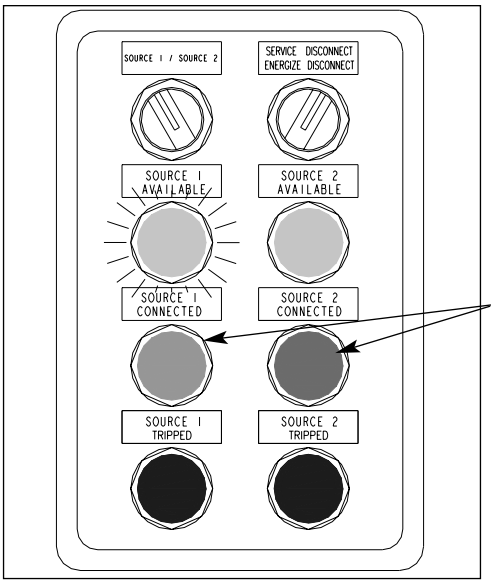

Figure 10 Service Disconnect Disconnected

Disconnected Position Indicated by Both Connected Lights being Extinguished

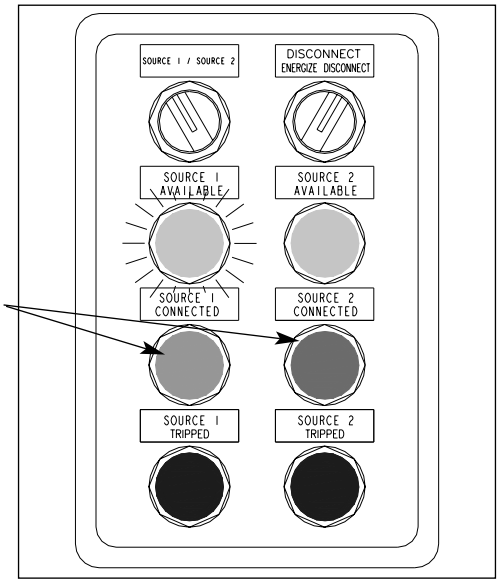

Figure 11 Disconnect Disconnected

Eaton Corporation
Cutler-Hammer business unit
1000 Cherrington Parkway
Moon Township, PA 15108-4312
USA
tel: 1-800-525-2000
www.cutler-hammer.eaton.com

© 2003 Eaton Corporation
All Rights Reserved
Printed in USA
Publication No. IM01602002E (ISI)
June 2003