Unmatched performance for critical power needs

Drawout bypass isolation

Eaton's automatic transfer switch is designed to provide unmatched performance, reliability and versatility for critical standby power applications. The switches can be equipped with the ATC-300+ or ATC-800 controllers to match your application needs. A bypass isolation transfer switch may be used to provide emergency power to life safety and other critical loads where maintenance of the main transfer switch, without interruption of power to the load, is either desirable or required.

Electrical ratings

- Operating temperature –20° to +70°C (–4° to +158°F)
- Ratings 100, 150, 225, 260, 400, 600, 800, 1000, 1200 and 1600A
- Two-, three- or four-pole (fourth pole is fully rated)
- Up to 600 Vac, 50/60 Hz
- NEMA® 1, 3R, 12, 4X
- UL® 1008 Listed
- CSA® C22.2 No. 178 Certified

Industrial design highlights

- Standard front access on all ratings
- Entry:
  - Top, bottom or both
  - Isolated compartments
- Field-selectable multi-tap transformer panel permits operation on a wide range of system voltages
- Improved safety:
  - Isolated compartments with barriers
  - Single motion rack-out with doors closed
  - Ability to test power-switching elements during drawout process
- Dual ATS capability—bypass contactor can be controlled by the ATS controller in the bypass mode of operation
- Installation flexibility:
  - Field entry/exit locations can be modified in the field
  - Interchangeable drawout contactors

Standard features

- Drawout cassette design on both ATS and bypass
- No service interruption in bypass to the same source
- Source available contacts:
  - Source 1 present 2NO and 2NC
  - Source 2 present 2NO and 2NC
- Switch position contacts:
  - Source 1 position 1NO and 1NC
  - Source 2 position 1NO and 1NC
- Source 1 and Source 2 sensing:
  - Undervoltage/ underfrequency
  - Overvoltage/overfrequency
  - Three-phase rotation protection ❶❷
  - Three-phase voltage unbalance/loss ❶❷
- Pre-transfer signal contacts 1NO and 1NC
- Go to Source 2 (EMERGENCY)

❶ ATC-300+ only.

❷ Optional with ATC-800, standard with ATC-300+.

- Field-programmable time delays:
  - Time delay engine start: 0–1200 seconds
  - Time delay normal to emergency: 0–1800 seconds
  - Time delay emergency to normal: 0–1800 seconds
  - Time delay engine cooldown: 0–1800 seconds
  - Time delay emergency failure: 0–6 seconds
- LCD-based display for programming, system diagnostics and Help Menu
- Mimic diagram with source available and connected LED indication
- Time-stamped history log
- System TEST pushbutton
- Programmable plant exerciser—OFF, daily, 7-, 14- ❶, 28-day ❶ interval selectable run time 0–600 minutes no load/load with fail-safe

Optional features

- Available UL 1449 3rd Edition surge protection device (SPD)
- Automatic transfer operation with selectable (via programming) non-automatic or automatic retransfer with fail-safe
- Space heater with thermostat
- Digital multi-function power quality metering
- Remote annunciator with control
- Modbus® RTU communications (ATC-300+ / ATC-800 controller)
- Ethernet TCP/IP communications
- Stainless steel cover for controller
- Load sequencing contacts
- Load shed contacts

Powering Business Worldwide

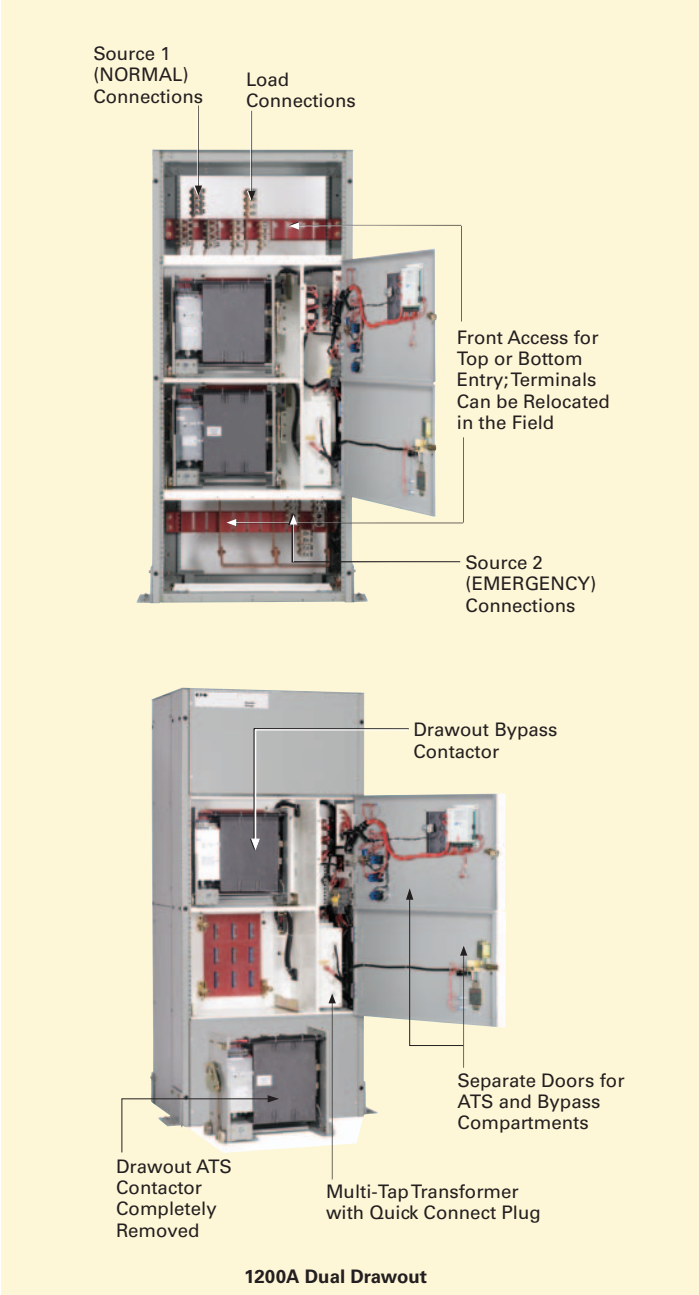

1200A Dual Drawout

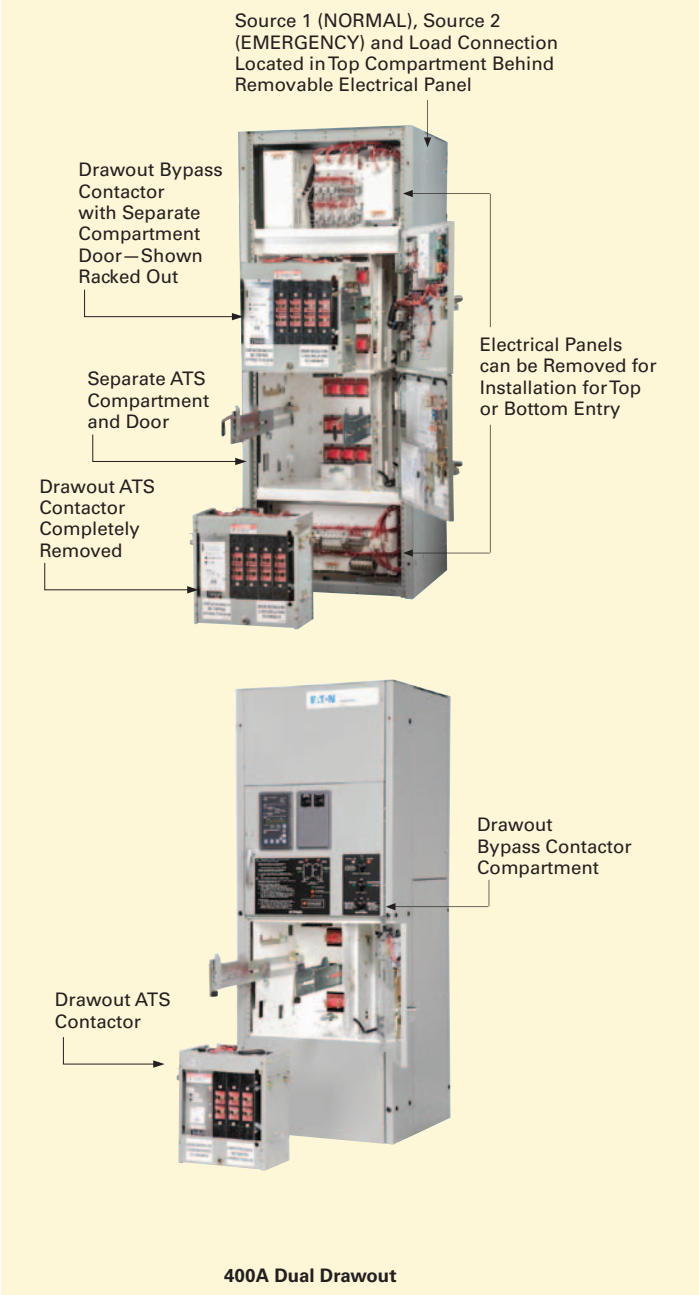

400A Dual Drawout

Bypass isolation switch features

Front access

Front access is a standard feature. Source 1 (NORMAL) and Load connections are set up as standard top entry and Source 2 (EMERGENCY) connections as bottom entry. These connections are located in their own separate compartments. These connections can be relocated in the field if necessary.

Multi-tap transformer

The industry-exclusive multi-tap system voltage selector allows the transfer switch to be applied on most system voltages by proper insertion of the selector plug.

Dual drawout ATS and bypass contactor

The ATS and the bypass drawout power contactor designs are identical and interchangeable. This standard feature allows the user the ability to withdraw, maintain or swap contactor assemblies, providing redundancy of ATS and bypass functions from one contactor assembly to the other of a similar frame size.

Improved safety

The unique Eaton design includes separation between control and power components. The ATS and bypass isolation contactors are mounted in separate compartments with protective barriers between them. This design prevents the possibility of contact with the rear-mounted power connections to the contactors. In addition, the top and bottom entries have separate compartment doors.

Ease of maintenance

Transfer to the bypass power contactor is easily initiated and controlled via door-mounted controls. Once the transfer to the bypass contactor is complete, the ATS contactor is easily racked out with the compartment door closed. The ATS contactor may then be tested in the racked-out position.

Ease of transfer

The Eaton design allows the operator to make a quick and simple transfer from the ATS power contactor to the bypass contactor by initiating the electrically operated transfer via a two-position switch. Door-mounted indicating lights confirm that a successful transfer has taken place.

Dual ATS capability

The controller on conventional bypass isolation switches only controls the ATS contactor. The Eaton design allows the switch controller to remain active in both the ATS and the bypass modes, thus providing control to either contactor.

This ability of the controller to remain active and control the bypass isolation contactor provides "N+1" redundancy of a second fully functioning ATS, a feature unique to Eaton.

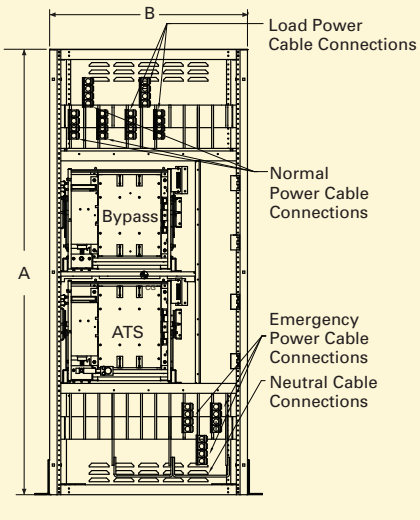

Front View

Side View (With Right Side Removed)

600–1600A 480V or 225–1200A 600V Dual Drawout Bypass NEMA 1

Note: Source 1 Normal and Load connections are top and Source 2 is bottom. These connections can be relocated in the field.

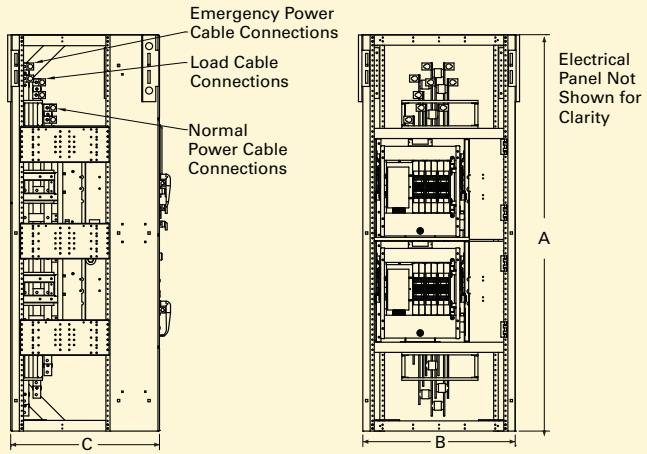

Side View (With Left Side Removed)

Front View

100–400A 480V or 100–200A 600V Dual Drawout Bypass NEMA 1

Contactor-Based Transfer Switch 100–1600A—NEMA 1 in Inches (mm) and Approximate Shipping Weight

	Enclosure Seismic ❶			Standard Terminals			
Switch Rating Amperes/Volts ❷	A	B	C	Normal, Emergency and Load	Neutral	Metric Conversion (mm^2) ❸	Weight Lbs (kg)
100–200A 480V ❹	78.07 (1983.0)	30.00 (762.0)	29.30 (744.2)	(1) #6–350 Cu/Al	(3) #6–350 Cu/Al	13–177 mm^2 Cu/Al	625 (283.8)
100–200A 600V ❹	78.07 (1983.0)	30.00 (762.0)	29.30 (744.2)	(1) #6–350 Cu/Al	(3) #6–350 Cu/Al	13–177 mm^2 Cu/Al	625 (283.8)
225–400A 480V ❹	78.07 (1983.0)	30.00 (762.0)	29.30 (744.2)	(1) 3/0–600 Cu/Al	(3) 3/0–600 Cu/Al	85–304 mm^2 Cu/Al	625 (283.8)
225–400A 600V ❺	90.00 (2286.0)	40.00 (1016.0)	28.97 (735.8)	(2) 3/0–750 Cu/Al	(6) 3/0–750 Cu/Al	85–380 mm^2 Cu/Al	1750 (794.5)
600A 480V ❺	90.00 (2286.0)	40.00 (1016.0)	28.97 (735.8)	(2) 3/0–750 Cu/Al	(6) 3/0–750 Cu/Al	85–380 mm^2 Cu/Al	1750 (794.5)
600A 600V ❺	90.00 (2286.0)	40.00 (1016.0)	28.97 (735.8)	(2) 3/0–750 Cu/Al	(6) 3/0–750 Cu/Al	85–380 mm^2 Cu/Al	1750 (794.5)
800–1200A 480V ❺	90.00 (2286.0)	40.00 (1016.0)	28.97 (735.8)	(4) 3/0–750 Cu/Al	(12) 3/0–750 Cu/Al	85–380 mm^2 Cu/Al	1850 (839.9)
800–1200A 600V ❺	90.00 (2286.0)	40.00 (1016.0)	28.97 (735.8)	(4) 3/0–750 Cu/Al	(12) 3/0–750 Cu/Al	85–380 mm^2 Cu/Al	1850 (839.9)
1600A 480V ❺	90.00 (2286.0)	40.00 (1016.0)	40.00 (1016.0)	(4) 3/0–750 Cu/Al	(12) 3/0–750 Cu/Al	85–380 mm^2 Cu/Al	2200 (997.9)

❶ For seismic applications, it is necessary to use 5–13 UNC Grade or better hex head bolts and washers torqued to 50 lbs-ft.

❷ NEMA 12 and 4X dimensions are 90.00 inches H x 46.00 inches W x 38.00 inches D (2286.0 mm H x 1168.4 mm W x 965.2 mm D). NEMA 4X enclosures are 304SS standard with an optional upgrade to 316SS.

❸ Same number of terminals per phase will be supplied.

❹ For NEMA 3R dimensions, add 18.29 inches (464.6 mm).

❺ For NEMA 3R dimensions, add 18.59 inches (472.2 mm).

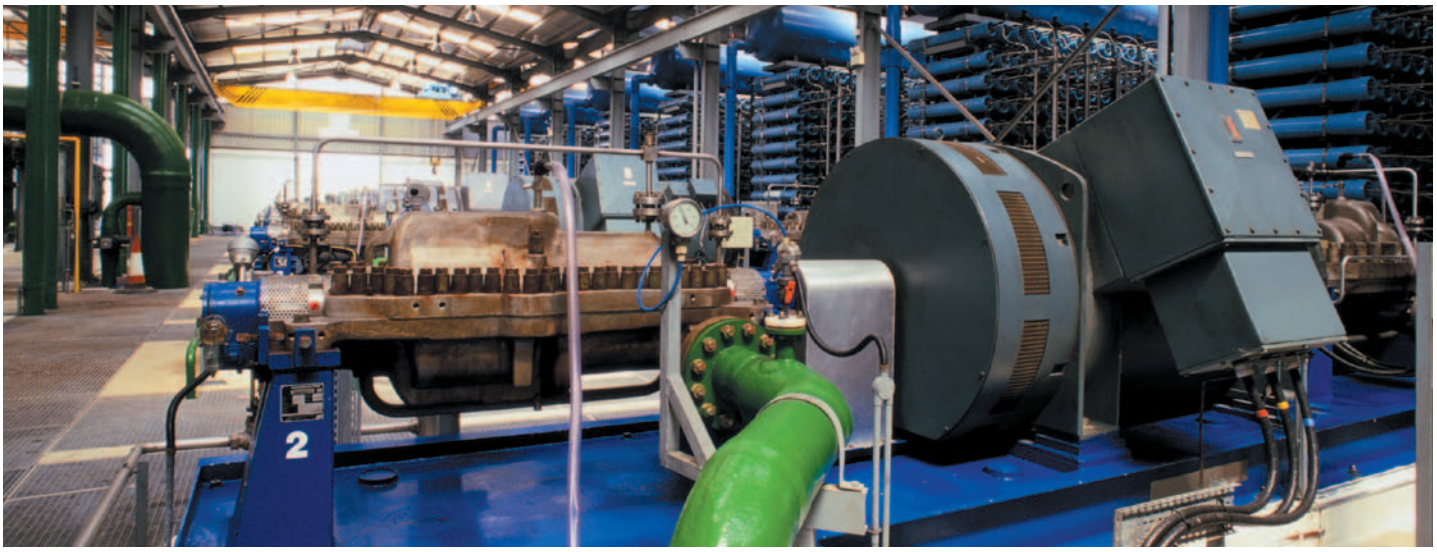

Automatic Bypass Isolation Contactor-Based Transfer Switch Catalog Numbering System

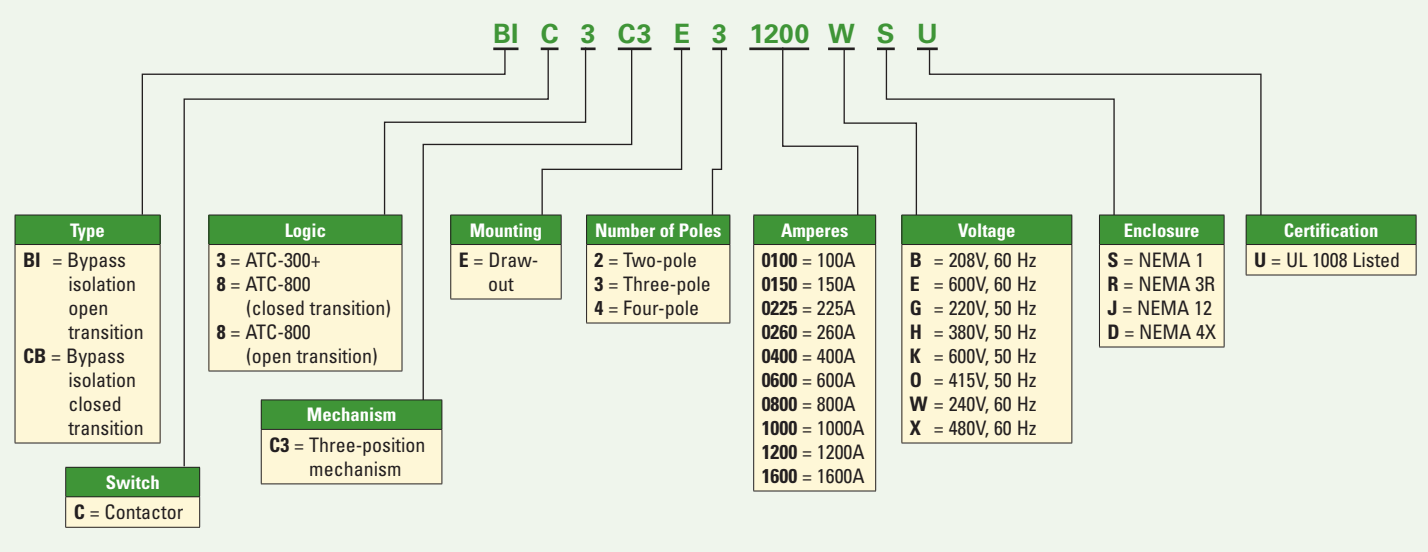

Note: 1600A is rated for 480V and below.

Bypass Isolation Diagram

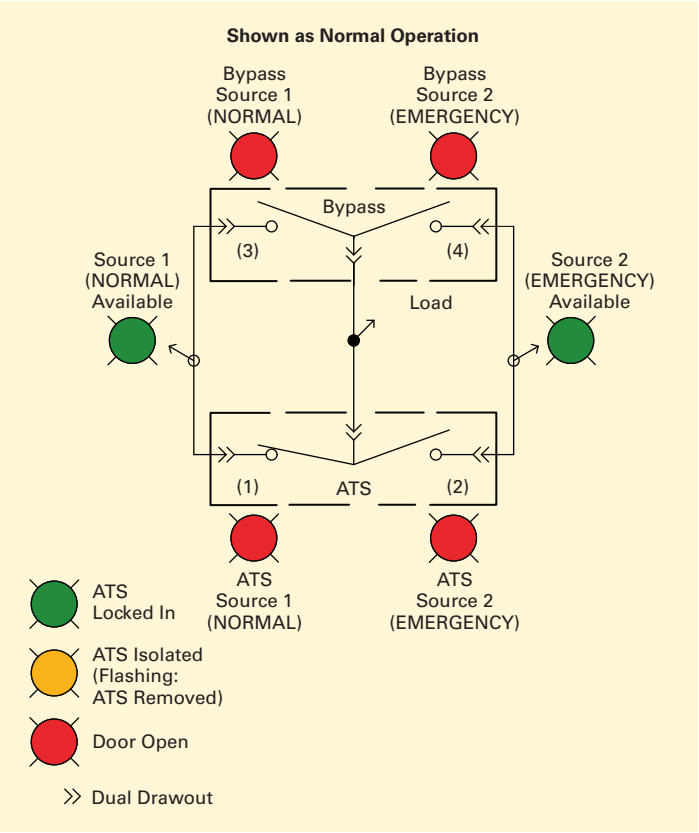

UL 1008 Withstand and Close-On Ratings (kA)

UL 1008 Rating (A)	480 Volts		600 Volts		Rating When Used with Upstream Fuse			
	Any Breaker	Specific Breaker	Any Breaker	Specific Breaker	Rating	Test Voltage	Fuse Type	Max. Fuse Amps
100	30	50	22	35	200	600	RK5	600
150	30	50	22	35	200	600	RK5	600
200	30	50	22	35	200	600	RK5	600
225	30	50	42	65	200	600	RK5	600
260	30	50	42	65	200	600	RK5	600
400	30	50	42	65	200	600	RK5	600
600	50	65	42	65	200	600	L	1200
800	50	65	42	65	200	600	L	1200
1000	50	65	42	65	200	600	L	1600
1200	50	65	42	65	200	600	L	1600
1600	50	65	N/A	N/A	—	—	—	—

Fully rated fourth pole (switched neutral)

Eaton provides a fully rated switched neutral or fourth pole, meaning that the fourth pole has withstand, interrupt and closing ratings identical to the power contacts. The neutral pole is operated on a common shaft with the power contacts, thereby ensuring simultaneous opening and closing of the switched neutral.

Eaton's fully rated fourth pole eliminates typical problems with a three-pole overlapping neutral:

- Eliminates nuisance ground trips at the main due to circulating zero sequence harmonic current between sources
- Reduction in ground current due to isolated single ground point lowers arc-flash levels and reduces generator damage
- Eliminates potential for faults to propagate across overlapping neutral; fully rated fourth pole will handle as a normal operation
- Does not generate voltages that exceed normal phase voltage

Note: For more detail, reference Eaton White Paper *Three- and Four-Pole Transfer Switching Characteristics*, IA08700002E.

Eaton
1000 Eaton Boulevard
Cleveland, OH 44122 USA
Eaton.com

© 2013 Eaton
All Rights Reserved

Printed in USA
Publication No. PA01602013E / Z13446
March 2013

Eaton is a registered trademark of Eaton Corporation.

All other trademarks are property of their respective owners.

Powering Business Worldwide