Pow-R-Command DIGITAL SWITCH
Input/Output Terminations

PRC Digital Switch

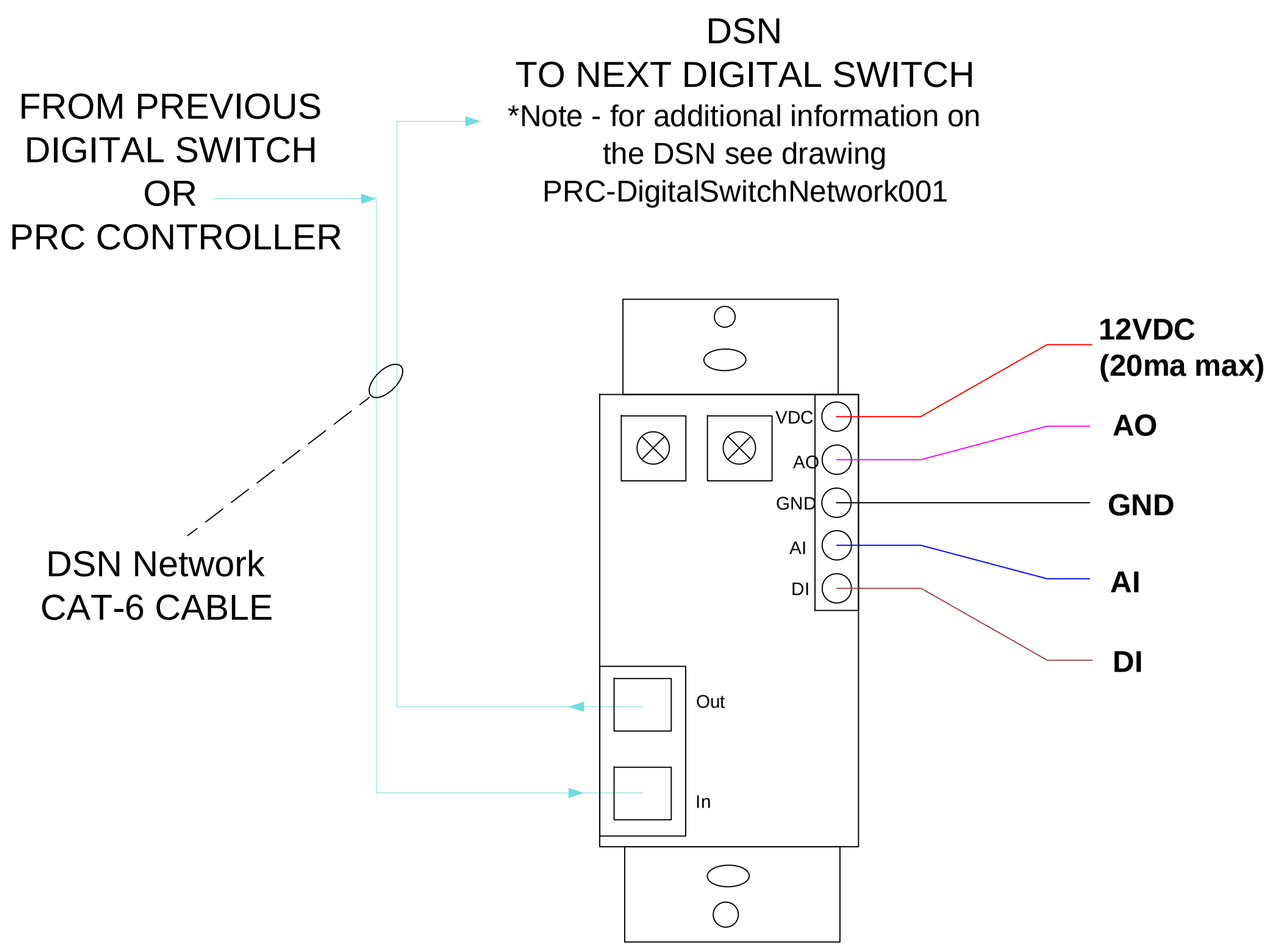

Digital Switch Input/Output		
Label	**Description**	**Notes**
VDC	12VDC Output for input Devices	Max 20ma
AO	Analog Output for 0 to 10 volt Dimming	Max 30 Ballasts or LED Drivers
GND	Common for DI, DO, AO and 12Vdc	
AI	Analog input	0 -10 Vdc
DI	Digital Input for dry-contact input	Input not included on 6-button switch.

Notes:
1. Maximum of 99 switches per Controller DSN Network
2. A PRC **DSN Power Injector** is needed after 15 Switches or 500' of CAT6 Cable, whichever comes first.
   Part number- 42C3969G01.
3. For additional information on the DSN see drawing PRC-DigitalSwitchNetwork001

I/O Devices

Dry-Contact Override Switch

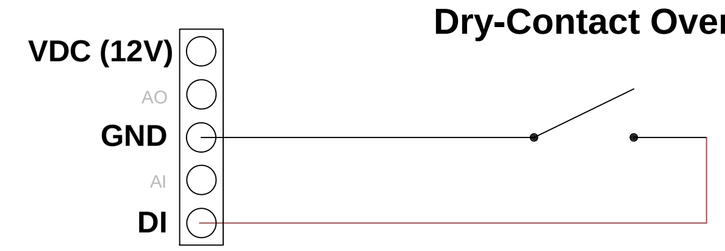

*Note not available in the 6-Button Version

Occupancy Sensor
w/ Dry-Contact Input

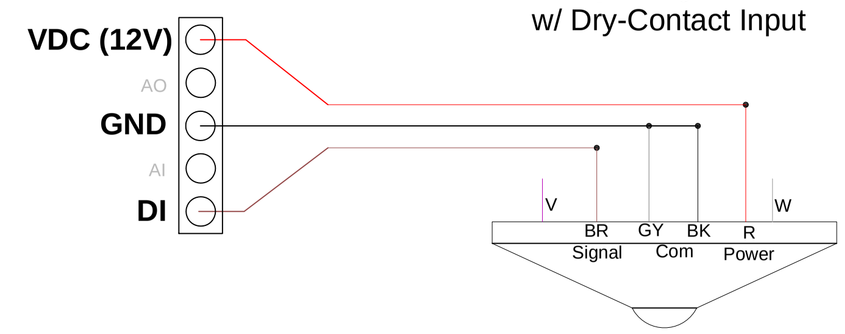

*Note not available in the 6-Button Version

Occupancy Sensor	
Part Number	Description
CM-9R	PIR Ceiling mount sensor with relay option
CM-10R	PIR Ceiling mount sensor ext range with relay option
CM-PDT-10R	PIR/MCR Dual Technology Ceiling mount with relay option

Photosensor
w/ 0 to 10V Signal Level

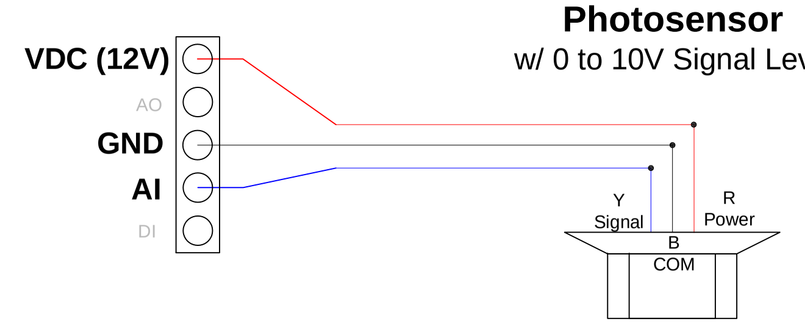

Photo Sensors	
Part Number	Description
42C3977G01	Indoor Sensor- 12V input, 0-10V output, 50 to 750 Fc
42C3977G02	Outdoor Sensor- 12V input, 0-10V output, 50 to 750 Fc
42C3977G03	Atrium Sensor- 12V input, 0-10V output, 50 to 750 Fc
42C3977G07	Skylight Sensor- 12V input, 0-10V output, 1000 to 7500 Fc

LED Drivers and Fluorescent Ballasts
0 to 10V Dimmable

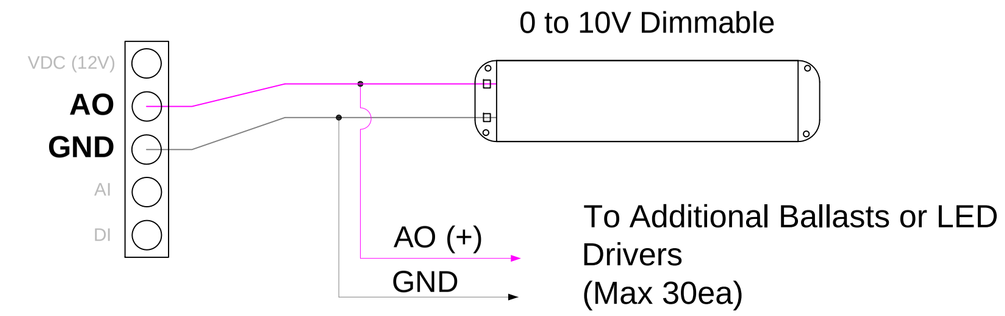

Compatible 0 -10V Dimming		
Product Line	**Vendor**	**Description**
Mark-7	Advance	0-10V Dimmable Ballast
Super-Dim	Universal	0-10V Dimmable Ballast
Hi-Lume	Lutron	0-10V Dimmable LED Driver (A-Series)
ThoroLED	Fulham	0-10V Dimmable LED Driver (TCD series)

Website www.eaton.com/lightingcontrol
Email lightingcontrol@eaton.com
Tech Support (888) 252-6286 Option#3

REVISION 0

Design Sketch
The information on this uncontrolled document is a reflection of design selections in a Configuration System. It may not be accurate for construction purposes.

THE INFORMATION ON THIS DOCUMENT WAS CREATED BY EATON CORPORATION. IT WAS DISCLOSED IN CONFIDENCE AND IS ONLY TO BE USED FOR THE PURPOSE IN WHICH IT WAS SUPPLIED.

DFTR BER	DATE 04/10/12	EATON	
APPD	DATE	TITLE Pow-R-Command Digital Switch I/O	
S.O.		TYPE	Wiring
FEDERAL ID NO. 88725	PRODUCT CODE LCBM	REVISION 0	G.O. / DWG PRC-DIGITALSWITCH-IO-001 / SHEET 1 OF 1