Pow-R-Command Controller
Typical Input/Output Connections

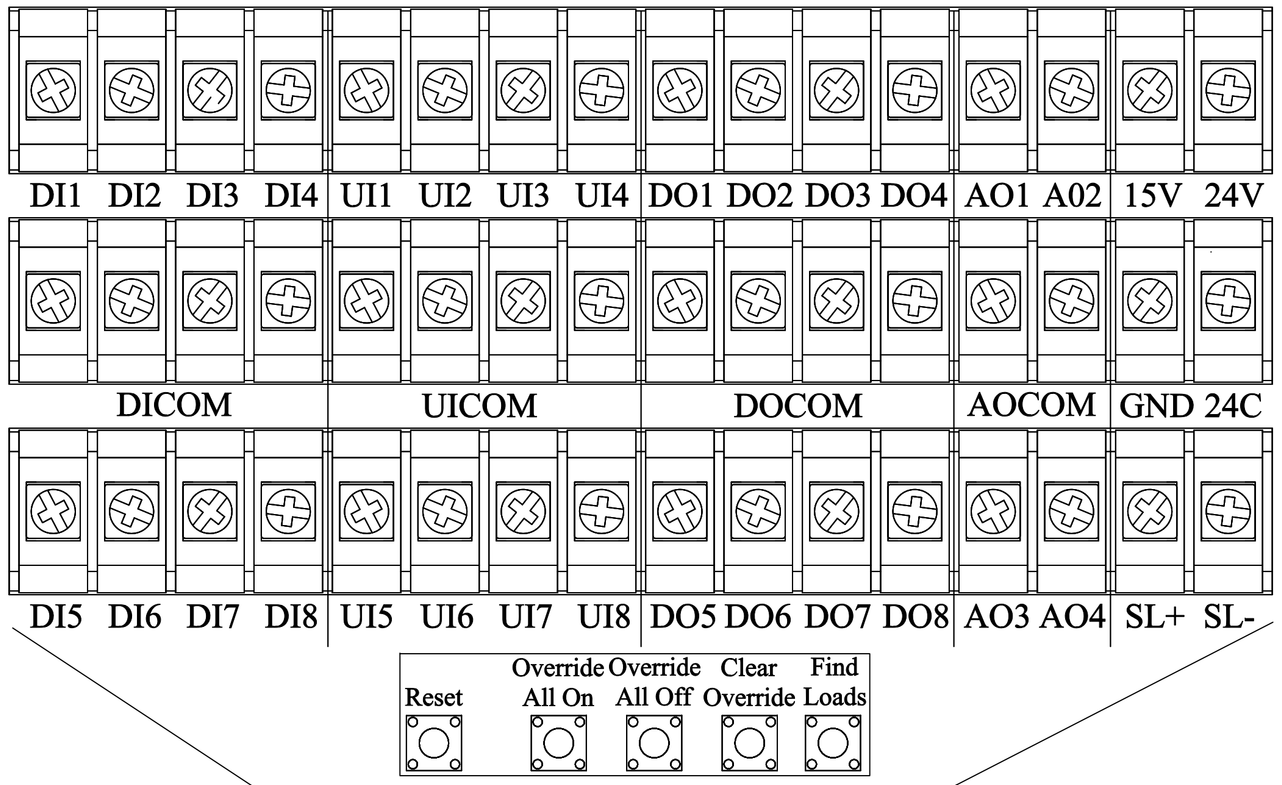

PRC Controller

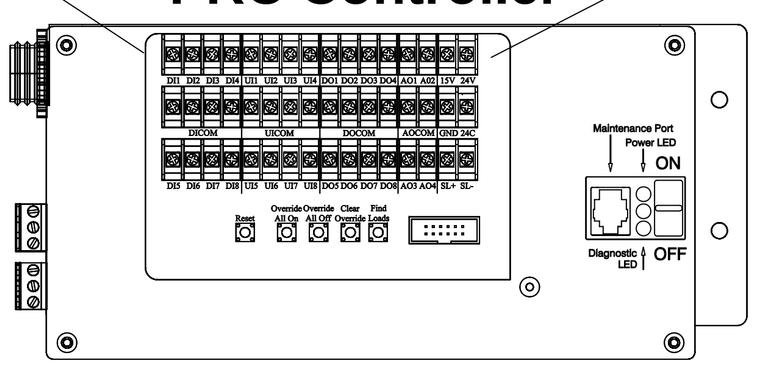

Controller IO		
Label	**Description**	**Notes**
DI	Digital Input for Dry-Contact input	18awg 500ft max
DICOM	Digital Input Common	
UI	Universal Input 0 -5 Vdc Analog or Digital	18awg 200ft max
UICOM	Universal Input Common	
DO	Digital Output for indicator LED	24V half-wave Max 10ma -18awg 250ft max
DOCOM	Digital Output for dry-contact input	
AO	Analog Output for Dimming	0 to 20ma output* - 18awg 1000ft max
AOCOM	Analog Output Common	
VDC	15VDC Output for Device Supply	Max 20ma
GND	Ground Connection Common for 15Vdc	
24V	24V AC Output for Device Supply	Max 100ma
24C	24V Common	
SL+	Digital Switch Network(DSN) + Connection	For more info on the DSN see
SL-	Digital Switch Network(DSN) - Connection	PRC-DigitalSwitchNetwork001

Input/Output Device Terminations

Dry-Contact Input
Momentary or Maintained

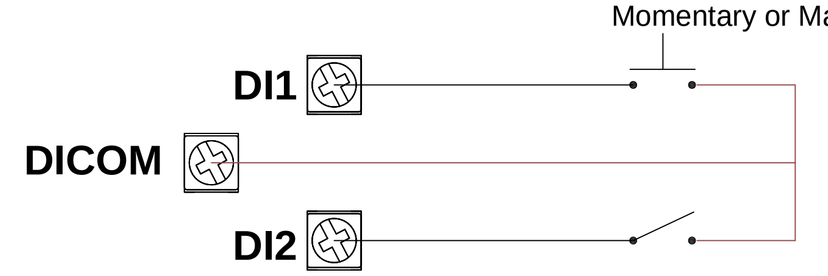

*Note- PRC Low-Voltage Swicth can be used for momentary Inputs.

PRC Low-Voltage Switch				
Part Number	**Description**		**Part Number**	**Description**
42C3590G01	2-Button Black		42C3590G06	4-Button Almond
42C3590G02	2-Button White		42C3590G07	6-Button Black
42C3590G03	2-Button Almond		42C3590G08	6-Button White
42C3590G04	4-Button Black		42C3590G09	4-Button Almond
42C3590G05	4-Button White			

Occupancy Sensor
Dry-Contact

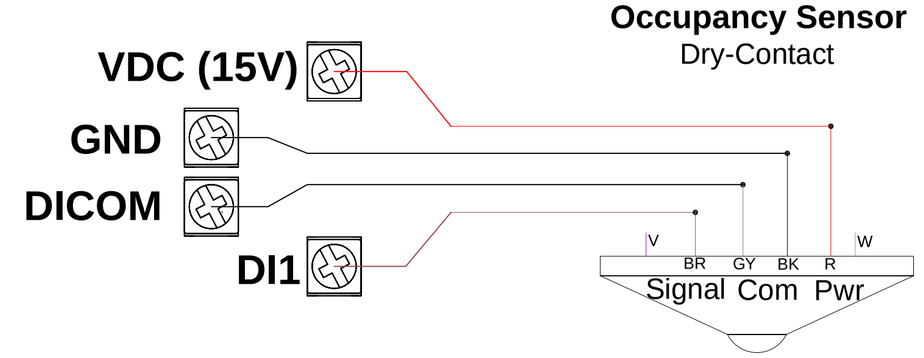

Occupancy Sensor	
Part Number	**Description**
LOS-CDT	Dual Technology Ceiling Mount Occupanct sensor with relay option
PPSH	Power Pack used When Multiple Occupancy sensors are needed
CM-9R	PIR Ceiling mount sensor with relay option
CM-10R	PIR Ceiling mount sensor ext range with relay option
CM-PDT-10R	PIR/MCR Dual Technology Ceiling mount with relay option

Photosensor
w/ 0 to 10V Signal Level

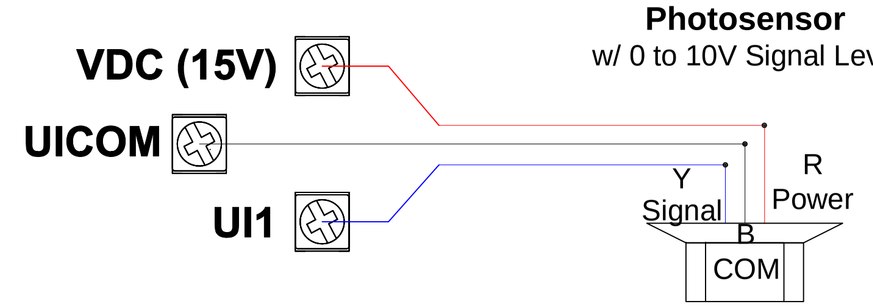

Photo Sensors	
Part Number	**Description**
42C3977G01	Indoor Sensor- 12V input, 0-10V output, 50 to 750 Fc
42C3977G02	Outdoor Sensor- 12V input, 0-10V output, 50 to 750 Fc
42C3977G03	Atrium Sensor- 12V input, 0-10V output, 50 to 750 Fc
42C3977G07	Skylight Sensor- 12V input, 0-10V output, 1000 to 7500 Fc

0-10V Dimming
Analog Level Output

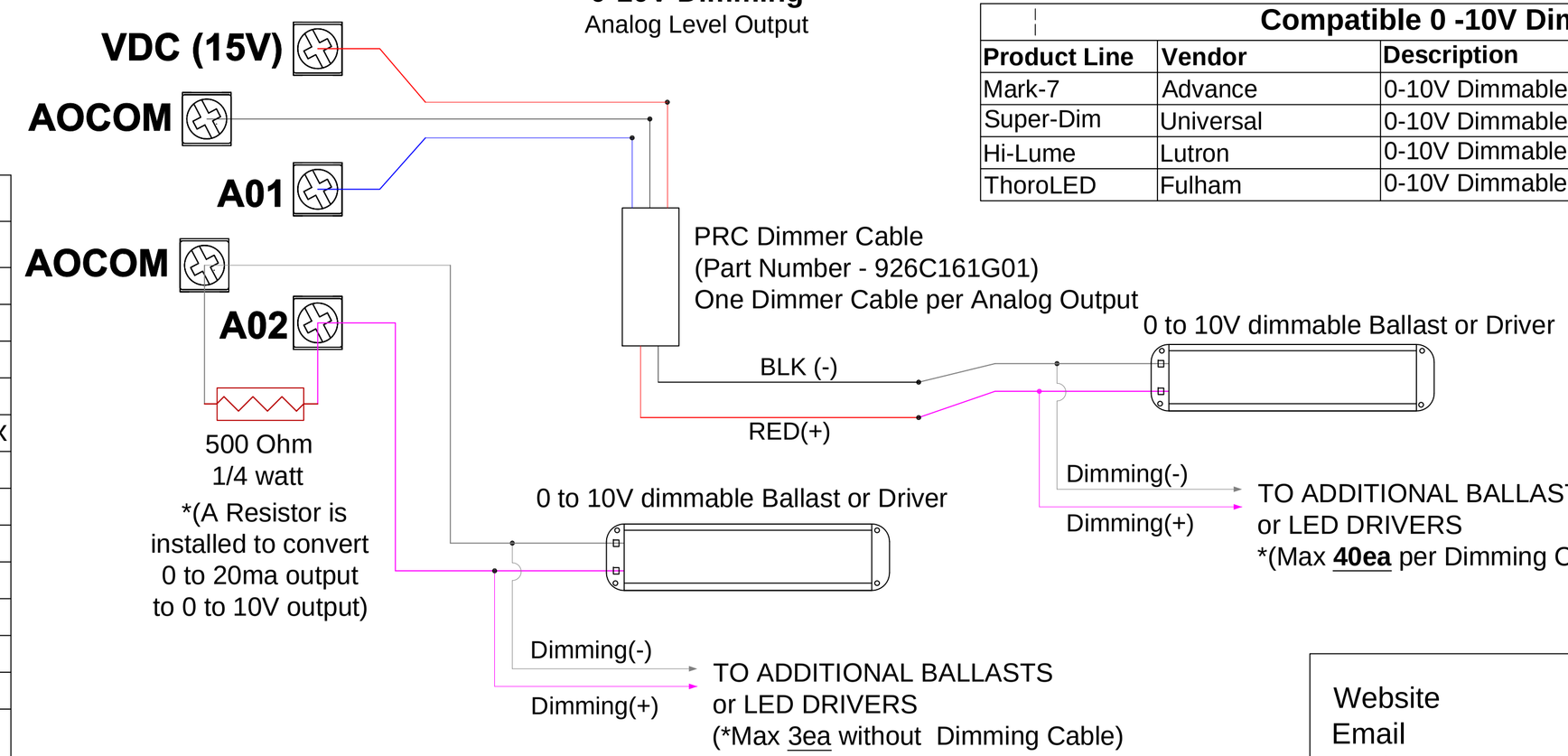

Compatible 0 -10V Dimming		
Product Line	**Vendor**	**Description**
Mark-7	Advance	0-10V Dimmable Ballast
Super-Dim	Universal	0-10V Dimmable Ballast
Hi-Lume	Lutron	0-10V Dimmable LED Driver (A-Series)
ThoroLED	Fulham	0-10V Dimmable LED Driver (TCD Series)

Website www.eaton.com/lightingcontrol
Email lightingcontrol@eaton.com
Tech Support (888) 252-6286 Option#3