Power Xpert Gateway 600A

Delivers real-time, Web-enabled monitoring of electrical distribution and control equipment

Product snapshot

The Power Xpert® Gateway 600A is typically installed in an electrical assembly – a motor control center, low/medium voltage switchgear or switchboard to consolidate data available from components such as trip units, meters, motor controllers and protective relays.

Product overview

- Open communication architecture
  - Connects to both Eaton® and third-party electrical equipment; communicates to INCOM, QCPort and Modbus RTU devices
  - Modbus TCP support facilitates integration with third-party monitoring solutions
  - Ethernet TCP support utilizes your existing network infrastructure, reducing costs
- Flexible and expandable solutions
  - Stand-alone or small systems benefit from comprehensive, on-board Web pages; no additional programming or software is necessary for virtually out-of-the-box, plug-and-play functionality
  - Larger systems, such as campus installations or power systems with remote locations can view multiple PXGs via Power Xpert Software or a third-party monitoring system
  - Existing equipment can be connected to the PXG to reap the benefits of Power Xpert Architecture at minimal cost, without the need to upgrade
  - Systems are easily expanded by adding devices as needed; the PXG600A supports up to 96 devices
- Information at a glance
  - Using a standard Web browser, view the PXG's Web pages that include a system summary status page and individual device detail pages
  - Comprehensive, well-organized device Web pages present measured parameters such as current, voltage, power, energy, frequency, power factor and voltage THD, just to name a few
  - Combine with Power Xpert Software for viewing multiple gateways and other power system equipment for more extensive power quality analysis
  - KYZ equipped meter applications allowing WAGES metering utilizing DIM

Monitoring energy in a networked world

Through standard onboard Web pages, Power Xpert Software or third-party software, Eaton's Power Xpert Gateway (PXG) 600A allows you to closely monitor the performance of your energy efficiency with easily accessed, real-time, Web-enabled data. Eaton's PXG600A provides a central point to connect up to 96 devices to an Ethernet network. The gateway may be used as a stand-alone device to view one system or location, or it can be easily integrated into a large, multi-location system.

EATON
Powering Business Worldwide

The PXG600A is our primary energy data acquisition solution for facility equipment like switchgear, switch boards, motor control centers, etc. Energy data from the downstream devices are time stamped and stored in non-volatile memory. This interval data can be stored or updated to a destination of the users choice through CSV. Data can also be accessed through any Web browser directly on the PXG. Users can move data into Power Xpert Software, BMS, NMS, building dashboards, custom software applications, or virtually any Web interface.

Features and benefits

Rugged, industrial design

- Designed specifically for industrial environments, the PXG has a compact, metal case that only requires convection cooling
- Stringent EMI design requirements ensure that the PXG will function in the most difficult EMI situations to deliver high reliability
- Mounting options are provided for panel mounting or DIN rail, allowing for installation flexibility

Smart configuration and user interface

- As an out-of-the-box, plug-and-play device, there is no additional software required to configure and view downstream devices
- All configuration menus are straightforward and easy to follow
- Upon configuring the PXG and associated devices, the data will automatically appear in the Web UI when you point your browser to the IP address of the PXG

Secure communication

- **Password Protection**
  Two levels of authorized access to data via the user interface
  1. User level permits viewing the data only
  2. Admin level permits configuration and changing settings, in addition to viewing data
- **Secure Web browsing**
  SSL Encryption option ensures that information and passwords exchanged with the PXG's Web server cannot be intercepted on the LAN
- **Access Control/Trusted Host List**
  Provides an additional method of security by limiting access to the communication ports by authorized trusted hosts IP addresses

Time synchronization

The PXG supports synchronization of clocks on INCOM devices that support the set time and date command. Additionally, the PXG can be combined with a network time server for accurate time stamping via NTP.

Real-time trending and viewing

The PXG600A allows the user to enable pre-selected parameters to be trended for each supported device. This feature is user-selectable on the device configuration page. A trend symbol is displayed next to the trended parameter on the device page. Selecting the trend symbol will generate a real-time graph via the Web UI for that parameter and can be viewed for the past 24 hours, seven days, 30 days or all past history.

Data, interval and event logging and analysis

The PXG600A stores both historical data and events that can be downloaded into a comma separated value (CSV) file format. Using Excel will allow you to perform analysis to discover potential system issues or proactively performing maintenance.

Summary of PXG600A features

Total number of supported devices	96
Maximum number of INCOM devices supported	64
Protocols supported on downstream devices: INCOM, QCPort and Modbus RTU	Yes
Number of downstream communication ports	3
Number of downstream protocols supported simultaneously	3
USB port for configuration	Yes
Modbus TCP/IP protocol supported	Yes
SNMP client access	Yes
INCOM slave action commands supported	Yes
INCOM date and time settings supported	Yes
Device summary screen per communication port	Yes
Device waveform access and storage – COMTrade file format	Yes
Set user-defined events	Yes
Real-time trending	Yes
Trend graphs displayed in Web browser	Yes
Data logging – csv file format, downloadable to Excel	Yes
Event notification via the Web interface	Yes
Event logs – csv file format, downloadable to Excel	Yes
Interval logs – csv file format, downloadable to Excel	Yes
Email notification on events and threshold alarms	Yes
Secure Ethernet communications - SSL encryption	Yes
Secure communication ports via access control/trusted host list	Yes
Save and restore configuration settings	Yes
Control commands supported	Yes (downloadable)

The Eaton Power Xpert Gateway 600A includes:
The Power Xpert Gateway Module
Mounting provisions and required hardware for panel and DIN rail mounting
CD-ROM: contains the User Manual, Modbus Register Maps, USB Driver and other associated files

Waveforms capture and downloads

The PXG600A supports waveform acquisition for supported devices capable of generating waveforms. This feature is user-selectable on the device configuration page. The waveform files are converted and stored as a COMTRADE file format in the PXG600A. The files can then be downloaded and viewed using a standard COMTRADE waveform viewer of your choice.

Supported control commands

The PXG600A supports select control commands, or writes, for INCOM and Modbus RTU devices via the Web interface. This feature is available by accessing **www.eaton.com/powerxpert**. Select the PXG tab and register to download the control EDS.

User-defined events

The PXG600A supports the setting of user-defined events on an individual device basis. This feature is set via the device configuration page. An example of a user-defined event would be a Low and High limit on Phase A Current for a device. The event limit values and the event names can be chosen by the user. These event notices behave in the same manner as the Device Events described above.

Email notification

You have the ability to customize and direct email notifications to up to 10 users in your organization. Select from event notifications, data logs, interval log, event logs and heartbeat emails. This provides yet one more way to effectively and proactively manage your power system.

Save and restore configuration settings

The PXG provides the ability to save the PXG device and network configuration settings to an XML file format. It can be used to restore settings to that PXG or any other PXG to facilitate configuration of similar systems.

Power Xpert Gateway 600A

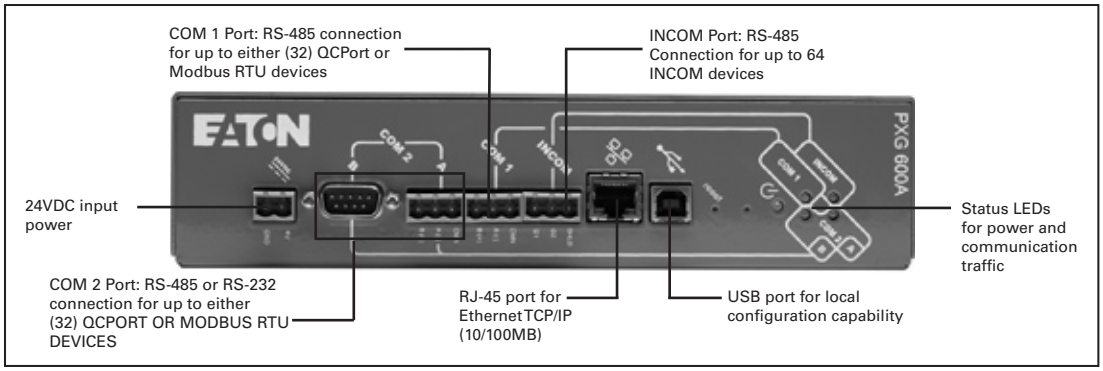

Power Xpert Gateway 600A with standard panel mounting (brackets included)

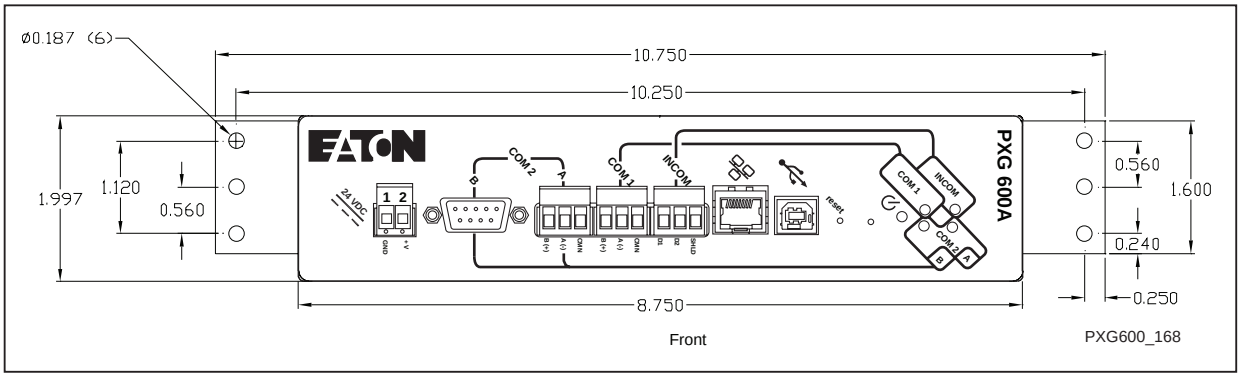

Power Xpert Gateway 600A with low profile mounting (optional bracket kit available)

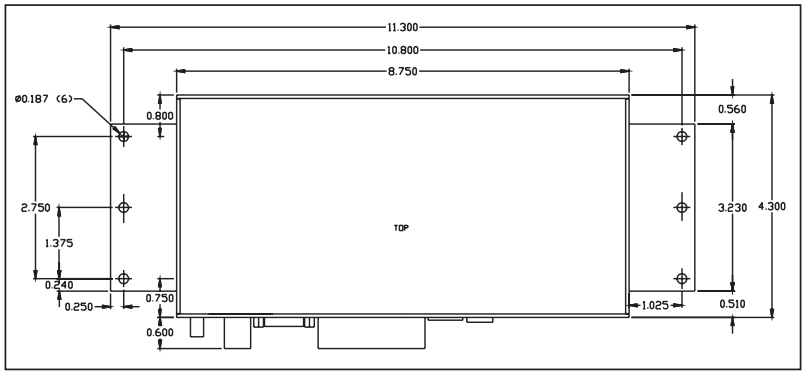

Power Xpert Gateway 600A with DIN rail mounting (brackets included)

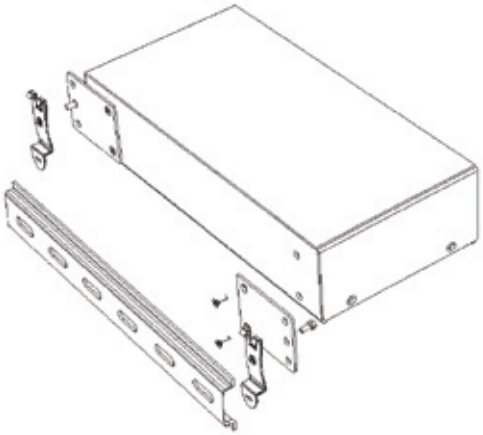

Data acquisition and integration table for supported devices

Protocol	Supported Devices: Device Type	Supported Devices: Device Name	HTTP (Web Browser)	Web Services (Power Xpert Software)	Modbus TCP (BMS & SCADA)	Pass-through INCOM (PowerNet)	Pass-through QCPort (CHStudio)	SNMP (NMS)	SMTP (Email Client)	File Export (CSV file format)	File Export (COMTRADE file format)
INCOM	Drive	Accutrol 400	•	•	•	•		•	•	•	
INCOM	Drive	AF97	•	•	•	•		•	•	•	
INCOM	I/O	Universal RTD	•	•	•	•		•	•	•	
INCOM	I/O	DIM	•	•	•	•		•	•	•	
INCOM	Meter	IQ DP-4000	•	•	•	•		•	•	•	
INCOM	Meter	IQ Energy Sentinel	•	•	•	•		•	•	•	
INCOM	Meter	IQ220 / IQ320	•	•	•	•		•	•	•	
INCOM	Meter	IQ230 / IQ330	•	•	•	•		•	•	•	
INCOM	Meter	IQ Analyzer (6000/6200)	•	•	•	•		•	•	•	•
INCOM	Meter	IQ Analyzer (6400/6600)	•	•	•	•		•	•	•	•
INCOM	Meter	IQ Data	•	•	•	•		•	•	•	
INCOM	Meter	IQ Data Plus	•	•	•	•		•	•	•	
INCOM	Meter	IQ Data Plus II	•	•	•	•		•	•	•	
INCOM	Meter	Power Manager	•	•	•	•		•	•	•	
INCOM	Meter	IQ Power Sentinel	•	•	•	•		•	•	•	
INCOM	Meter	IQMESII	•	•	•	•		•	•	•	
INCOM	Protective	DigiTrip 3000	•	•	•	•		•	•	•	
INCOM	Protective	DigiTrip 3200	•	•	•	•		•	•	•	
INCOM	Protective	FP-5000	•	•	•	•		•	•	•	•
INCOM	Protective	FP-4000	•	•	•	•		•	•	•	•
INCOM	Protective	MP-3000	•	•	•	•		•	•	•	
INCOM	Protective	MP-4000	•	•	•	•		•	•	•	
INCOM	Protective	DigiTrip 520MC	•	•	•	•		•	•	•	
INCOM	Protective	IQ 500	•	•	•	•		•	•	•	
INCOM	Protective	MPCV Relay	•	•	•	•		•	•	•	
INCOM	Protective	DigiTrip 1150/DT1150V	•	•	•	•		•	•	•	•
INCOM	Protective	DigiTrip 810	•	•	•	•		•	•	•	
INCOM	Protective	DigiTrip 910	•	•	•	•		•	•	•	
INCOM	Protective	DigiTrip MV	•	•	•	•		•	•	•	
INCOM	Protective	Digitrip OPTIM 1050	•	•	•	•		•	•	•	•
INCOM	Protective	Digitrip OPTIM 550	•	•	•	•		•	•	•	
INCOM	Protective	Digitrip OPTIM 750	•	•	•	•		•	•	•	
INCOM	Protective	FP-6000	•	•	•	•		•	•	•	•
INCOM	I/O	DIM-KYZ	•	•	•	•		•	•	•	
INCOM	Starter	Advantage	•	•	•	•		•	•	•	
INCOM	Starter	Advantage ACM	•	•	•	•		•	•	•	
INCOM	Sub-network Master	AEM II	•	•	•	•			•	•	
INCOM	Sub-network Master	BIM II	•	•	•	•			•	•	
INCOM	Sub-network Master	CMU	•	•	•	•			•	•	
INCOM	Sub-network Master	IQ CED II	•	•	•	•			•	•	
INCOM	Transfer Switch	ATC-400	•	•	•	•		•	•	•	
INCOM	Transfer Switch	ATC-600	•	•	•	•		•	•	•	
INCOM	Transfer Switch	ATC-800	•	•	•	•		•	•	•	

Protocol	Supported Devices: Device Type	Device Name	HTTP (Web Browser)	Web Services (Power Xpert Software)	Modbus TCP (BMS & SCADA)	Pass-through INCOM (PowerNet)	Pass-through QCPort (CHStudio)	SNMP (NMS)	SMTP (Email Client)	File Export (CSV file format)	File Export (COMTRADE file format)
Modbus	Drive	MVX9000	•	•	•			•	•	•	
	Drive	SVX9000	•	•	•			•	•	•	
	Insulation Monitor	Insulgard	•	•	•			•	•	•	
	Meter	IQ230M / IQ330M	•	•	•			•	•	•	
	Meter	IQ250	•	•	•			•	•	•	
	Meter	IQ260	•	•	•			•	•	•	
	Meter	SQD CM3000 Series	•	•	•			•	•	•	
	Meter	SQD CM4000 Series	•	•	•			•	•	•	
	Meter	SQD PM710	•	•	•			•	•	•	
	Meter	SQD PM850	•	•	•			•	•	•	
	Meter	PML 7350	•	•	•			•	•	•	
	Meter	PML 7550	•	•	•			•	•	•	
	Meter	PML 7650	•	•	•			•	•	•	
	Protective	GE 369 Motor Relay	•	•	•			•	•	•	
	Protective	GE 469 Motor Relay	•	•	•			•	•	•	
	Temp Monitor	Qualitrol 118	•	•	•			•	•	•	
	Transformer Differential Relay	ABB TPU 2000	•	•	•			•	•	•	
	Overload Relay	C441	•	•	•			•	•	•	
	Protective	FP-5000	•	•	•			•	•	•	
	Protective	FP-6000	•	•	•		•	•	•	•	
	Protective	EDR-3000	•	•	•		•	•	•	•	
	Meter	IQ130	•	•	•			•	•	•	
	Meter	IQ140	•	•	•			•	•	•	
	Meter	IQ150	•	•	•			•	•	•	
	Meter	Nexus 1262/1272	•	•	•			•	•	•	
QCPort	I/O	D77A-AI16	•	•	•		•	•	•	•	
	I/O	D77A-AI8	•	•	•		•	•	•	•	
	I/O	D77A-DI16	•	•	•		•	•	•	•	
	I/O	D77A-DI8	•	•	•		•	•	•	•	
	Starter	IT S811 (MV811)	•	•	•		•	•	•	•	
	Starter	IT Starter	•	•	•		•	•	•	•	
	Starter	IT Starter Qsnap	•	•	•		•	•	•	•	

Device parameters displayed via the PXG Web UI

The table below represents many of the parameters displayed on the Web UI page for a given device; however it is not exhaustive. For the complete list of parameters displayed, per device, refer to the Device Data Map file at **www.eaton.com/powerxpert**.

		IQ Meters																		Circuit Breaker Trip Units									Protective		
	Units	IQ Data Plus II	IQ Data Plus	IQ Data	IQ Analyzer 6000/6200	IQ Analyzer 6400/6600	IQ DP-4000	IQ 220/320	IQ 230/330	IQ 230/330M	IQ 250	IQ 260	IQ Power Sentinel	IQ Energy Sentinel	IQ MESII	IQ 130	IQ 140	IQ 150	Power Manager	Digitrip 1150	Digitrip 520MC	Digitrip RMS 910	Digitrip RMS 810	Digitrip OPTIM 1050	Digitrip OPTIM 550	Digitrip OPTIM 750	Digitrip MV	Digitrip 3000	Digitrip 3200	IQ 500	MPVCV relay
Voltage																															
Average	V	-	-	-	x	x	-	-	-	-	-	-	-	-	-	-	-	-	-	-	-	-	-	-	-	-	-	-	-	-	-
Voltage (Line-Line)	V	x	x	x	x	x	x	x	x	x	x	x	x	-	-	x	x	x	-	x	-	x	-	-	-	-	-	-	-	-	-
Voltage (Line-Neutral)	V	x	x	x	x	x	x	x	x	x	x	x	x	-	x	x	x	x	x	-	-	-	-	-	-	-	-	-	-	-	x
Current																															
Average	A	-	-	-	x	x	-	-	-	-	-	-	-	-	-	-	-	-	-	-	-	-	-	-	-	-	-	-	-	-	-
Phase	A	x	x	x	x	x	x	x	x	x	x	x	x	-	-	x	x	x	-	x	x	x	x	x	x	x	x	x	x	x	x
Ground	A	-	-	-	x	x	-	-	-	x	-	-	-	-	-	-	-	-	-	x	x	x	x	x	x	x	x	x	x	x	-
Neutral	A	-	-	-	x	x	x	x	x	x	x	x	-	-	-	-	-	-	-	x	x	x	x	x	x	x	x	x	x	-	-
Peak	A	-	-	-	x	x	x	x	x	x	x	x	-	-	-	x	x	x	-	x	-	-	-	x	x	x	x	x	x	-	-
Demand	A	-	-	-	x	x	x	x	x	x	x	x	-	-	-	x	x	x	-	x	-	-	-	x	x	x	-	-	-	-	-
Power																															
Apparent	VA	-	-	-	x	x	x	x	x	x	x	x	x	-	-	-	x	x	-	x	-	-	-	-	-	-	-	-	-	-	-
Reactive	VAR	x	x	-	x	x	x	x	x	x	x	x	x	-	-	-	x	x	-	x	-	-	-	-	-	-	-	-	-	-	x
Real	W	x	x	-	x	x	x	x	x	x	x	x	x	x	x	-	x	x	x	x	-	x	x	x	-	-	-	-	-	-	x
Power factor																															
Apparent	PF	x	x	-	x	x	x	x	x	x	x	x	x	-	-	-	x	x	-	x	-	-	-	x	-	-	-	-	-	-	-
Displacement	PF	-	-	-	x	x	x	x	x	x	x	x	x	-	-	-	-	-	-	-	-	-	-	x	-	-	-	-	-	-	-
Energy																															
Real	Wh	x	x	-	x	x	x	x	x	x	x	x	x	x	x	-	-	x	x	x	-	x	x	x	-	-	-	-	-	-	-
Forward	Wh	-	-	-	x	x	x	x	x	x	x	x	-	-	x	-	x	x	-	x	-	x	x	x	-	-	-	-	-	-	-
Reverse	Wh	-	-	-	x	x	x	x	x	x	x	x	-	-	-	-	x	x	-	x	-	x	x	x	-	-	-	-	-	-	-
Apparent	Vah	-	-	-	x	x	x	x	x	x	x	x	-	-	-	-	-	x	-	x	-	-	-	-	-	-	-	-	-	-	-
Reactive	VARh	-	-	-	x	x	x	x	x	x	x	x	-	-	-	-	-	x	-	-	-	-	-	-	-	-	-	-	-	-	-
Leading	VARh	-	-	-	x	x	x	x	x	x	x	x	-	-	-	-	x	x	-	-	-	-	-	-	-	-	-	-	-	-	-
Lagging	VARh	-	-	-	x	x	x	x	x	x	x	x	-	-	-	-	x	x	-	-	-	-	-	-	-	-	-	-	-	-	-
Power quality																															
THD	%	-	-	-	x	x	x	-	-	-	-	x	-	-	-	-	-	-	-	-	-	-	-	x	-	-	-	-	-	-	-
Current THD	%	-	-	-	x	x	x	-	-	-	-	x	-	-	-	-	-	-	-	x	-	-	-	x	-	-	-	-	-	-	-
Voltage THD	%	-	-	-	x	x	x	-	-	-	-	x	-	-	-	-	-	-	-	-	-	-	-	x	-	-	-	-	-	-	-
Frequency	Hz	x	x	x	x	x	x	x	x	x	x	x	x	-	-	-	x	x	-	-	-	-	-	-	-	-	-	-	-	-	-
Waveform capture	n/a	-	-	-	x	x	x	-	-	-	-	-	-	-	-	-	-	-	-	x	-	-	-	x	-	-	-	-	-	-	-
Temperature																															
Ambient	C	-	-	-	-	-	-	-	-	-	-	-	-	-	-	-	-	-	-	-	-	-	-	-	-	-	-	-	-	-	-
Auxillary	C	-	-	-	-	-	-	-	-	-	-	-	-	-	-	-	-	-	-	-	-	-	-	-	-	-	-	-	-	-	-
Load bearing	C	-	-	-	-	-	-	-	-	-	-	-	-	-	-	-	-	-	-	-	-	-	-	-	-	-	-	-	-	-	-
Motor bearing	C	-	-	-	-	-	-	-	-	-	-	-	-	-	-	-	-	-	-	-	-	-	-	-	-	-	-	-	-	-	-
Winding	C	-	-	-	-	-	-	-	-	-	-	-	-	-	-	-	-	-	-	-	-	-	-	-	-	-	-	-	-	-	-
Phase (L, C, R)	C	-	-	-	-	-	-	-	-	-	-	-	-	-	-	-	-	-	-	-	-	-	-	-	-	-	-	-	-	-	-
Terminal block	C	-	-	-	-	-	-	-	-	-	-	-	-	-	-	-	-	-	-	-	-	-	-	-	-	-	-	-	-	-	-
Input status																															
Count		-	-	-	x	x	-	-	-	-	-	-	-	-	-	-	-	-	-	-	-	-	-	-	-	-	-	-	-	-	x
Status/cause of trip		-	-	-	-	-	-	-	-	-	-	-	-	-	-	-	-	-	-	x	x	x	x	x	x	x	x	x	x	x	x
Thermal memory		-	-	-	-	-	-	-	-	-	-	-	-	-	-	-	-	-	-	-	-	-	-	-	-	-	-	-	-	-	-
Pole temp		-	-	-	-	-	-	-	-	-	-	-	-	-	-	-	-	-	-	-	-	-	-	-	-	-	-	-	-	-	-
Winding temp		-	-	-	-	-	-	-	-	-	-	-	-	-	-	-	-	-	-	-	-	-	-	-	-	-	-	-	-	-	-
Fan status		-	-	-	-	-	-	-	-	-	-	-	-	-	-	-	-	-	-	-	-	-	-	-	-	-	-	-	-	-	-
Alarm/trip relay		-	-	-	-	-	-	-	-	-	-	-	-	-	-	-	-	-	-	-	-	-	-	-	-	-	-	-	-	-	-

Relays						Insulation Monitor	Motor Starters & VFDs							Transfer Switches			I/O							Third-Party Devices											
FP-4000	FP-5000	MP-3000	MP-4000	FP-6000	EDR-3000	Insulgard	Accutrol 400	AF97	Advantage Starters	IT S811	IT. Starters/Qsnap	C441 Overload Relay	SVX & MVX Drives	ATC-400	ATC-600	ATC-800	Digital Input Module	D77A-AI16	D77A-AI8	D77A-DI16	D77A-DI8	Digital Input Module KYZ	Universal RTD	SQD CM 3000 Series	SQD CM 4000 Series	SQD PM 710	SQD PM 850	PML 7350	PML 7550	PML 7650	GE 369 Motor Relay	GE 469 Motor Relay	ABB TPU 2000	Qualitrol 118	Nexus 1262/1272
x	x	-	x	-	-	x	x	-	-	-	-	x	x	-	-	-	-	-	-	-	-	-	-	x	x	-	x	x	x	x	-	-	-	-	x
x	x	-	x	-	-	-	-	-	-	x	-	x	-	x	x	x	-	-	-	-	-	-	-	x	x	x	x	x	x	x	x	x	-	-	x
x	x	-	x	-	-	-	-	-	-	-	-	-	-	-	-	-	-	-	-	-	-	-	-	x	x	x	x	x	x	x	-	-	x	-	x
x	x	x	x	-	-	x	x	-	-	x	x	x	x	-	-	-	-	-	-	-	-	-	-	x	x	x	-	x	x	x	x	x	-	-	x
x	x	x	x	-	x	-	-	x	x	x	-	-	-	-	-	-	-	-	-	-	-	-	-	x	x	x	x	x	x	x	x	x	x	x	x
x	x	x	x	x	-	-	-	-	-	-	-	x	-	-	-	-	-	-	-	-	-	-	-	x	x	-	-	-	-	-	x	x	-	-	-
x	x	-	-	x	-	-	-	-	-	-	-	-	-	-	-	-	-	-	-	-	-	-	-	x	x	x	-	x	x	x	-	-	-	-	x
x	x	-	-	-	x	-	-	-	-	-	-	-	-	-	-	-	-	-	-	-	-	-	-	x	x	x	x	x	x	x	-	-	-	-	x
x	x	-	-	-	x	-	-	-	-	-	-	-	-	-	-	-	-	-	-	-	-	-	-	x	x	x	x	x	x	x	-	x	-	-	x
x	x	-	x	-	-	-	x	-	-	-	-	-	-	-	-	-	-	-	-	-	-	-	-	x	x	x	x	x	x	x	-	x	x	-	x
x	x	-	x	-	-	-	-	-	-	-	-	-	-	-	-	-	-	-	-	-	-	-	-	x	x	x	x	x	x	x	x	x	x	-	x
x	x	-	x	-	-	-	-	-	-	-	-	-	-	-	-	-	-	-	-	-	-	-	-	x	x	x	x	x	x	x	x	x	x	-	x
x	x	-	x	-	-	-	-	-	-	-	-	-	-	-	-	-	-	-	-	-	-	-	-	x	x	x	x	x	x	x	x	x	x	-	x
x	x	-	x	-	-	-	-	-	-	-	-	-	-	-	-	-	-	-	-	-	-	-	-	x	x	x	-	-	-	-	-	-	-	-	-
x	x	-	x	-	-	-	-	-	-	-	-	-	-	-	-	-	-	-	-	-	-	x	-	x	x	x	x	x	x	x	x	x	x	-	x
x	x	-	-	-	-	-	-	-	-	-	-	-	-	-	-	-	-	-	-	-	-	-	-	x	x	-	x	x	x	x	-	x	-	-	x
x	x	-	-	-	-	-	-	-	-	-	-	-	-	-	-	-	-	-	-	-	-	-	-	x	x	-	x	x	x	x	-	-	-	-	x
x	x	-	x	-	-	-	-	-	-	-	-	-	-	-	-	-	-	-	-	-	-	-	-	x	x	x	x	x	x	x	-	-	-	-	-
x	x	-	-	-	-	-	-	-	-	-	-	-	-	-	-	-	-	-	-	-	-	-	-	x	x	x	x	x	-	-	-	-	-	-	-
x	x	-	-	-	-	-	-	-	-	-	-	-	-	-	-	-	-	-	-	-	-	-	-	x	x	-	x	x	x	x	-	-	-	-	x
x	x	-	-	-	-	-	-	-	-	-	-	-	-	-	-	-	-	-	-	-	-	-	-	x	x	-	x	x	x	x	-	-	-	-	x
-	-	-	-	x	-	-	-	-	-	-	-	-	-	-	-	-	-	-	-	-	-	-	-	-	-	-	x	-	-	-	-	-	-	-	-
x	x	-	-	-	-	-	-	-	-	-	-	-	-	-	-	-	-	-	-	-	-	-	-	-	-	-	-	-	-	-	-	-	-	-	x
x	x	-	-	-	-	-	-	-	-	-	-	-	-	-	-	-	-	-	-	-	-	-	-	-	-	-	-	-	-	-	-	-	-	-	x
x	x	-	-	-	-	x	x	-	-	-	-	x	x	x	x	x	-	-	-	-	-	-	-	x	x	x	x	x	x	x	x	x	-	-	x
x	x	-	-	-	-	-	-	-	-	-	-	-	-	-	-	-	-	-	-	-	-	-	-	-	-	-	-	-	-	-	-	-	-	-	-
-	-	-	-	-	-	x	-	-	-	-	-	-	x	-	-	-	-	-	-	-	-	-	-	-	-	-	-	-	-	-	-	-	-	-	-
-	-	x	x	-	-	-	-	-	-	-	-	-	-	-	-	-	-	-	-	-	-	-	x	-	-	-	-	-	-	-	-	-	-	-	-
-	-	x	x	-	-	-	-	-	-	-	-	-	-	-	-	-	-	-	-	-	-	-	x	-	-	-	-	-	-	-	x	x	-	-	-
-	-	x	x	-	-	-	-	-	-	-	-	-	-	-	-	-	-	-	-	-	-	-	x	-	-	-	-	-	-	-	x	x	-	-	-
-	-	x	x	-	-	-	-	-	-	-	-	-	-	-	-	-	-	-	-	-	-	-	x	-	-	-	-	-	-	-	x	x	-	-	-
-	-	-	-	-	-	-	-	-	-	-	-	-	-	-	-	-	-	-	-	-	-	-	-	-	-	-	-	-	-	-	-	-	-	x	-
-	-	-	-	-	-	-	-	-	-	-	-	-	-	-	-	-	-	-	-	-	-	-	-	-	-	-	-	-	-	-	-	-	-	x	-
x	x	2	2	x	-	-	-	-	-	x	x	-	x	-	-	-	8	16	8	16	8	4	-	-	-	-	-	-	-	-	-	-	-	-	8
x	x	x	x	x	-	-	-	-	-	x	x	x	x	-	-	-	-	-	-	-	-	-	-	-	-	-	-	-	-	-	x	x	-	-	-
-	-	-	-	-	-	-	-	-	-	x	x	x	x	-	-	-	-	-	-	-	-	-	-	-	-	-	-	-	-	-	-	-	-	-	-
-	-	-	-	-	-	-	-	-	-	x	x	-	x	-	-	-	-	-	-	-	-	-	-	-	-	-	-	-	-	-	-	-	-	-	-
-	-	-	-	-	-	-	-	-	-	-	-	-	-	-	-	-	-	-	-	-	-	-	-	-	-	-	-	-	-	-	-	-	x	x	-
-	-	-	-	-	-	-	-	-	-	-	-	-	-	-	-	-	-	-	-	-	-	-	-	-	-	-	-	-	-	-	-	-	x	x	-
-	-	-	-	x	-	-	-	-	-	-	-	-	-	-	-	-	-	-	-	-	-	-	-	-	-	-	-	-	-	-	-	-	x	x	-

Technical specifications

PXG part numbers

Eaton catalog number	Eaton style number	Description
PXG600A	66D2146G01	Power Xpert Gateway 600A
ELC-PS02	ELC-PS02	Power Supply - 24 VDC
PXGACC01	66B2146G01	Low Profile Mounting Bracket Kit

Memory

Flash: 128 MB

RAM: 64 MB

Communication ports

Network port	one 10/100 Base T RJ-45 connector
Serial ports	one RS-485 port for connection to either QCPort or Modbus RTU devices one dedicated RS-485 port for INCOM devices one RS-485 or RS-232 port for connection to either QCPort or Modbus RTU devices
Configuration port	one USB port

Network protocols supported

Modbus TCP/IP	Supports data access from Modbus TCP clients
Web server	Supports data access from Web browsers (HTTP and HTTPS)
DHCP	Supports automatic IP address assignments, if enabled
SNMP	Supports common network management tools
NTP	Supports time synchronization via a network time server for PXG synchronization
SMTP	Supports mail server for email notification

Serial protocols supported

INCOM

QCPort

Modbus RTU

Web browsers recommended

IE 6.0 and 7.0

Mozilla Firefox 2.0

Number of devices supported

96 total with INCOM Port + COM 1 Port + COM 2 PORT not to exceed 96

Port limitations are as follows:

- INCOM Port: Up to 64 INCOM devices
- COM 1 Port: Up to 32 QCPort or Modbus RTU devices
- COM 2 Port: Up to 32 QCPort or Modbus RTU devices

Power input

Input voltage, nominal: 24 VDC; 0.8A

Input voltage range: +/- 20% Nominal

Power consumption

8 watts maximum

Operating temperature

32 to 140° F (0 to 60° C)

Ambient storage temperature

-40 to 185° F (-40 to 85° C)

Relative humidity

5 to 95% non-condensing at 122° F (50° C)

Size (H x D x L)

2.1" x 4.5" x 8.9"

Weight

1.5 pounds

Regulatory and standards compliance

UL 508, Standard for Programmable Controller Equipment

FCC, Class A, Part 15, Subpart B, Sections 15.107b & 15.109b

EN55022: 1994 Class A, Information Technology Equipment

EN 61000-6-2:2001 Electromagnetic Compatibility (EMC) Party 6-2: Immunity for Industrial Environments

Note: Features and specifications listed in this document are subject to change without notice and represent the maximum capabilities of the product with all options installed. Although every attempt has been made to ensure the accuracy of information contained within, Eaton makes no representation about the completeness, correctness or accuracy and assumes no responsibility for any errors or omissions. Features and functionality may vary depending on selected options.

Powering Business Worldwide

Eaton Corporation
Electrical Sector
1111 Superior Ave.
Cleveland, OH 44114
United States
877-ETN-CARE (877-386-2273)
www.eaton.com/pxg

© 2010 Eaton Corporation
All Rights Reserved
Printed in USA
TD02601013E / TN
March 2010

PowerChain Management™

Eaton, Power Xpert and PowerChain Management are registered trademarks of Eaton Corporation.

All other trademarks are property of their respective owners.