NEMA Vacuum Break Starter

Type 12 Non-Reversing Vacuum Starter with HMCP

Type 12 Non-Reversing Vacuum Starter with Fused Disconnect

8.1 Special Purpose and Mining Rating

Product Description V10-T8-2
Application Description V10-T8-2
Operation V10-T8-2
Features and Benefits V10-T8-3
Standards and Certifications V10-T8-3
Additional Reference V10-T8-3
Catalog Number Selection V10-T8-4
Cover Control
- Non-Reversing V10-T8-5
- Reversing V10-T8-6

Product Selection—Contactors V10-T8-7
- Field Modification Kits V10-T8-8

Product Selection—Starters
- Non-Combination Starters V10-T8-9
- Combination Starters V10-T8-12

Wiring Diagrams V10-T8-18

Special Purpose and Mining Rating

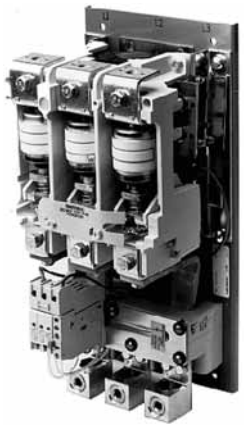

Contents

Description	*Page*
Special Purpose and Mining Rating	
Features and Benefits	**V10-T8-3**
Standards and Certifications	**V10-T8-3**
Catalog Number Selection	**V10-T8-4**
Cover Control	
Non-Reversing	**V10-T8-5**
Reversing	**V10-T8-6**
Contactors	**V10-T8-7**
Starters	
Non-Combination Starters	**V10-T8-9**
Combination Starters	**V10-T8-12**
Wiring Diagrams	**V10-T8-18**

Product Description

- Three-phase magnetic
- Three-pole full voltage
- Non-reversing and reversing
- 600 and 1500 Vac maximum
- Starters with interchangeable heater OLR

Application Description

Eaton's vacuum contactors are designed for starting and controlling three-phase, 50/60 Hz, AC motors. Motor full load current should not exceed the contactor current rating. These contactors are built in several versions—the nameplate on a specific contactor states the authorized ratings.

Low voltage vacuum contactors can be applied to a wide range of voltages up to 1500V. These applications include full voltage control of three-phase squirrel cage motors, primary control of low voltage wound rotor motors and circuit switching for low voltage capacitors for power factor improvement.

Operation

The contact structures of these vacuum break contactors are located inside sealed ceramic tubes that have been evacuated of air. Any arc occurring across the contacts upon opening is automatically extinguished because ionized air is not available to sustain it—the arc breaks when the current passes through zero. The arc typically does not survive beyond the first half cycle once the contacts begin to separate. The large arc chutes normally associated with starters of this size are not required. The ceramic tube with the moving and stationary contacts enclosed is called a **vacuum interrupter** or a **bottle**, and there is one bottle for each pole of the contactor. A metal bellows (like a small, circular accordion) within the bottle allows the moving contact to be closed and pulled open from the outside without leaking air into the bottle. Both the bellows and the metal-to-ceramic seals of these state-of-the-art bottles have been refined to the point where the possibility of loss of vacuum has been virtually eliminated.

Contact Force and Altitude

A vacuum contactor is affected by atmospheric pressure on the bellows of the vacuum bottles. Up to an altitude of 6600 ft, the contactor is designed to tolerate normal variations in barometric pressure. If the contactor is to be operated above 6600 ft above sea level, consult Eaton.

Features and Benefits

- Rugged, compact, lightweight
- Quiet operation
- Front removable coil and auxiliaries
- Electrical and mechanical interlocking capability
- Low chop interrupters eliminate the need for surge suppressors
- Contact wear indication allows for planned maintenance program
- Long service life
- Manual push-to-reset button on Sizes 5 and 6
- Freedom overload
- SSOL

Standards and Certifications

Note: See **Tab 17** for additional information on standards and certifications that apply to all enclosed control products.

- UL Listed
- cUL Listed (indicates appropriate CSA Standard investigation)
- CE Mark available
- ABS Type Approved
- OSHPD Certified (OSP-0015-10)

Additional Reference

Cover Control **V10-T8-5**
Wring Diagram **V10-T8-18**
Dimensions . . . . . **Tab 14**
Accessories and Modifications . . . . . **Tab 15**
Renewal Parts . . . . . **Tab 16**
Technical Data and Specifications . . . . . **Tab 17**

Catalog Number Selection

NEMA Vacuum Break

EC V 05 5 1 A A A - __

Design

V = Vacuum

Modification Codes

See **Tab 15**

Class	Page
01 = Non-reversing contactor—three-pole	**V10-T8-7**
02 = Reversing contactor—three-pole	**V10-T8-8**
05 = Non-combination non-reversing starters	**V10-T8-9**
06 = Non-combination reversing starters	**V10-T8-10**
07 = Non-combination non-reversing starters with CPT	**V10-T8-11**
16 = Combination non-reversing starters—fusible and non-fusible disconnect	**V10-T8-12**
17 = Combination reversing starters—fusible and non-fusible disconnect	**V10-T8-13**
18 = Combination non-reversing starters—fusible and non-fusible disconnect with CPT	**V10-T8-14**
22 = Combination non-reversing starters—circuit breaker	**V10-T8-15**
23 = Combination reversing starters—circuit breaker	**V10-T8-16**
24 = Combination non-reversing starters—circuit breaker with CPT	**V10-T8-17**

Disconnect Fuse Clip Ratings

A = None	**L** = 400A/600V R
H = 200A/250V R	**M** = 600A/250V R
J = 200A/600V R	**N** = 600A/600V R
K = 400A/250V R	

Circuit Breaker Ratings

A = None	**K** = 400A
H = 150A	**L** = 600A
J = 250A	**M** = 800A

Cover Control

Non-reversing starters see table on **Page V10-T8-5**
Reversing starters see table on **Page V10-T8-6**

Contactors

3 = Three-pole

NEMA Size

4
5
6

Coil Voltage or Motor Voltage

A = 120V	**D** = 575V
B = 230V	**E** = 200V
C = 460V	**V** = 380V

Enclosure Type

1 = 1—general purpose
2 = 3R—rainproof
3 = 4—painted steel
4 = 4X—304-Grade stainless steel
8 = 12—dust-tight
9 = 4X—316-Grade stainless steel

Alternate "Open" Catalog Numbers

Listed "Open" Catalog Number	Alternate "Open" Catalog Number	Listed "Open" Catalog Number	Alternate "Open" Catalog Number
AV10FNOA	**V200M4CJC**	**CV10FN3A**	**V201K4CJ**
AV10GNOAB	**V200M5CJC**	**CV10GN3A**	**V201K5CJZ1**
AV10JNOAB	**V200M6CJC**	**CV10JN3A**	**V201K6CJZ1**

Note

Above are NEMA rated devices for applications up to 600V. For special purpose devices up to 1500V consult Eaton.

Cover Control

Non-Reversing

Flange Control Kits

For on-the-job conversion of Type 1, 3R, 4X and 12 enclosed starters. Knockouts are provided on the Type 1 flange. Type 3R, 4X and 12 have prepunched holes with removable hole plugs.

Factory Installed

To order factory installed pilot devices, change the ninth character of the catalog number to the alpha shown in the table below. Example: to order an **ECV0548AAA** with START/STOP pushbuttons and a red pilot light, change the **A** to a **C**, that is, ECV0548A**C**A.

Non-Reversing Cover Control

Non-Reversing Cover Control Field Kits and Factory Installation

Description	Factory Installed Flange Control Position 9 Alpha	Field Installation Kits Type 1 Non-Combination ① Catalog Number	All Others ② Catalog Number
No cover mounted pilot devices	**A**	**C400GK0**	—
START/STOP pushbuttons	**B**	**C400GK1**	**C400T1**
With red RUN pilot light	**C**	**C400GK12** ③	—
With red RUN/green OFF lights	**D**	**C400GK16** ③	—
ON/OFF pushbuttons	**E**	—	**C400T2**
With red RUN pilot light	**F**	—	—
With red RUN/green OFF lights	**G**	—	—
HAND/OFF/AUTO selector switch	**H**	**C400GK3**	**C400T12**
With red RUN pilot light	**J**	**C400GK32** ③	—
With red RUN/green OFF lights	**K**	**C400GK36** ③	—
START pushbutton	**L**	—	**C400T3**
ON pushbutton	**M**	—	**C400T4**
OFF pushbutton	**N**	—	**C400T5**
Red RUN pilot light	**P**	**C400GK42** ③	**C400T9** ③
Green OFF	**Q**	**C400GK41** ③	**C400T10** ③
Red RUN/green OFF pilot lights	**R**	**C400GK46** ③	**C400T11** ③
START/STOP selector switch	**S**	—	**C400T13**
With red RUN pilot light	**T**	—	—
With red RUN/green OFF lights	**U**	—	—
ON/OFF selector switch	**V**	—	**C400T14**
With red RUN pilot light	**W**	—	—
With red RUN/green OFF lights	**X**	—	—

Notes

① Type 1 non-combination, Size 4.
② Type 1 non-combination, Sizes 5 and 6; Type 3R, 4X, 12 non-combination, all sizes; all combination control.
③ Add code letter from table below to catalog number for voltage—kits only. Example: C400T9**B**.

Rating	Code Letter	Rating	Code Letter	Rating	Code Letter
120V 60 Hz	**A**	240V 60 Hz	**B**	480V 60 Hz	**C**
208V 60 Hz	**E**	380V 50 Hz	**L**	600V 60 Hz	**D**

Reversing

Flange Control Kits

For on-the-job conversion of Type1, 3R, 4X and 12 enclosed starters. Knockouts are provided on the Type1 flange. Type 3R, 4X and 12 have prepunched holes with removable hole plugs.

Factory Installed

To order factory installed pilot devices, change the ninth character of the catalog number to the alpha shown in the table below. Example: to order an **ECV1748AAH** with FOR/REV/STOP pushbuttons and 2 red pilot lights, change the **A** to a **C**, that is, ECV1748A**C**H.

Reversing Cover Control Field Kits and Factory Installation

Description	Factory Installed Flange Control Position 9 Alpha	Field Installation Kits Type 1 Non-Combination ① Catalog Number	All Others ② Catalog Number
No cover mounted pilot devices	**A**	**C400GK0**	—
FOR/REV/STOP pushbuttons	**B**	**C400GR1**	**C400T6**
With 2 red pilot lights	**C**	**C400GR14** ③	—
With 2 red/1 green pilot lights	**D**	—	—
UP/STOP/DOWN pushbuttons	**E**	**C400GR2**	—
With 2 red pilot lights	**F**	**C400GR24** ③	—
FOR/OFF/REV selector switch	**H**	—	**C400T15**
With 2 red pilot lights	**J**	—	—
With 2 red/1 green pilot lights	**K**	—	—
Two red pilot lights	**P**	**C400GK44** ③	④
One green pilot light	**Q**	**C400GK41** ③	**C400T10** ③
Two red/one green pilot lights	**R**	—	—
OPEN/OFF/CLOSE selector switch	**V**	—	**C400T16**
With 2 red pilot lights	**W**	—	—
With 2 red/1 green pilot lights	**X**	—	—

Notes

① Type 1 non-combination, Size 4.

② Type 1 non-combination, Sizes 5 and 6; Type 3R, 4X, 12 non-combination, all sizes; all combination control.

③ Add code letter from table below to catalog number for voltage—kits only. Example: C400T9**B**.

Rating	Code Letter	Rating	Code Letter	Rating	Code Letter
120V 60 Hz	**A**	240V 60 Hz	**B**	480V 60 Hz	**C**
208V 60 Hz	**E**	380V 50 Hz	**L**	600V 60 Hz	**D**

④ Order quantity two of **C400T9** ③.

Contactors

Product Selection

Class ECV01—Non-Reversing Contactor—Three-Pole

NEMA Size	Enclosed Ampere Rating	Motor Voltage	Maximum hp Rating	Magnet Coil Voltage ①	Type 1 General Purpose Catalog Number	Type 3R Rainproof Catalog Number	Type 4X Watertight and Dust-Tight Stainless Steel ② Catalog Number	Type 12 Dust-Tight Industrial Catalog Number	Component Contactor (Open) ③ Catalog Number
4	135	—	—	110/120	**ECV0141A3A**	**ECV0142A3A**	**ECV0144A3A**	**ECV0148A3A**	**CV10FN3A**
		200	40						
		230	50						
		380	75						
		460	100						
		575	100						
5	270	—	—	110/120	**ECV0151A3A**	**ECV0152A3A**	**ECV0154A3A**	**ECV0158A3A**	**CV10GN3A**
		200	75						
		230	100						
		380	150						
		460	200						
		575	200						
6	540	—	—	110/120	**ECV0161A3A**	**ECV0162A3A**	**ECV0164A3A**	**ECV0168A3A**	**CV10JN3A**
		200	150						
		230	200						
		380	300						
		460	400						
		575	400						

Notes

① Wired for separate control.

② These are the catalog numbers for Type 4X 304-Grade stainless steel, as indicated by the **seventh** digit. Example: ECV0144A3A.
To order Type 4X 316-Grade stainless steel, change that digit to **9**. To order Type 4 painted steel, change that digit to **3**.
To order non-metallic, change that digit to **5.** For details on these alternate enclosures, see **Tab 13**.

③ Alternate catalog numbers for those listed can be found in the table on **Page V10-T8-4**.

Class ECV02—Reversing Contactor—Three-Pole

NEMA Size	Enclosed Ampere Rating	Motor Voltage	Maximum hp Rating	Magnet Coil Voltage ①	Type 1 General Purpose Catalog Number	Type 3R Rainproof Catalog Number	Type 4X Watertight and Dust-Tight Stainless Steel ② Catalog Number	Type 12 Dust-Tight Industrial Catalog Number	Component Contactor (Open) ③ Catalog Number
4	135	—	—	110/120	**ECV0241A3A**	**ECV0242A3A**	**ECV0244A3A**	**ECV0248A3A**	**V211K4CJ**
		200	40						
		230	50						
		380	75						
		460	100						
		575	100						
5	270	—	—	110/120	**ECV0251A3A**	**ECV0252A3A**	**ECV0254A3A**	**ECV0258A3A**	**V211K5CJZ1**
		200	75						
		230	100						
		380	150						
		460	200						
		575	200						
6	540	—	—	110/120	**ECV0261A3A**	**ECV0262A3A**	**ECV0264A3A**	**ECV0268A3A**	**V211K6CJZ1**
		200							
		230	150						
		380	300						
		460	400						
		575	400						

Field Modification Kits

Auxiliary Electrical Contacts

Two Type J auxiliary contacts may be mounted on each side to provide four auxiliary, isolated 600V, 10A double break contacts for use in control circuits.

Auxiliary Contacts

Contact Arrangement	Catalog Number
1NO-1NC	**J11**
2NO	**J20**
2NC	**J02**

Horizontal Mechanical Interlock

Size	Catalog Number
4	**180C113G04**
5	**180C113G12**
6	**180C113G13**

Notes

① Wired for separate control.

② The catalog numbers listed in the Type 4X column are for Type 4X 304-Grade stainless steel, as indicated by the **seventh** digit. Example: ECV0244A3A. To order Type 4X 316-Grade stainless steel, change that digit to **9**. To order Type 4 painted steel, change that digit to **3**. To order non-metallic, change that digit to **5**. For details on these alternate enclosures, see **Tab 13**.

③ Alternate catalog numbers for those listed can be found in the table on **V10-T8-4**.

Non-Combination Starters

Product Selection

Class ECV05—Non-Combination Non-Reversing Starter

NEMA Size	Enclosed Ampere Rating	Motor Voltage	Maximum hp Rating	Magnet Coil Voltage ①	Type 1 General Purpose Catalog Number	Type 3R Rainproof Catalog Number	Type 4X Watertight and Dust-Tight Stainless Steel ② Catalog Number	Type 12 Dust-Tight Industrial External Reset ③ Catalog Number	Component Starter (Open) ④ Catalog Number
4	135	—	—	110/120	**ECV0541AAA**	**ECV0542AAA**	**ECV0544AAA**	**ECV0548AAA**	**AV10FNOA**
		200	40						
		230	50						
		380	75						
		460	100						
		575	100						
5	270	—	—	110/120	**ECV0551AAA**	**ECV0552AAA**	**ECV0554AAA**	**ECV0558AAA**	**AV10GNOAB**
		200	75						
		230	100						
		380	150						
		460	200						
		575	200						
6	540	—	—	110/120	**ECV0561AAA**	**ECV0562AAA**	**ECV0564AAA**	**ECV0568AAA**	**AV10JNOAB**
		200	150						
		230	200						
		380	300						
		460	400						
		575	400						

Notes

Starters do not include heater packs. Select one carton of three heater packs. For heater pack selection, see **Tab 15**.

Starters with electronic overload, see modification codes in **Tab 15**.

① Wired for separate control.

② The catalog numbers listed in the Type 4X column are for Type 4X 304-Grade stainless steel, as indicated by the **seventh** digit.
Example: ECV054**4**AAA. To order Type 4X 316-Grade stainless steel, change that digit to **9**. To order Type 4 painted steel, change that digit to **3**.
To order non-metallic, change that digit to **5**. For details on these alternate enclosures, see **Tab 13**.

③ All Type 12 enclosures are standardized with external reset. For internal reset, order modification code **R5**.

④ Alternate catalog numbers for those listed can be found in the table on **Page V10-T8-4**.

Class ECV06—Non-Combination Reversing Starter

NEMA Size	Enclosed Ampere Rating	Motor Voltage	Maximum hp Rating	Magnet Coil Voltage ①	Type 1 General Purpose Catalog Number	Type 3R Rainproof Catalog Number	Type 4X Watertight and Dust-Tight Stainless Steel ② Catalog Number	Type 12 Dust-Tight Industrial External Reset ③ Catalog Number	Component Starter (Open) Catalog Number
4	135	—	—	110/120	**ECV0641AAA**	**ECV0642AAA**	**ECV0644AAA**	**ECV0648AAA**	**V210M4CJC**
		200	40						
		230	50						
		380	75						
		460	100						
		575							
5	270	—	—	110/120	**ECV0651AAA**	**ECV0652AAA**	**ECV0654AAA**	**ECV0658AAA**	**V210M5CJC**
		200	75						
		230	100						
		380	150						
		460	200						
		575							
6	540	—	—	110/120	**ECV0661AAA**	**ECV0662AAA**	**ECV0664AAA**	**ECV0668AAA**	**V210M6CJC**
		200	150						
		230	200						
		380	300						
		460	400						
		575							

Notes

Starters do not include heater packs. Select one carton of three heater packs. For heater pack selection, see **Tab 15**.

Starters with electronic overload, see modification codes in **Tab 15**.

① Wired for separate control.

② The catalog numbers listed in the Type 4X column are for Type 4X 304-Grade stainless steel, as indicated by the **seventh** digit. Example: ECV0644AAA. To order Type 4X 316-Grade stainless steel, change that digit to **9**. To order Type 4 painted steel, change that digit to **3**. To order non-metallic, change that digit to **5**. For details on these alternate enclosures, see **Tab 13**.

③ All Type 12 enclosures are standardized with external reset. For internal reset, order modification code **R5**.

Class ECV07—Non-Combination Non-Reversing Starter with CPT

NEMA Size	Enclosed Ampere Rating	Motor Voltage	Maximum hp Rating	Magnet Coil Voltage	Type 1 General Purpose Catalog Number	Type 3R Rainproof Catalog Number	Type 4X Watertight and Dust-Tight Stainless Steel ① Catalog Number	Type 12 Dust-Tight Industrial External Reset ② Catalog Number	Component Starter (Open) ③ Catalog Number
4	135	200	40	110/120	**ECV0741EAA**	**ECV0742EAA**	**ECV0744EAA**	**ECV0748EAA**	**AV10FNOA**
		230	50		**ECV0741BAA**	**ECV0742BAA**	**ECV0744BAA**	**ECV0748BAA**	
		380	75		**ECV0741VAA**	**ECV0742VAA**	**ECV0744VAA**	**ECV0748VAA**	
		460	100		**ECV0741CAA**	**ECV0742CAA**	**ECV0744CAA**	**ECV0748CAA**	
		575			**ECV0741DAA**	**ECV0742DAA**	**ECV0744DAA**	**ECV0748DAA**	
5	270	200	75	110/120	**ECV0751EAA**	**ECV0752EAA**	**ECV0754EAA**	**ECV0758EAA**	**AV10GNOAB**
		230	100		**ECV0751BAA**	**ECV0752BAA**	**ECV0754BAA**	**ECV0758BAA**	
		380	150		**ECV0751VAA**	**ECV0752VAA**	**ECV0754VAA**	**ECV0758VAA**	
		460	200		**ECV0751CAA**	**ECV0752CAA**	**ECV0754CAA**	**ECV0758CAA**	
		575			**ECV0751DAA**	**ECV0752DAA**	**ECV0754DAA**	**ECV0758DAA**	
6	540	200	150	110/120	**ECV0761EAA**	**ECV0762EAA**	**ECV0764EAA**	**ECV0768EAA**	**AV10JNOAB**
		230	200		**ECV0761BAA**	**ECV0762BAA**	**ECV0764BAA**	**ECV0768BAA**	
		380	300		**ECV0761VAA**	**ECV0762VAA**	**ECV0764VAA**	**ECV0768VAA**	
		460	400		**ECV0761CAA**	**ECV0762CAA**	**ECV0764CAA**	**ECV0768CAA**	
		575			**ECV0761DAA**	**ECV0762DAA**	**ECV0764DAA**	**ECV0768DAA**	

Notes

Starters do not include heater packs. Select one carton of three heater packs. For heater pack selection, see **Tab 15**.

Starters with electronic overload, see modification codes in **Tab 15**.

① The catalog numbers listed in the Type 4X column are for Type 4X 304-Grade stainless steel, as indicated by the **seventh** digit.
Example: ECV074**4**EAA. To order Type 4X 316-Grade stainless steel, change that digit to **9**. To order Type 4 painted steel, change that digit to **3**.
To order non-metallic, change that digit to **5**. For details on these alternate enclosures, see **Tab 13**.

② All Type 12 enclosures are standardized with external reset. For internal reset, order modification code **R5**.

③ Alternate catalog numbers for those listed can be found in the table on **Page V10-T8-4**.

Combination Starters

Product Selection

Class ECV16—Combination Non-Reversing Starter—Fusible and Non-Fusible Disconnect

NEMA Size	Motor Voltage	Max. hp Rating Dual Element Fuses	Magnet Coil Voltage ①	Fuse Clip Amperes/ Disconnect Amperes	Type 1 General Purpose Catalog Number	Type 3R Rainproof Catalog Number	Type 4X Watertight and Dust-Tight Stainless Steel ② Catalog Number	Type 12 Dust-Tight Industrial External Reset ③④ Catalog Number	Component Starter (Open) ⑤ Catalog Number
Fusible									
4	200	40	110/120	200A	**ECV1641AAH**	**ECV1642AAH**	**ECV1644AAH**	**ECV1648AAH**	**AV10FNOA**
	230	50			**ECV1641AAH**	**ECV1642AAH**	**ECV1644AAH**	**ECV1648AAH**	
	380	75			**ECV1641AAJ**	**ECV1642AAJ**	**ECV1644AAJ**	**ECV1648AAJ**	
	460	100			**ECV1641AAJ**	**ECV1642AAJ**	**ECV1644AAJ**	**ECV1648AAJ**	
	575				**ECV1641AAJ**	**ECV1642AAJ**	**ECV1644AAJ**	**ECV1648AAJ**	
5	200	75	110/120	400A	**ECV1651AAK**	**ECV1652AAK**	**ECV1654AAK**	**ECV1658AAK**	**AV10GNOA**
	230	100			**ECV1651AAK**	**ECV1652AAK**	**ECV1654AAK**	**ECV1658AAK**	
	380	150			**ECV1651AAL**	**ECV1652AAL**	**ECV1654AAL**	**ECV1658AAL**	
	460	200			**ECV1651AAL**	**ECV1652AAL**	**ECV1654AAL**	**ECV1658AAL**	
	575				**ECV1651AAL**	**ECV1652AAL**	**ECV1654AAL**	**ECV1658AAL**	
6	200	150	110/120	600A	**ECV1661AAM**	**ECV1662AAM**	**ECV1664AAM**	**ECV1668AAM**	**AV10JNOA**
	230	200			**ECV1661AAM**	**ECV1662AAM**	**ECV1664AAM**	**ECV1668AAM**	
	380	300			**ECV1661AAN**	**ECV1662AAN**	**ECV1664AAN**	**ECV1668AAN**	
	460	400			**ECV1661AAN**	**ECV1662AAN**	**ECV1664AAN**	**ECV1668AAN**	
	575				**ECV1661AAN**	**ECV1662AAN**	**ECV1664AAN**	**ECV1668AAN**	
Non-Fusible									
4	—	—	110/120	200A	**ECV1641AAA**	**ECV1642AAA**	**ECV1644AAA**	**ECV1648AAA**	**AV10FNOA**
	200	40							
	230	50							
	380	75							
	460	100							
	575								
5	—	—	110/120	400A	**ECV1651AAA**	**ECV1652AAA**	**ECV1654AAA**	**ECV1658AAA**	**AV10GNOA**
	200	75							
	230	100							
	380	150							
	460	200							
	575								
6	—	—	110/120	600A	**ECV1661AAA**	**ECV1662AAA**	**ECV1664AAA**	**ECV1668AAA**	**AV10JNOA**
	200	150							
	230	200							
	380	300							
	460	400							
	575								

Notes

Starters do not include heater packs. Select one carton of three heater packs. For heater pack selection, see **Tab 15**.

Starters with electronic overload, see modification codes in **Tab 15**.

① Wired for separate control.

② The catalog numbers listed in the Type 4X column are for Type 4X 304-Grade stainless steel, as indicated by the **seventh** digit.
Example: ECV1644AAH. To order Type 4X 316-Grade stainless steel, change that digit to **9**. To order Type 4 painted steel, change that digit to **3**.
To order non-metallic, change that digit to **5**. For details on these alternate enclosures, see **Tab 13**.

③ All Type 12 enclosures are standardized with external reset. For internal reset, order modification code **R5**.

④ Type 12 enclosure is without safety door interlock. When safety door interlock is required, add modification code **E11**.

⑤ Alternate catalog numbers for those listed can be found in the table on **Page V10-T8-4**.

Class ECV17—Combination Reversing Starter—Fusible and Non-Fusible Disconnect

NEMA Size	Motor Voltage	Max. hp Rating Dual Element Fuses	Magnet Coil Voltage	Fuse Clip Amperes/ Disconnect Amperes	Type 1 General Purpose Catalog Number	Type 3R Rainproof Catalog Number	Type 4X Watertight and Dust-Tight Stainless Steel ① Catalog Number	Type 12 Dust-Tight Industrial External Reset ②③ Catalog Number	Component Starter (Open) Catalog Number
Fusible									
4	200	40	110/120	200A	**ECV1741AAH**	**ECV1742AAH**	**ECV1744AAH**	**ECV1748AAH**	**V210M4CJC**
	230	50			**ECV1741AAH**	**ECV1742AAH**	**ECV1744AAH**	**ECV1748AAH**	
	380	75			**ECV1741AAJ**	**ECV1742AAJ**	**ECV1744AAJ**	**ECV1748AAJ**	
	460	100			**ECV1741AAJ**	**ECV1742AAJ**	**ECV1744AAJ**	**ECV1748AAJ**	
	575				**ECV1741AAJ**	**ECV1742AAJ**	**ECV1744AAJ**	**ECV1748AAJ**	
5	200	75	110/120	400A	**ECV1751AAK**	**ECV1752AAK**	**ECV1754AAK**	**ECV1758AAK**	**V210M5CJC**
	230	100			**ECV1751AAK**	**ECV1752AAK**	**ECV1754AAK**	**ECV1758AAK**	
	380	150			**ECV1751AAL**	**ECV1752AAL**	**ECV1754AAL**	**ECV1758AAL**	
	460	200			**ECV1751AAL**	**ECV1752AAL**	**ECV1754AAL**	**ECV1758AAL**	
	575				**ECV1751AAL**	**ECV1752AAL**	**ECV1754AAL**	**ECV1758AAL**	
6	200	150	110/120	600A	**ECV1761AAM**	**ECV1762AAM**	**ECV1764AAM**	**ECV1768AAM**	**V210M6CJC**
	230	200			**ECV1761AAM**	**ECV1762AAM**	**ECV1764AAM**	**ECV1768AAM**	
	380	300			**ECV1761AAN**	**ECV1762AAN**	**ECV1764AAN**	**ECV1768AAN**	
	460	400			**ECV1761AAN**	**ECV1762AAN**	**ECV1764AAN**	**ECV1768AAN**	
	575				**ECV1761AAN**	**ECV1762AAN**	**ECV1764AAN**	**ECV1768AAN**	
Non-Fusible									
4	—	—	110/120	200A	**ECV1741AAA**	**ECV1742AAA**	**ECV1744AAA**	**ECV1748AAA**	**V210M4CJC**
	200	40							
	230	50							
	380	75							
	460	100							
	575								
5	—	—	110/120	400A	**ECV1751AAA**	**ECV1752AAA**	**ECV1754AAA**	**ECV1758AAA**	**V210M5CJC**
	200	75							
	230	100							
	380	150							
	460	200							
	575								
6	—	—	110/120	600A	**ECV1761AAA**	**ECV1762AAA**	**ECV1764AAA**	**ECV1768AAA**	**V210M6CJC**
	200	150							
	230	200							
	380	300							
	460	400							
	575								

Notes

Starters do not include heater packs. Select one carton of three heater packs. For heater pack selection, see **Tab 15**.

Starters with electronic overload, see modification codes in **Tab 15**.

① The catalog numbers listed in the Type 4X column are for Type 4X 304-Grade stainless steel, as indicated by the **seventh** digit.
Example: ECV174**4**AAH. To order Type 4X 316-Grade stainless steel, change that digit to **9**. To order Type 4 painted steel, change that digit to **3**.
To order non-metallic, change that digit to **5**. For details on these alternate enclosures, see **Tab 13**.

② All Type 12 enclosures are standardized with external reset. For internal reset, order modification code **R5**.

③ Type 12 enclosure is without safety door interlock. When safety door interlock is required, add modification code **E11**.

Class ECV18—Combination Non-Reversing Starter—Fusible and Non-Fusible Disconnect with CPT

NEMA Size	Motor Voltage	Max. hp Rating Dual Element Fuses	Magnet Coil Voltage	Fuse Clip Amperes/ Disconnect Amperes	Type 1 General Purpose Catalog Number	Type 3R Rainproof Catalog Number	Type 4X Watertight and Dust-Tight Stainless Steel ① Catalog Number	Type 12 Dust-Tight Industrial External Reset ②③ Catalog Number	Component Starter (Open) ④ Catalog Number
Fusible									
4	200	40	110/120	200A	**ECV1841EAH**	**ECV1842EAH**	**ECV1844EAH**	**ECV1848EAH**	**AV10FNOA**
	230	50			**ECV1841BAH**	**ECV1842BAH**	**ECV1844BAH**	**ECV1848BAH**	
	380	75			**ECV1841VAJ**	**ECV1842VAJ**	**ECV1844VAJ**	**ECV1848VAJ**	
	460	100			**ECV1841CAJ**	**ECV1842CAJ**	**ECV1844CAJ**	**ECV1848CAJ**	
	575				**ECV1841DAJ**	**ECV1842DAJ**	**ECV1844DAJ**	**ECV1848DAJ**	
5	200	75	110/120	400A	**ECV1851EAK**	**ECV1852EAK**	**ECV1854EAK**	**ECV1858EAK**	**AV10GNOA**
	230	100			**ECV1851BAK**	**ECV1852BAK**	**ECV1854BAK**	**ECV1858BAK**	
	380	150			**ECV1851VAL**	**ECV1852VAL**	**ECV1854VAL**	**ECV1858VAL**	
	460	200			**ECV1851CAL**	**ECV1852CAL**	**ECV1854CAL**	**ECV1858CAL**	
	575				**ECV1851DAL**	**ECV1852DAL**	**ECV1854DAL**	**ECV1858DAL**	
6	200	150	110/120	600A	**ECV1861EAM**	**ECV1862EAM**	**ECV1864EAM**	**ECV1868EAM**	**AV10JNOA**
	230	200			**ECV1861BAM**	**ECV1862BAM**	**ECV1864BAM**	**ECV1868BAM**	
	380	300			**ECV1861VAN**	**ECV1862VAN**	**ECV1864VAN**	**ECV1868VAN**	
	460	400			**ECV1861CAN**	**ECV1862CAN**	**ECV1864CAN**	**ECV1868CAN**	
	575				**ECV1861DAN**	**ECV1862DAN**	**ECV1864DAN**	**ECV1868DAN**	
Non-Fusible									
4	200	40	110/120	200A	**ECV1841EAA**	**ECV1842EAA**	**ECV1844EAA**	**ECV1848EAA**	**AV10FNOA**
	230	50			**ECV1841BAA**	**ECV1842BAA**	**ECV1844BAA**	**ECV1848BAA**	
	380	75			**ECV1841VAA**	**ECV1842VAA**	**ECV1844VAA**	**ECV1848VAA**	
	460	100			**ECV1841CAA**	**ECV1842CAA**	**ECV1844CAA**	**ECV1848CAA**	
	575				**ECV1841DAA**	**ECV1842DAA**	**ECV1844DAA**	**ECV1848DAA**	
5	200	75	110/120	400A	**ECV1851EAA**	**ECV1852EAA**	**ECV1854EAA**	**ECV1858EAA**	**AV10GNOA**
	230	100			**ECV1851BAA**	**ECV1852BAA**	**ECV1854BAA**	**ECV1858BAA**	
	380	150			**ECV1851VAA**	**ECV1852VAA**	**ECV1854VAA**	**ECV1858VAA**	
	460	200			**ECV1851CAA**	**ECV1852CAA**	**ECV1854CAA**	**ECV1858CAA**	
	575				**ECV1851DAA**	**ECV1852DAA**	**ECV1854DAA**	**ECV1858DAA**	
6	200	150	110/120	600A	**ECV1861EAA**	**ECV1862EAA**	**ECV1864EAA**	**ECV1868EAA**	**AV10JNOA**
	230	200			**ECV1861BAA**	**ECV1862BAA**	**ECV1864BAA**	**ECV1868BAA**	
	380	300			**ECV1861VAA**	**ECV1862VAA**	**ECV1864VAA**	**ECV1868VAA**	
	460	400			**ECV1861CAA**	**ECV1862CAA**	**ECV1864CAA**	**ECV1868CAA**	
	575				**ECV1861DAA**	**ECV1862DAA**	**ECV1864DAA**	**ECV1868DAA**	

Notes

Starters do not include heater packs. Select one carton of three heater packs. For heater pack selection, see **Tab 15**.

Starters with electronic overload, see modification codes in **Tab 15**.

① The catalog numbers listed in the Type 4X column are for Type 4X 304-Grade stainless steel, as indicated by the **seventh** digit. Example: ECV1844EAH. To order Type 4X 316-Grade stainless steel, change that digit to **9**. To order Type 4 painted steel, change that digit to **3**. To order non-metallic, change that digit to **5**. For details on these alternate enclosures, see **Tab 13**.

② All Type 12 enclosures are standardized with external reset. For internal reset, order modification code **R5**.

③ Type 12 enclosure is without safety door interlock. When safety door interlock is required, add modification code **E11**.

④ Alternate catalog numbers for those listed can be found in the table on **Page V10-T8-4**.

Class ECV22—Combination Non-Reversing Starter—Circuit Breaker

NEMA Size	Motor Voltage	Max. hp Rating	Magnet Coil Voltage ①	Circuit Breaker Size	Type 1 General Purpose Catalog Number	Type 3R Rainproof Catalog Number	Type 4X Watertight and Dust-Tight Stainless Steel ② Catalog Number	Type 12 Dust-Tight Industrial External Reset ③④ Catalog Number	Component Starter (Open) ⑤ Catalog Number
4	200	40	110/120	150A	**ECV2241AAH**	**ECV2242AAH**	**ECV2244AAH**	**ECV2248AAH**	**AV10FNOA**
	230	50							
	380	75							
	460	100							
	575								
5	200	60	110/120	250A	**ECV2251AAJ**	**ECV2252AAJ**	**ECV2254AAJ**	**ECV2258AAJ**	**AV10GNOA**
	230	75							
	460	150							
	575	200							
	200	75	110/120	400A	**ECV2251AAK**	**ECV2252AAK**	**ECV2254AAK**	**ECV2258AAK**	**AV10GNOA**
	230	100							
	380	150							
	460	200							
6	200	100	110/120	600A	**ECV2261AAL**	**ECV2262AAL**	**ECV2264AAL**	**ECV2268AAL**	**AV10JNOA**
	230	150							
	460	300							
	575								
	230	200	110/120	800A	**ECV2261AAM**	**ECV2262AAM**	**ECV2264AAM**	**ECV2268AAM**	**AV10JNOA**
	460	400							
	575								

Notes

Starters do not include heater packs. Select one carton of three heater packs. For heater pack selection, see **Tab 15**.

Starters with electronic overload, see modification codes in **Tab 15**.

① Wired for separate control.

② The catalog numbers listed in the Type 4X column are for Type 4X 304-Grade stainless steel, as indicated by the **seventh** digit.
Example: ECV224**4**AAH. To order Type 4X 316-Grade stainless steel, change that digit to **9**. To order Type 4 painted steel, change that digit to **3**.
To order non-metallic, change that digit to **5**. For details on these alternate enclosures, see **Tab 13**.

③ All Type 12 enclosures are standardized with external reset. For internal reset, order modification code **R5**.

④ Type 12 enclosure is without safety door interlock. When safety door interlock is required, add modification code **E11**.

⑤ Alternate catalog numbers for those listed can be found in the table on **Page V10-T8-4**.

Class ECV23—Combination Reversing Starter—Circuit Breaker

NEMA Size	Motor Voltage	Max. hp Rating	Magnet Coil Voltage ①	Circuit Breaker Size	Type 1 General Purpose Catalog Number	Type 3R Rainproof Catalog Number	Type 4X Watertight and Dust-Tight Stainless Steel ② Catalog Number	Type 12 Dust-Tight Industrial External Reset ③④ Catalog Number	Component Starter (Open) Catalog Number
4	200	40	110/120	150A	**ECV2341AAH**	**ECV2342AAH**	**ECV2344AAH**	**ECV2348AAH**	**V210M4CJC**
	230	50							
	380	75							
	460	100							
	575								
5	200	60	110/120	250A	**ECV2351AAJ**	**ECV2352AAJ**	**ECV2354AAJ**	**ECV2358AAJ**	**V210M5CJC**
	230	75							
	460	150							
	575	200							
	200	75	110/120	400A	**ECV2351AAK**	**ECV2352AAK**	**ECV2354AAK**	**ECV2358AAK**	**V210M5CJC**
	230	100							
	380	150							
	460	200							
6	200	100	110/120	600A	**ECV2361AAL**	**ECV2362AAL**	**ECV2364AAL**	**ECV2368AAL**	**V210M6CJC**
	230	150							
	460	300							
	575								
	230	200	110/120	800A	**ECV2361AAM**	**ECV2362AAM**	**ECV2364AAM**	**ECV2368AAM**	**V210M6CJC**
	460	400							
	575								

Notes

Starters do not include heater packs. Select one carton of three heater packs. For heater pack selection, see **Tab 15**.

Starters with electronic overload, see modification codes in **Tab 15**.

① Wired for separate control.

② The catalog numbers listed in the Type 4X column are for Type 4X 304-Grade stainless steel, as indicated by the **seventh** digit.
Example: ECV2344AAH. To order Type 4X 316-Grade stainless steel, change that digit to **9**. To order Type 4 painted steel, change that digit to **3**.
To order non-metallic, change that digit to **5**. For details on these alternate enclosures, see **Tab 13**.

③ All Type 12 enclosures are standardized with external reset. For internal reset, order modification code **R5**.

④ Type 12 enclosure is without safety door interlock. When safety door interlock is required, add modification code **E11**.

Class ECV24—Combination Non-Reversing Starter—Circuit Breaker with CPT

NEMA Size	Motor Voltage	Max. hp Rating	Magnet Coil Voltage	Circuit Breaker Size	Type 1 General Purpose Catalog Number	Type 3R Rainproof Catalog Number	Type 4X Watertight and Dust-Tight Stainless Steel ① Catalog Number	Type 12 Dust-Tight Industrial External Reset ②③ Catalog Number	Component Starter (Open) ④ Catalog Number
4	200	40	110/120	150A	**ECV2441EAH**	**ECV2442EAH**	**ECV2444EAH**	**ECV2448EAH**	**AV10FNOA**
	230	50			**ECV2441BAH**	**ECV2442BAH**	**ECV2444BAH**	**ECV2448BAH**	
	380	75			**ECV2441VAH**	**ECV2442VAH**	**ECV2444VAH**	**ECV2448VAH**	
	460	100			**ECV2441CAH**	**ECV2442CAH**	**ECV2444CAH**	**ECV2448CAH**	
	575				**ECV2441DAH**	**ECV2442DAH**	**ECV2444DAH**	**ECV2448DAH**	
5	200	60	110/120	250A	**ECV2451EAJ**	**ECV2452EAJ**	**ECV2454EAJ**	**ECV2458EAJ**	**AV10GNOA**
	230	75			**ECV2451BAJ**	**ECV2452BAJ**	**ECV2454BAJ**	**ECV2458BAJ**	
	460	150			**ECV2451CAJ**	**ECV2452CAJ**	**ECV2454CAJ**	**ECV2458CAJ**	
	575	200			**ECV2451DAJ**	**ECV2452DAJ**	**ECV2454DAJ**	**ECV2458DAJ**	
	200	75	110/120	400A	**ECV2451EAK**	**ECV2452EAK**	**ECV2454EAK**	**ECV2458EAK**	**AV10GNOA**
	230	100			**ECV2451BAK**	**ECV2452BAK**	**ECV2454BAK**	**ECV2458BAK**	
	380	150			**ECV2451VAK**	**ECV2452VAK**	**ECV2454VAK**	**ECV2458VAK**	
	460	200			**ECV2451CAK**	**ECV2452CAK**	**ECV2454CAK**	**ECV2458CAK**	
6	200	100	110/120	600A	**ECV2461EAL**	**ECV2462EAL**	**ECV2464EAL**	**ECV2468EAL**	**AV10JNOA**
	230	150			**ECV2461BAL**	**ECV2462BAL**	**ECV2464BAL**	**ECV2468BAL**	
	460	300			**ECV2461CAL**	**ECV2462CAL**	**ECV2464CAL**	**ECV2468CAL**	
	575				**ECV2461DAL**	**ECV2462DAL**	**ECV2464DAL**	**ECV2468DAL**	
	230	200	110/120	800A	**ECV2461BAM**	**ECV2462BAM**	**ECV2464BAM**	**ECV2468BAM**	**AV10JNOA**
	460	400			**ECV2461CAM**	**ECV2462CAM**	**ECV2464CAM**	**ECV2468CAM**	
	575				**ECV2461DAM**	**ECV2462DAM**	**ECV2464DAM**	**ECV2468DAM**	

Notes

Starters do not include heater packs. Select one carton of three heater packs. For heater pack selection, see **Tab 15**.

Starters with electronic overload, see modification codes in **Tab 15**.

① The catalog numbers listed in the Type 4X column are for Type 4X 304-Grade stainless steel, as indicated by the **seventh** digit.
Example: ECV244**4**EAH. To order Type 4X 316-Grade stainless steel, change that digit to **9**. To order Type 4 painted steel, change that digit to **3**.
To order non-metallic, change that digit to **5**. For details on these alternate enclosures, see **Tab 13**.

② All Type 12 enclosures are standardized with external reset. For internal reset, order modification code **R5**.

③ Type 12 enclosure is without safety door interlock. When safety door interlock is required, add modification code **E11**.

④ Alternate catalog numbers for those listed can be found in the table on **Page V10-T8-4**.

Wiring Diagrams

Typical Wiring Diagrams

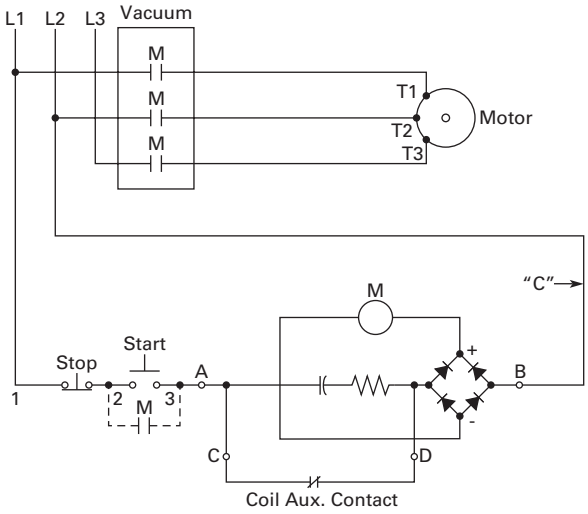

Size 4 Contactor

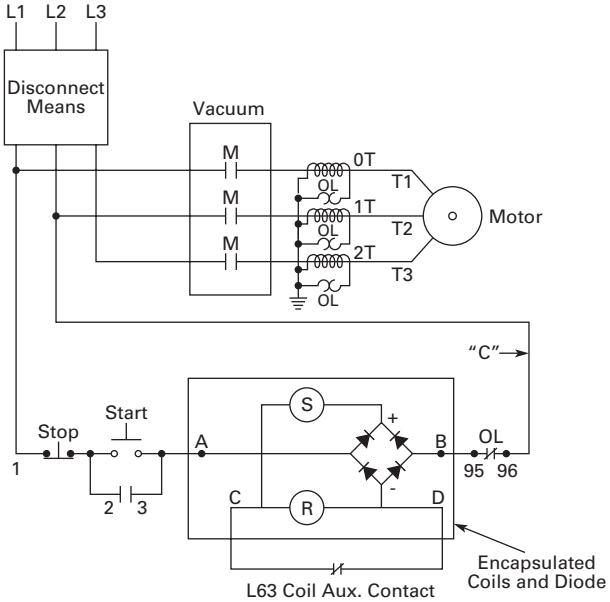

Sizes 5 and 6 Starter