# M-Max series adjustable frequency AC drives

Powering Business Worldwide

EATON

*Powering Business Worldwide*

There's a certain energy at Eaton. It's the power of uniting some of the world's most respected names to build a brand you can trust to meet every power management need. The energy created supports our commitment to powering business worldwide.

Eaton is dedicated to ensuring that reliable, efficient and safe power is available when it's needed most. With unparalleled knowledge of electrical power management across industries, experts at Eaton deliver customized, integrated solutions to solve our customers' most critical challenges. **Eaton.com/Electrical.**

All of the above are trademarks of Eaton Corporation or its affiliates. •Eaton has a license to use the Westinghouse brand name in Asia Pacific. ©2012 Eaton Corporation.

M-Max Series Drives for Machinery Applications

## Contents

***Description*** ***Page***

M-Max Series Adjustable Frequency AC Drive
Catalog Number Selection....1
Product Selection....2
Accessories....2
Technical Data and Specifications....3
Dimensions....6

# M-Max Series Drives for Machinery Applications

## Product Description

Eaton's M-Max™ Series Sensorless Vector Adjustable Frequency AC Drives are the next generation of drives specifically engineered for today's machinery applications. These microprocessor-based drives have standard features that can be programmed to tailor the drive's performance to suit a wide variety of application requirements. The M-Max product line uses a 32-bit microprocessor and insulated gate bipolar transistors (IGBTs) that provide quiet motor operation, high motor efficiency, and smooth lowspeed performance. The size and simplicity of the M-Max make it ideal for hassle-free installation. Models rated at 575 volts, three-phase, 50/60 Hz are available in sizes ranging from 1 to 7-1/2 hp. Models rated at 480 volts, three-phase, 50/60 Hz are available in sizes ranging from 1/2 to 10 hp. Models rated at 240 volts, single- or three-phase, 50/60 Hz are available in sizes ranging from 1/4 to 3 hp. Models rated at 115 volts, single-phase, 50/60 Hz are available in the 1/4 to 1-1/2 hp size range.

The standard drive includes a digital display, and operating and programming keys on a visually appealing, efficient application programming interface. The display provides drive monitoring, as well as adjustment and diagnostic information. The keys are used for digital adjustment and programming of the drive, as well as for operator control. Separate terminal blocks for control and power wiring are provided for customer connections.

## Features

- Ease of use—preset application macros, startup wizard, diagnostic capabilities
- Compact, space-saving design
- Rugged and reliable—150% for one minute, 50C rated, conformal coated boards
- DIN rail and screw mountable
- Side-by-side installation
- Industry leading efficiency delivers energy savings to the customer
- Integrated EMC filters make the unit suitable for commercial and industrial networks
- Available in the enclosure class IP20 as standard, options for IP21 and NEMA® 1
- Brake chopper as standard in three-phase, applications of frames 2 (FS2) and larger
- Temperature-controlled fan
- RS-485/Modbus® as standard
- PID controller as standard
- Several fieldbus options

## Standards and Certifications

***Product***

- Complies with EN61800-3 (2004)

***Safety*** ①

- 61800-5-1
- EN60204-1
- CE
- UL
- cUL
- IEC
- RoHS compliant

***EMC (At Default Settings)***

- EMC Category C2, C3, and C4 (Level H): With an internal RFI filter option

***Note***

① See unit nameplate for more detailed approvals.

## Catalog Number Selection

**MMX 1 1 AA 1D1 F 0 – 0**

**Description**
**MMX** = Base catalog number

**Phase**
**1** = Single-phase
**3** = Three-phase

**Voltage**
**1** = 120V **4** = 480V
**2** = 230V **5** = 575V

**Software Designation Series**
AA

**Output Current**
**1D6** = 1.6A
**010** = 10A

**EMC Filter**
**F** = Filter
**N** = No filter

**Enclosure Class**
**0** = NEMA 0 or IP20

**Option**
**0** = Full version

## Product Selection

M-Max

### M-Max Basic Controller

| kW① | Volts② | 100% Continuous Current $I_N$ (A) | Nominal Input Current (A) | Frame Size | Catalog Number |
|---|---|---|---|---|---|
| 0.25 | 100–120V single-phase in 230V three-phase out | 1.7 | 9.2 | FS2 | **MMX11AA1D7N0-0③** |
| 0.37 | | 2.4 | 11.6 | | **MMX11AA2D4N0-0③** |
| 0.55 | | 2.8 | 12.4 | | **MMX11AA2D8N0-0③** |
| 0.75 | | 3.7 | 15 | | **MMX11AA3D7N0-0③** |
| 1.10 | | 4.8 | 16.5 | FS3 | **MMX11AA4D8N0-0③** |
| 0.25 | 200–240V single-phase in 230V three-phase out | 1.7 | 4.2 | FS1 | **MMX12AA1D7F0-0** |
| 0.37 | | 2.4 | 5.7 | | **MMX12AA2D4F0-0** |
| 0.55 | | 2.8 | 6.6 | | **MMX12AA2D8F0-0** |
| 0.75 | | 3.7 | 8.3 | FS2 | **MMX12AA3D7F0-0** |
| 1.10 | | 4.8 | 11.2 | | **MMX12AA4D8F0-0** |
| 1.50 | | 7 | 14.1 | | **MMX12AA7D0F0-0** |
| 2.20 | | 9.6 | 15.8 | FS3 | **MMX12AA9D6F0-0** |
| 0.25 | 200–240V three-phase in 230V three-phase out | 1.7 | 2.7 | FS1 | **MMX32AA1D7N0-0③** |
| 0.37 | | 2.4 | 3.5 | | **MMX32AA2D4N0-0③** |
| 0.55 | | 2.8 | 3.8 | | **MMX32AA2D8N0-0③** |
| 0.75 | | 3.7 | 4.3 | FS2 | **MMX32AA3D7N0-0③** |
| 1.10 | | 4.8 | 6.8 | | **MMX32AA4D8N0-0③** |
| 1.50 | | 7 | 8.4 | | **MMX32AA7D0N0-0③** |
| 2.20 | | 11 | 13.4 | FS3 | **MMX32AA011N0-0③** |
| 0.37 | 380–480V three-phase in 460V three-phase out | 1.3 | 2.2 | FS1 | **MMX34AA1D3F0-0** |
| 0.55 | | 1.9 | 2.8 | | **MMX34AA1D9F0-0** |
| 0.75 | | 2.4 | 3.2 | | **MMX34AA2D4F0-0** |
| 1.10 | | 3.3 | 4 | FS2 | **MMX34AA3D3F0-0** |
| 1.50 | | 4.3 | 5.6 | | **MMX34AA4D3F0-0** |
| 2.20 | | 5.6 | 7.3 | | **MMX34AA5D6F0-0** |
| 3.00 | | 7.6 | 9.6 | FS3 | **MMX34AA7D6F0-0** |
| 4.00 | | 9 | 11.5 | | **MMX34AA9D0F0-0** |
| 5.50 | | 12 | 14.9 | | **MMX34AA012F0-0** |
| 7.50 | | 14 | 18.7 | | **MMX34AA014F0-0** |
| 0.75 | 575V three-phase in 575V three-phase out | 1.7 | 2.0 | FS3 | **MMX35AA1D7N0-0③** |
| 1.10 | | 2.7 | 3.6 | | **MMX35AA2D7N0-0③** |
| 1.50 | | 3.9 | 5.0 | | **MMX35AA3D9N0-0③** |
| 2.20 | | 6.1 | 7.6 | | **MMX35AA6D1N0-0③** |
| 3.00 | | 9.0 | 10.4 | | **MMX35AA9D0N0-0③** |

***Notes***

① kW ratings are based on the use of a 240V, 460V, and 575V NEMA B, four- or six-pole squirrel cage induction motor and are for reference only. Units are to be selected such that the motor current is less than or equal to the MMX rated continuous output current.

② For 208V, 380V, or 415V applications, select the unit such that the motor current is less than or equal to the MMX rated continuous output current.

③ For MMX11_, MMX32_, and MMX35_, there are no options for units with filters.

## M-Max Copy/Paste Module

| Description | Catalog Number |
|---|---|
| Module is plugged onto the front of the drive to provide: upload/download of all parameters, direct link to a PC via USB interface for parameter assignment via MaxConnect software, and copying of parameters for a series of devices or when exchanging devices. NoPCrequired | **MMX-COM-PC** |

## Kits[1]

| Description | Catalog Number |
|---|---|
| Type 1 and IP21 kit for frame 1 | **MMX-IP21-FS1** |
| Type 1 and IP21 kit for frame 2 | **MMX-IP21-FS2** |
| Type 1 and IP21 kit for frame 3 | **MMX-IP21-FS3** |

## Optional Communication Modules

| Description | Catalog Number |
|---|---|
| Communication adapter kit | **MMX-NET-XA** |
| CANopen network card | **XMX-NET-CO-A** |
| PROFIBUS DP network card with serial connection | **XMX-NET-PS-A** |
| PROFIBUS DP network card with Sub-D connection | **XMX-NET-PD-A** |
| DeviceNet network card | **XMX-NET-DN-A** |

***Notes***

[1] Type 1 kit provides conduit entry plate.

# M-Max Series Adjustable Frequency AC Drives

Technical Data and Specifications

## Ratings

### M-Max Basic Controller IP20 Standard Ratings

| Description | Specification |
|---|---|
| **Protections** | |
| Overcurrent protection | Trip limit 4.0 x $I_H$ instantaneously |
| Overvoltage protection | 115/230V series: 437 Vdc; 400V series: 874 Vdc; 575V series: 1048 Vdc trip level |
| Undervoltage protection | 115/230V series: 183 Vdc; 400V series: 333 Vdc; 575V series: 460 Vdc trip level |
| Ground fault protection | Ground fault is tested before every start. In case of ground fault in motor or motor cable, only the frequency converter is protected |
| Overtemperature protection | Yes |
| Motor overload protection | Yes |
| Motor stall protection | Yes |
| Motor underload protection | Yes |

### Programmable Parameters

| Description |
|---|
| Application macros: basic, pump, fan and high load (hoist) |
| Programmable start/stop and reverse signal logic (sinking or sourcing) |
| Reference scaling |
| Programmable start and stop functions |
| DC-brake at start and stop |
| Programmable V/Hz curve |
| Adjustable switching frequency |
| Autorestart function after fault |
| Protections and supervisions (all fully programmable; off, warning, fault) |
| Current signal input fault |
| External fault |
| Fieldbus communication |
| Eight preset speeds |
| Analog input range selection, signal scaling and filtering |
| PID controller |
| Skip frequencies |

## Specifications

### M-Max Series Drives

| Description | Specification |
|---|---|
| **Input Ratings** | |
| Input voltage ($V_{in}$) | +10%/–15% (575V units: +15%/–15%) |
| Input frequency ($f_{in}$) | 50/60 Hz (variation up to 45–66 Hz) |
| Connection to power | Once per minute or less (typical operation) |
| **Output Ratings** | |
| Output voltage | 0 to $V_{in}$ ① |
| Continuous output current | Continuous rated current $I_N$ at ambient temperature max. 122°F (50°C), overload 1.5 x $I_N$ max. 1 min/10 min |
| Output frequency | 0 to 320 Hz |
| Frequency resolution | 0.01 Hz |
| Initial output current ($I_H$) | Current 2 x $I_N$ for 2 seconds in every 20-second period<br>Torque depends on motor |
| **Control Characteristics** | |
| Control method | Frequency control (V/Hz) open loop or sensorless vector control |
| Switching frequency | 1.5 to 16 kHz; default 6 kHz |
| Frequency reference | Analog input: resolution 0.1% (10-bit), accuracy ± 1% V/Hz<br>Panel reference: resolution 0.01 Hz |
| Field weakening point | 30 to 320 Hz |
| Acceleration time | 0 to 3000 sec |
| Deceleration time | 0 to 3000 sec |
| Braking torque | DC brake: 30% x $T_n$ (without brake option) |
| **Brake Resistor (Minimum Values)** ② | |
| 230V Series | FS2 35 ohms and FS3 26 ohms |
| 400V Series | FS2 75 ohms and FS3 54 ohms |
| 575V Series | FS3 103 ohms |
| **Ambient Conditions** | |
| Ambient operating temperature | 14°F (–10°C), no frost to 122°F (+50°C): Rated loadability $I_N$ |
| Storage temperature | –40°F (–40°C) to 158°F (70°C) |
| Relative humidity | 0 to 95% RH, noncondensing, non-corrosive, no dripping water |
| Air quality | Chemical vapors: IEC 721-3-3, unit in operation, Class 3C2; Mechanical particles: IEC 721-3-3, unit in operation, Class 3S2 |
| Altitude | 100% load capacity (no derating) up to 3280 ft (1000m);<br>1% derating for each 328 ft (100m) above 3280 ft (1000m);<br>max. 6560 ft (2000m) |
| Vibration | EN 60068-2-6; 3 to 150 Hz, displacement amplitude 1 mm (peak) at 3 to 15.8 Hz, max. acceleration amplitude 1G at 15.8 to 150 Hz |
| Shock | EN 50178, IEC 68-2-27 UPS Drop test (for applicable UPS weights); storage and shipping: max. 15G, 11 ms (in package) |
| Enclosure class | IP20 |

***Notes***

① Exception: 115V single-phase in, 230V three-phase out.

② Only three-phase FS2 and FS3 drives are equipped with brake chopper circuit.

### I/O Specifications

- Digital inputs DI1–DI6 are freely programmable. The user can assign multiple functions to a single input
- Digital, relay, and analog outputs are freely programmable

***Includes:***

- Six digital inputs
- Two analog inputs
  - 4–20 mA
  - 0–10V
- One analog output
- One digital output
- Two relay outputs
- RS-485 interface

### Reliability

- Pretested components: standard
- Computerized testing: standard
- Final test with full load: standard
- Conformal-coated boards
- 50°C rated
- 150% for one minute/ 10 mm
- 200% for two seconds/ 20 sec.
- Eaton Electrical Services and Systems: national network of AF drive specialists

### M-Max I/O Interface

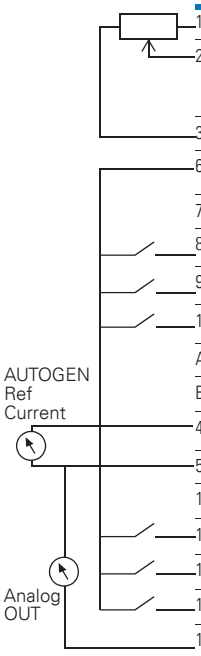


| Terminal | | Signal | Factory Preset | Description |
|---|---|---|---|---|
| 1 | +10V | Ref. output voltage | — | Maximum load 10 mA |
| 2 | AI1 | Analog signal in 1 | Freq. reference P) | 0–+10V Ri = 200k ohms [min.] |
| 3 | GND | I/O signal ground | — | — |
| 6 | 24V | 24V output for DIs | — | ±20%, max. load 50 mA |
| 7 | GND | I/O signal ground | — | — |
| 8 | DI1 | Digital input 1 | Start forward P) | 0–+30V Ri = 12k ohms min. |
| 9 | DI2 | Digital input 2 | Start reverse P) | — |
| 10 | DI3 | Digital input 3 | Preset speed P) | — |
| A | A | RS-485 signal A | FB communication | — |
| B | B | RS-485 signal B | FB communication | — |
| 4 | AI2 | Analog signal in 2 | PI actual value P) | 0[4]–20 mA, Ri = 200k ohms |
| 5 | GND | I/O signal ground | — | — |
| 13 | GND | I/O signal ground | — | — |
| 14 | DI4 | Digital input 4 | Preset speed B1 P) | 0–+30V Ri = 12k ohms min. |
| 15 | DI5 | Digital input 5 | Fault reset P) | 0–+30V Ri = 12k ohms min. |
| 16 | DI6 | Digital input 6 | Disable PI contr. P) | 0–+30V Ri = 12k ohms min. |
| 18 | AO | Analog output | Output frequency P) | 0(2)–10V, RL = 500 ohms |
| 20 | DO | Digital signal out | Active = READY P) | Open collector, max. load 48V/50 mA |
| 22 | RO11 | Relay out 1 | Active = RUN P) | Max. switching load: 250 Vac/2A or 250 Vdc/0.4A |
| 23 | RO12 | | | |
| 24 | RO21 | Relay out 2 | Active = FAULT P) | Max. switching load: 250 Vac/2A or 250 Vdc/0.4A |
| 25 | RO22 | | | |
| 26 | RO23 | | | |

***Note***

P) Parameter-selectable function.

# M-Max Series Adjustable Frequency AC Drives

Dimensions

Approximate Dimensions in Inches (mm)

## M-Max Drives

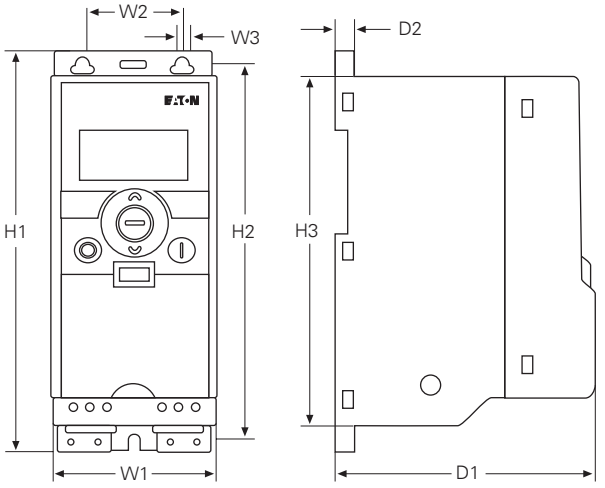


| Frame Type | H1 | H2 | H3 | W1 | W2 | W3 | D1 | D2 | Weight Lbs (kg) |
|---|---|---|---|---|---|---|---|---|---|
| FS1 | 6.16 (156.5) | 5.79 (147.0) | 5.40 (137.3) | 2.58 (65.5) | 1.49 (37.8) | 0.17 (4.5) | 3.88 (98.5) | 0.27 (7.0) | 1.213 (0.550) |
| FS2 | 7.68 (195.0) | 7.20 (183.0) | 6.69 (170.0) | 3.54 (90.0) | 2.46 (62.5) | 0.22 (5.5) | 4.00 (101.5) | 0.27 (7.0) | 1.543 (0.699) |
| FS3 | 10.33 (262.5) | 9.93 (252.3) | 9.50 (241.3) | 3.94 (100.0) | 2.95 (75.0) | 0.22 (5.5) | 4.27 (108.5) | 0.27 (7.0) | 2.183 (0.990) |

## NEMA 1/IP21 M-Max Drives and Communication Adapter Kit

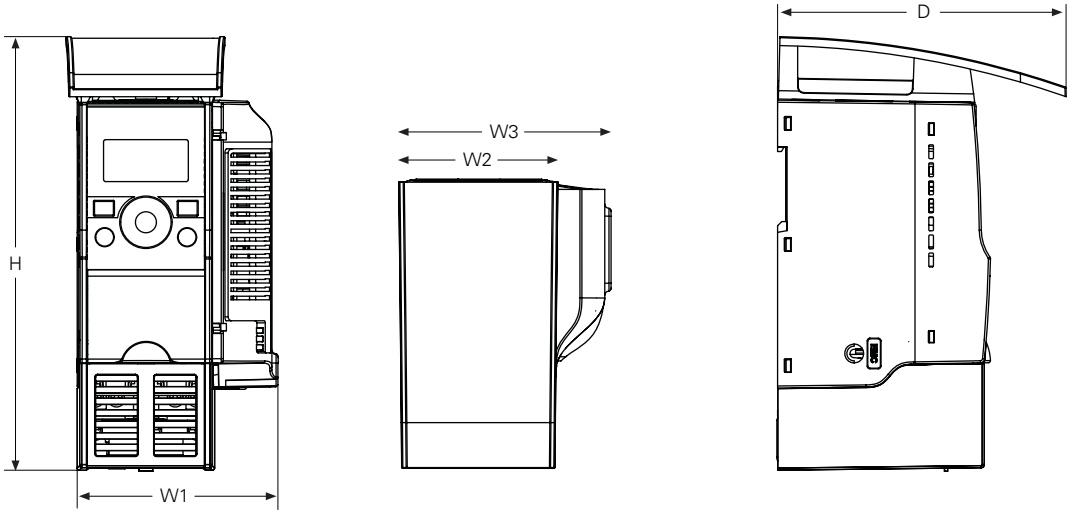


| Frame Type | H | W1 | W2 | W3 | D |
|---|---|---|---|---|---|
| FS1 | 8.14 (206.7) | 3.77 (95.7) | 2.99 (75.9) | 3.98 (101.2) | 5.41 (137.5) |
| FS2 | 9.90 (251.5) | 4.72 (120.0) | 3.97 (100.8) | 4.94 (125.5) | 5.68 (144.2) |
| FS3 | 12.26 (311.5) | 5.12 (130.1) | 4.36 (110.8) | 5.33 (135.3) | 6.32 (160.5) |

Eaton is dedicated to ensuring that reliable, efficient and safe power is available when it's needed most. With unparalleled knowledge of electrical power management across industries, experts at Eaton deliver customized, integrated solutions to solve our customers' most critical challenges.

Our focus is on delivering the right solution for the application. But, decision makers demand more than just innovative products. They turn to Eaton for an unwavering commitment to personal support that makes customer success a top priority. For more information, **visit www.eaton.com/electrical.**

**Electrical Sector Asia Pacific**
No.3, Lane 280, Linhong Road,
Changning District, Shanghai

Eaton Industries Pte Ltd
Electrical Sector
4 Loyang Lane #04-01/02
Singapore 508914

Powering Business Worldwide

© 2012 Eaton Corporation
All Rights Reserved
Printed in Singapore
M-MAX-SEA-EN
July 2012

Eaton is a registered trademark of Eaton Corporation.

All other trademarks are property of their respective owners.