Small without compromise

Introducing the T-VAC/T-VACC drawout type and T-VACR/T-VACRC fixed type medium voltage circuit breakers with a short-circuit breaking current (Isc) up to 40 kA. The "C" indicates that the circuit breaker is an optional design with capacitor switching capabilities. T-VAC/T-VACC drawout circuit breakers have a normal current (I_n) up to 2000A. T-VACR/T-VACRC fixed circuit breakers have a normal current (I_n) up to 2500A. All were designed for use where space is at a premium.

Powering Business Worldwide

They are ideal for applications such as power houses, shipboard use, engine generators, restricted access locations and low-profile areas.

- 60% smaller and 50% lighter than comparable breakers
- One compact footprint through 17.5 kV
- Reduction of installed space
- Reduced material and shipping costs
- Lightweight components
- Installation/startup time savings
- 50 ms interrupting time
- Mechanical endurance up to 20,000 operations

T-VAC/T-VACC drawout and T-VACR/T-VACRC fixed circuit breakers

T-VAC/T-VACC and T-VACR/T-VACRC incorporate many proven design features coupled with over 70 years of power circuit breaker design and manufacturing experience.

T-VAC/T-VACC

- Three-position drawout (Disconnect, Test, Connect)
- Environmentally compatible vacuum switching
- Spring-loaded multi-finger primary disconnections
- Silver-plated fixed primary cassette stabs
- Automatic steel primary safety shutters (earthed)
- Cassette tested and certified to IEC 60298

T-VACR/T-VACRC

- Bolted bus or cable connections

T-VAC/T-VACC and T-VACR/T-VACRC

- Two-step stored energy mechanism
- O–0.3s–CO–15s–CO
- Certified to IEC 62271-100 for 50 and 60 Hz

Value-added flexibility

T-VAC/T-VACC and T-VACR/T-VACRC designs offer unmatched flexibility, even after installation. They simplify design, installation and use.

- Through-the-door or closed door operation
- Common family of accessories
- Field-installable accessories
- Labeled and dedicated secondaries
- Clear and concise operating panel
- Front access to mechanism/accessories
- Optional integral protective relay
- One compact 40 kA family drawout cassette size

Optional Digitrip™ protective relays

- rms sensing
- Microprocessor-based
- Self-powered
- Local testing
- Model 520V:
  - Basic protection (LSIG)
- Model 1150Vi:
  - Advanced protection (LSIG)
  - Metering and communications

T-VACR/T-VACRC fixed circuit breaker dimensions in inches (mm)

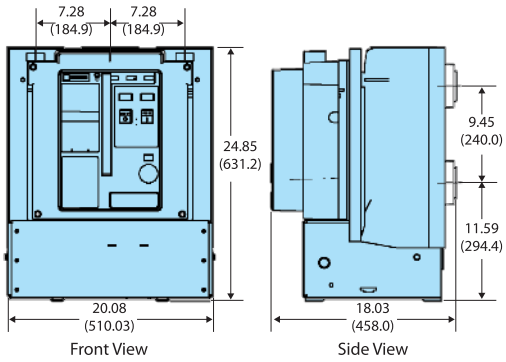

T-VAC/T-VACC drawout circuit breaker and cassette dimensions in inches (mm)

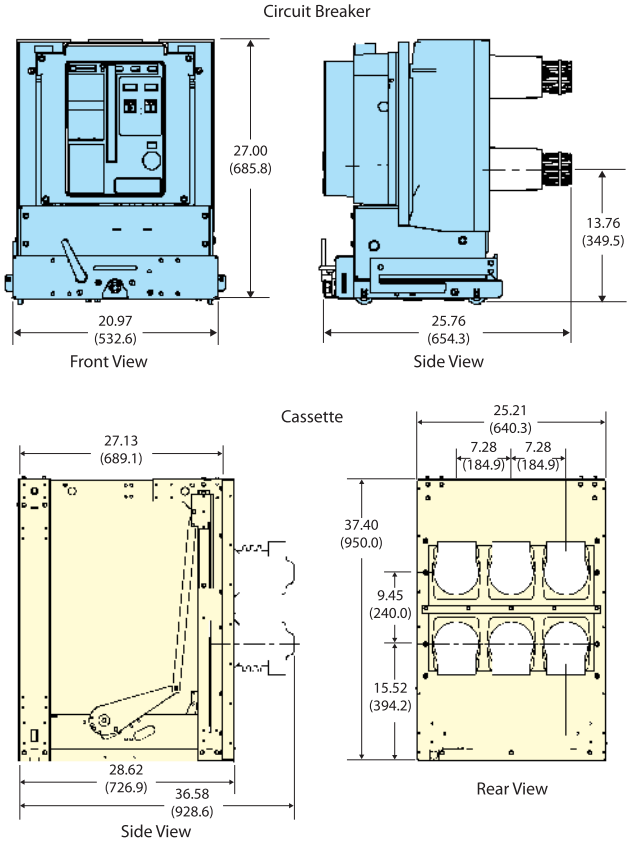

Certified for capacitor switching capabilities to "Class C2" in accordance with IEC 62271-100

Cable Charging	Ungrounded Banks	
	Single Bank	Back-to-Back
31.5A	250 and 1000A	250A with inrush current 18 kApk at 2.4 kHz and 1000A with inrush current 18 kApk at 24 kHz

Note: Ratings of 250 and 1000A cover capacitor bank applications from 75–1000A.

Selected T-VAC/T-VACR feature (n available)

Feature	Standard	Optional
Solidly earthed steel safety barrier (1)	■	
Spring-loaded primary finger disconnect	■	
Silver-plated primary cassette stabs	■	
Manual charging (2)	■	
Integral charging handle	■	
Electrical motor charging (3)		■
Auxiliary switch (5a/5b) (4)	■	
Mechanical operations counter	■	
24, 48, 125 and 250 Vdc, 120 and 240 Vac control	■	
Shunt trip	■	
Shunt trip (2nd) (5)		■
Spring release (5)		■
Undervoltage release (5)		■
ON and OFF pushbuttons	■	
"C" Type capacitor switching breakers		■

(1) 3 mm earthed steel barrier between mechanism and primary conduction.

(2) Includes shunt trip.

(3) Includes shunt trip and spring release, field-installable.

(4) Heavy-duty, double-break, wipe type for customer use.

(5) Field-installable, viewed through viewing window, maximum three devices (any combination).

50 and 60 Hz T-VAC/T-VACR breaker ratings certified to IEC 62271-100

Identification Rated Values								
		Insulation Level Withstand Voltage						
Circuit Breaker Type (1)	Voltage	Power Frequency	Lightning Impulse (U_w)	Normal Current (I_n)	Short-Circuit Breaking Current (2) (I_{sc})	Short-Circuit Making Current	Mechanical Endurance C–O	Approx. Weight Fix/ Drawout
	kV rms	kV rms	kV Peak	Amperes	kA rms	kA Peak	Operations	(kg)
72 T-VAC25 and 72 T-VACR25	7.2	20	60	2000 2500 (3)	25	63	10,000 ▼	157/199 159/NA
120 T-VAC25 and 120 T-VACR25	12 (4)	28	75	2000 2500 (3)	25	63	10,000 ▼	157/199 159/NA
175 T-VAC25 and 175 T-VACR25	17.5	38	95	2000 2500 (3)	25	63	10,000 ▼	161/203 163/NA
72 T-VAC32 and 72 T-VACR32	7.2	20	60	630 1250 2000 2500 (3)	31.5	82	10,000 ▼	153/195 153/195 157/199 159/NA
120 T-VAC32 and 120 T-VACR32	12 (4)	28	75	630 1250 2000 2500 (3)	31.5	82	10,000 ▼	153/195 153/195 157/199 159/NA
175 T-VAC32 and 175 T-VACR32	17.5	38	95	630 1250 2000 2500 (3)	31.5	82	10,000 ▼	155/197 155/197 159/201 161/NA
72 T-VAC40 and 72 T-VACR40	7.2	20	60	630 1250 2000 2500 (3)	40	104	10,000 ▼	155/197 155/197 159/201 161/NA
120 T-VAC40 and 120 T-VACR40	12 (4)	28	75	630 1250 2000 2500 (3)	40	104	10,000 ▼	155/197 155/197 159/201 161/NA
175 T-VAC40 and 175 T-VACR40	17.5	38	95	630 1250 2000 2500 (3)	40	104	10,000 ▼	157/199 157/199 161/203 163/NA

(1) Independent shunt trips are available for use with traditional protective relaying schemes.

(2) Also 3-second short-time current rating.

(3) 2500A available as fixed T-VACR circuit breaker only.

(4) Use 17.5 kV breaker and cassette when 95 kV impulse withstand required.

Eaton Corporation
Electrical Sector
1111 Superior Ave.
Cleveland, OH 44114
United States
877-ETN-CARE (877-386-2273)
Eaton.com

© 2010 Eaton Corporation
All Rights Reserved

Printed in USA
Publication No. PA01301006E / Z10701
December 2010

Powering Business Worldwide

PowerChain Management®

PowerChain Management is a registered trademark of Eaton Corporation.

All other trademarks are property of their respective owners.