Medium Voltage Generator
Vacuum Circuit Breakers

Improve Uptime, Reliability and Safety with Eaton's Power Generation Protection

Powering Business Worldwide

Medium voltage protection up to 180 megawatt generation

1. 29-Inch Frame
Front View, Drawout

2. 31-Inch Frame
Front View, Drawout

3. 29-Inch Frame
Rear View, Drawout

4. 31-Inch Frame
Rear View, Drawout

Generator circuits have unique characteristics that require specially designed and tested circuit breakers. The IEEE® developed the special industry standard C37.013 and amendment C37.013a-2007, to address these characteristics. Eaton Corporation has dedicated years of research, design, enhancement and testing to create Eaton's family of generator breakers. The VCP-WG (drawout) and VCP-WRG (fixed) circuit breakers meet, and even exceed, the rigorous service duty requirements for generator circuit applications as defined by IEEE.

Eaton's VCP-WG and VCP-WRG generator breakers are available in two frame sizes. The 29-inch frame (29 inches wide with front cover on) has ratings up to 15 kV, 63 kA and 3000A (4000A with forced air cooling). The 31-inch frame (31 inches wide with front cover on) has ratings up to 15 kV, 75 kA and 4000A (5000A with forced air cooling). The 31-inch frame is also available in a fixed version with ratings up to 15 kV, 75 kA and 6000A (7000A with forced air cooling).

Count on Eaton's innovative technology to handle high continuous AC current and voltage, then safely switch through extreme out-of-phase voltages and high-stress asymmetrical currents using "clean and green" vacuum interruption without fail for over 10,000 normal operations.

1

2

3

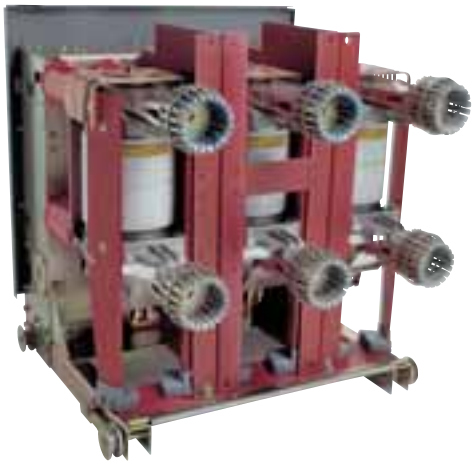

4

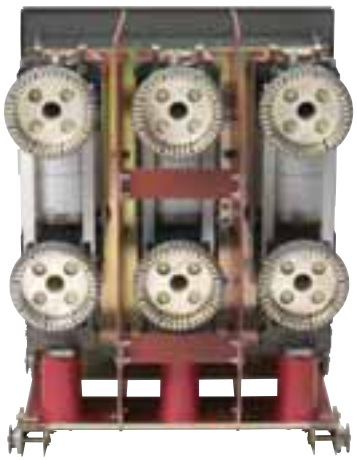

Handle high continuous current quietly and compactly

5. Generator Circuit Configuration

Generator circuits have a unique configuration. Transformer-fed faults **(a)** and Generator-fed faults **(b)** are two of the unique fault current conditions the VCP-WG and VCP-WRG are designed to handle.

6. Delayed Current Curve

Generator-fed faults can experience Delayed Current Zero, where the high inductance to resistance ratio of the system can cause the DC component of the fault current to exceed 100%.

Eaton's VCP-WG generator circuit breakers meet the strict service duty requirements set forth by IEEE for generator circuit applications, including:

- Generator circuit configuration
- High continuous current levels
- Unique fault current conditions
  - Transformer-fed faults
  - Generator-fed faults
- Unique voltage conditions
  - Very fast RRRV
  - Out-of-phase switching

Generator Circuit Configuration

The transformer and generator can be in close proximity to the circuit breaker (see Figure 5). Applications with high continuous current levels require connections with large conductors of very low impedance. This construction causes unique fault current and voltage conditions (see Figure 6).

High Continuous Current Levels

Generator circuit breakers must be able to handle high continuous current levels without overheating.

VCP-WG drawout circuit breakers are designed to reliably operate up to 4000A with natural air convection cooling, and up to 5000A with suitable enclosure fan cooling during overload conditions.

VCP-WRG fixed circuit breakers are designed to reliably operate up to 6000A with natural air convection cooling and up to 7000A with suitable enclosure fan cooling during overload conditions.

Unique Fault Current Conditions

System-source (aka, Transformer-fed) faults (see Figure 5, fault location "a") can be extremely high. The full energy of the power system feeds the fault and the low impedance of the fault current path does very little to limit the fault current. Eaton's type VCP-WG Generator Circuit Breakers are ideal for interrupting such high fault currents because they have demonstrated high interruption ratings up to 75 kA, with high DC fault content up to 75%, as proven by high power laboratory tests.

Generator-source (aka, Generator-fed) faults (see Figure 5, fault location "b") can cause a severe condition called "Delayed Current Zero" (see Figure 6). The high ratio of inductive reactance to resistance (X/R ratio) of the system can cause the DC component of the fault current to exceed 100%. The asymmetrical fault current peak becomes high enough and its decay becomes slow enough that the natural current zero is delayed for several cycles. The circuit breaker experiences longer arcing time and more electrical, thermal and mechanical stress during the interruption. The IEEE standard requires verification that the circuit breaker can interrupt under these severe conditions. Eaton's VCP-WG Generator Circuit Breakers have demonstrated their ability to interrupt three-phase fault current levels up to 135% DC content under delayed current zero conditions.

Unique Voltage Conditions

Generator circuits typically produce very fast rates of rise of recovery voltage (RRRV) due to the high natural frequency and low impedance and very low stray capacitance. VCP-WG Generator Circuit Breakers are designed to interrupt fault current levels with very fast RRRV in accordance with IEEE standard C37.013 and C37.013a.

VCP-WG Generator Circuit Breakers have a distinct ability to perform under out-of-phase conditions when the generator and power system voltages are not in sync. The voltages across the open contacts can be as high as twice the rated line-to-ground voltage of the system. The IEEE standard requires demonstration by test that the generator circuit breaker can switch under specified out-of-phase conditions.

5

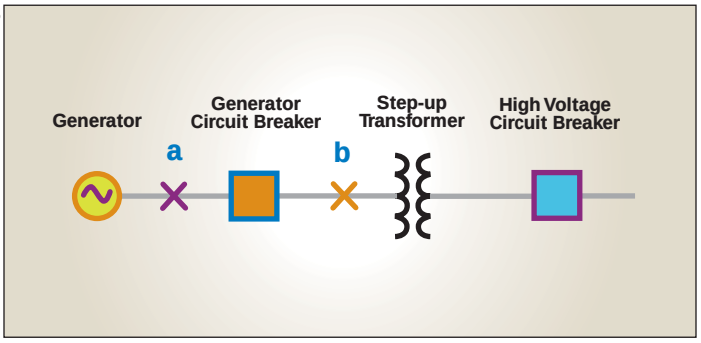

6

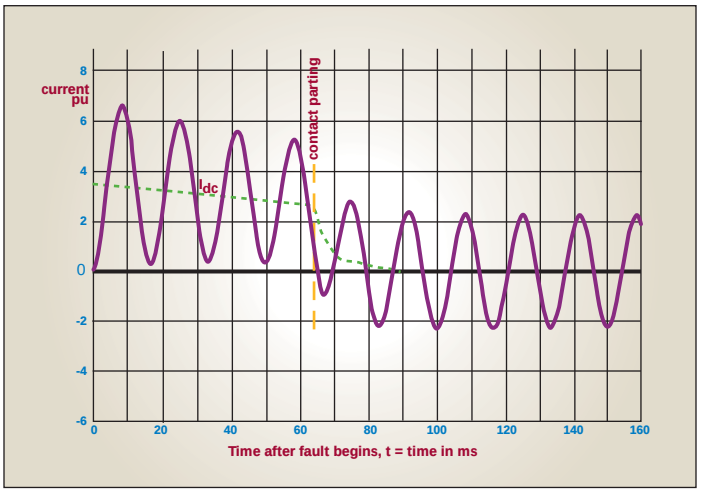

Draw it out or fix it in for maximum end user or OEM application versatility

5 kV Class

GENERATOR CIRCUIT BREAKER TYPES: VCP-WG (DRAWOUT – DO) / VCP-WRG (FIXED – FIX)

Maximum Voltage (V): 5 kV											
Short Circuit Current (Isc)		**50 kA**				**63 kA**				**75 kA**	
Frame (see Figures 7 and 8)		**29"**	**29"**	**31"**	**31"**	**29"**	**29"**	**31"**	**31"**	**31"**	**31"**
Ratings Assigned	**Units**	**DO**	**FIX**	**DO**	**FIX**	**DO**	**FIX**	**DO**	**FIX**	**DO**	**FIX**
Continuous Current	A rms	1200	1200	—	—	1200	1200	—	—	1200	1200
		2000	2000	—	—	2000	2000	—	—	2000	2000
		3000	3000	—	—	3000	3000	—	—	3000	3000
		4000 (1)	4000 (1)	4000	4000	4000 (1)	4000 (1)	4000	4000	4000	4000
		—	—	5000 (1)	5000	—	—	5000 (1)	5000	5000 (1)	5000
		—	—	—	6000	—	—	—	6000	—	6000
		—	—	—	6300 (1)	—	—	—	6300 (1)	—	6300 (1)
					7000 (1)				7000 (1)		7000 (1)
Dielectric Strength											
Power frequency withstand voltage	kV rms	19	19	19	19	19	19	19	19	19	19
Lightning impulse withstand voltage	kV peak	60	60	60	60	60	60	60	60	60	60
Interrupting Time	ms	50	50	83	83	50	50	83	83	83	83
Closing Time	ms	47	47	47	47	47	47	47	47	47	47
Short-Circuit Current	kA rms	50	50	50	50	63	63	63	63	75	75
Asymmetrical current interrupting capability	% DC	75	75	75	75	75	75	75	75	63	63
Ref: Minimum opening time	ms	30	30	54	54	30	30	54	54	54	54
Short-time current carrying capability	kA rms	50	50	50	50	63	63	63	63	75	75
Duration of short-time current	s	3	3	2.3	2.3	3	3	1.4	1.4	1	1
Closing and Latching Capability	kA peak	137	137	137	137	173	173	173	173	206	206
First Generator-Source Symmetrical Current Interrupting Capability	kA rms	25	25	25	25	31.5	31.5	31.5	31.5	40	40
First Generator-Source Asymmetrical Current Interrupting Capability	% DC	130	130	130	130	130	130	130	130	130	130
Second Generator-Source Symmetrical Current Interrupting Capability	kA rms	—	—	31.5	31.5	40	40	40	40	50	50
Second Generator-Source Asymmetrical Current Interrupting Capability	% DC	—	—	110	110	110	110	110	110	110	110
Prospective TRV — Rate of Rise of Recovery Voltage (RRRV)	kV / µs	3.0	3.0	3.0	3.0	3.0	3.0	3.0	3.0	3.0 (2)	3.0 (2)
Transient recovery voltage — Peak (E2 = 1.84 x V)	kV peak	9.2	9.2	9.2	9.2	9.2	9.2	9.2	9.2	9.2 (2)	9.2 (2)
Transient recovery voltage — Time to Peak (T2 = 0.62 x V)	µs	3.1	3.1	3.1	3.1	3.1	3.1	3.1	3.1	3.1 (2)	3.1 (2)
Load Current Switching Endurance Capability	operations	10,000	10,000	10,000	10,000	10,000	10,000	10,000	10,000	10,000	10,000
No-Load Mechanical Endurance Capability	operations	10,000	10,000	10,000	10,000	10,000	10,000	10,000	10,000	10,000	10,000
Out-of-Phase Current Switching Capability	kA	25	25	25	25	31.5	31.5	31.5	31.5	37.5	37.5
90 º out-of-phase power frequency recovery voltage (= 1.5 x sqrt(2/3) x V)	kV rms	6.1	6.1	6.1	6.1	6.1	6.1	6.1	6.1	6.1	6.1
90 º out-of-phase inherent TRV – Rate of Rise of Recovery Voltage (RRRV)	kV / µs	3.3	3.3	3.3	3.3	3.3	3.3	3.3	3.3	3.3	3.3
Transient recovery voltage — Peak (E2 = 2.6 x V)	kV peak	13	13	13	13	13	13	13	13	13	13
Transient recovery voltage — Time to Peak (T2 = 0.89 x V)	µs	4.5	4.5	4.5	4.5	4.5	4.5	4.5	4.5	4.5	4.5
Enclosure = VCP-W	—	5 kV, 3 kA		5 kV, 4 kA		5 kV, 3 kA		5 kV, 4 kA		5 kV, 4 kA	

Notes:

- Rated frequency: 60 Hz
- Standard operating duty: CO - 30 m - CO
- Relevant Standard: IEEE standards C37.013-1997 and C37.013a-2007
- Test certificates available

(1) Ratings achieved using forced air cooling by blowers in the enclosure.
(2) TRV capacitors are required if RRRV>0.5 kV/µs; or T2<65 µs.

Power through extreme out-of-phase voltages reliably

15 kV Class

GENERATOR CIRCUIT BREAKER TYPES: VCP-WG (DRAWOUT – DO) / VCP-WRG (FIXED – FIX) (CONTINUED)

Maximum Voltage (V): 15 kV											
Short Circuit Current (Isc)		**50 kA**				**63 kA**				**75 kA**	
Frame (see Figures 7 and 8)		**29"**	**29"**	**31"**	**31"**	**29"**	**29"**	**31"**	**31"**	**31"**	**31"**
Ratings Assigned	**Units**	**DO**	**FIX**	**DO**	**FIX**	**DO**	**FIX**	**DO**	**FIX**	**DO**	**FIX**
Continuous Current	A rms	1200	1200	—	—	1200	1200	—	—	1200	1200
		2000	2000	—	—	2000	2000	—	—	2000	2000
		3000	3000	—	—	3000	3000	—	—	3000	3000
		4000 (1)	4000 (1)	4000	4000	4000 (1)	4000 (1)	4000	4000	4000	4000
		—	—	5000 (1)	5000	—	—	5000 (1)	5000	5000 (1)	5000
		—	—	—	6000	—	—	—	6000	—	6000
		—	—	—	6300 (1)	—	—	—	6300 (1)	—	6300 (1)
					7000 (1)				7000 (1)		7000 (1)
Dielectric Strength											
Power frequency withstand voltage	kV rms	36	36	36	36	36	36	36	36	36	36
Lightning impulse withstand voltage	kV peak	95	95	95	95	95	95	95	95	95	95
Interrupting Time	ms	50	50	83	83	50	50	83	83	83	83
Closing Time	ms	47	47	47	47	47	47	47	47	47	47
Short-Circuit Current	kA rms	50	50	50	50	63	63	63	63	75	75
Asymmetrical current interrupting capability	% DC	75	75	75	75	75	75	75	75	63	63
Ref: Minimum opening time	ms	30	30	54	54	30	30	54	54	54	54
Short-time current carrying capability	kA rms	50	50	50	50	63	63	63	63	75	75
Duration of short-time current	s	3	3	2.3	2.3	3	3	1.4	1.4	1	1
Closing and Latching Capability	kA peak	137	137	137	137	173	173	173	173	206	206
First Generator-Source Symmetrical Current Interrupting Capability	kA rms	25	25	25	25	31.5	31.5	31.5	31.5	40	40
First Generator-Source Asymmetrical Current Interrupting Capability	% DC	130	130	130	130	130	130	130	130	130	130
Second Generator-Source Symmetrical Current Interrupting Capability	kA rms	—	—	31.5	31.5	40	40	40	40	50	50
Second Generator-Source Asymmetrical Current Interrupting Capability	% DC	—	—	110	110	110	110	110	110	110	110
Prospective TRV — Rate of Rise of Recovery Voltage (RRRV)	kV / µs	3.4	3.4	3.4	3.4	3.4	3.4	3.4	3.4	3.4 (2)	3.4 (2)
Transient recovery voltage — Peak (E2 = 1.84 x V)	kV peak	27.6	27.6	27.6	27.6	27.6	27.6	27.6	27.6	30.9 (2)	30.9 (2)
Transient recovery voltage — Time to Peak (T2 = 0.62 x V)	µs	9.3	9.3	9.3	9.3	9.3	9.3	9.3	9.3	9.3 (2)	9.3 (2)
Load Current Switching Endurance Capability	operations	10,000	10,000	10,000	10,000	10,000	10,000	10,000	10,000	10,000	10,000
No-Load Mechanical Endurance Capability	operations	10,000	10,000	10,000	10,000	10,000	10,000	10,000	10,000	10,000	10,000
Out-of-Phase Current Switching Capability	kA	25	25	25	25	31.5	31.5	31.5	31.5	37.5	37.5
90 º out-of-phase power frequency recovery voltage (= 1.5 x sqrt(2/3) x V)	kV rms	18.4	18.4	18.4	18.4	18.4	18.4	18.4	18.4	18.4	18.4
90 º out-of-phase inherent TRV — Rate of Rise of Recovery Voltage (RRRV)	kV / µs	3.3	3.3	3.3	3.3	3.3	3.3	3.3	3.3	3.3	3.3
Transient recovery voltage — Peak (E2 = 2.6 x V)	kV peak	39	39	39	39	39	39	39	39	39	39
Transient recovery voltage — Time to Peak (T2 = 0.89 x V)	µs	13.4	13.4	13.4	13.4	13.4	13.4	13.4	13.4	13.4	13.4
Enclosure = VCP-W	—	15 kV, 3 kA		15 kV, 4 kA		15 kV, 3 kA		15 kV, 4 kA		15 kV, 4 kA	

Notes:

- Rated frequency: 60 Hz
- Standard operating duty: CO - 30 m - CO
- Relevant Standard: IEEE standards C37.013-1997 and C37.013a-2007
- Test certificates available

(1) Ratings achieved using forced air cooling by blowers in the enclosure.
(2) TRV capacitors are required if RRRV>0.5 kV/µs; or T2<65 µs.

Safely switch high-stress DC fault current content robustly

7. Dimensions for 29-Inch Frame

Approximate weight is 550 lbs. (250 kg).

8. Dimensions for 31-Inch Frame

Approximate weight is 950 lbs. (431 kg).

9. Type VCP-WG Operating Mechanism
Easy access to the mechanism with front cover removed.

9

Versatility in Application

Eaton's Generator Vacuum Circuit Breakers are available in drawout (VCP-WG) or fixed (VCP-WRG) configurations to provide for superior performance and versatility. Many industrial and commercial power systems now include small generators as a local source of power. New applications are arising as a result of the de-regulation of the utility industry, and the construction of smaller packaged power plants. Eaton's generator breakers interrupt large short-circuit currents in a small three-pole package.

Typical applications include:

- Electric utilities: fossil, hydro and wind power
- Packaged power plants
- Industrial companies using combined cycle/combustion turbine plants
- Government and military
- Commercial institutions
- Petro-chemical and process industries
- Forestry, pulp and paper
- Mining, exploration and marine

The VCP-WG is the world's generator circuit breaker for reliable and robust power generation protection.

7

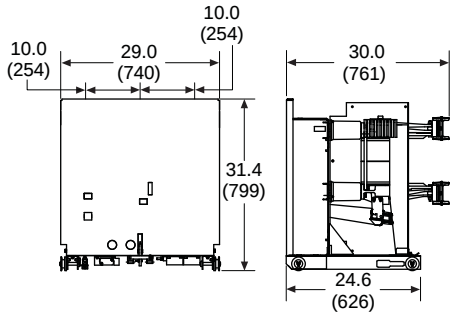

29-Inch Frame Drawout VCP-WG

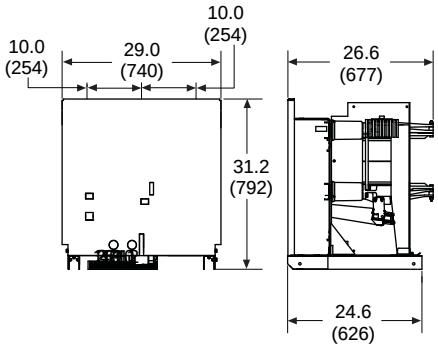

29-Inch Frame Fixed VCP-WRG

8

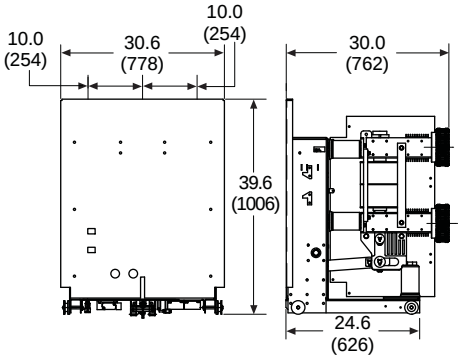

31-Inch Frame Drawout VCP-WG

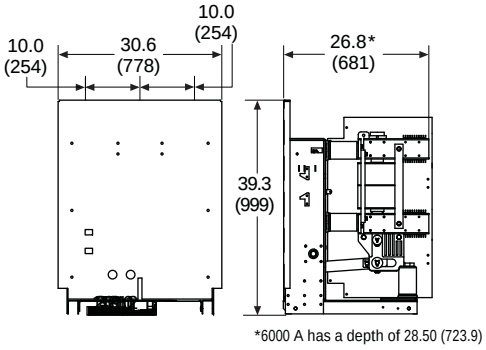

*6000 A has a depth of 28.50 (723.9)

31-Inch Frame Fixed VCP-WRG

Eaton Corporation is a diversified power management company ranked among the largest Fortune 500 companies. The electrical group is Eaton's largest division and is a global leader in electrical control, power distribution, power quality, automation, and monitoring products and services.
Eaton's global electrical brands, including Cutler-Hammer®, MGE Office Protection Systems™, Powerware®, Holec®, MEM®, Santak and Moeller, provide customer-driven PowerChain Management® solutions to serve the power system needs of the industrial, institutional, government, utility, commercial, residential, IT, mission critical and OEM markets worldwide.

PowerChain Management solutions help enterprises achieve sustainable and competitive advantages through proactive management of the power system as a strategic, integrated asset throughout its life cycle. With Eaton's distribution, generation and power quality equipment; full-scale engineering services; and information management systems, the power system is positioned to deliver powerful results: greater reliability, operating cost efficiencies, effective use of capital, enhanced safety and risk mitigation.

Eaton Corporation
Electrical Group
1000 Cherrington Parkway
Moon Township, PA 15108
United States
877-ETN-CARE (877-386-2273)
Eaton.com

PowerChain Management®

Powering Business Worldwide

© 2008 Eaton Corporation
All Rights Reserved
Printed in USA
Publication No. BR01301001E / Z7264
November 2008

PowerChain Management is a registered trademark of Eaton Corporation.

All other trademarks are property of their respective owners.