Enclosed generator circuit breaker assembly for outdoor application

IEEE C37.013 Generator Breaker

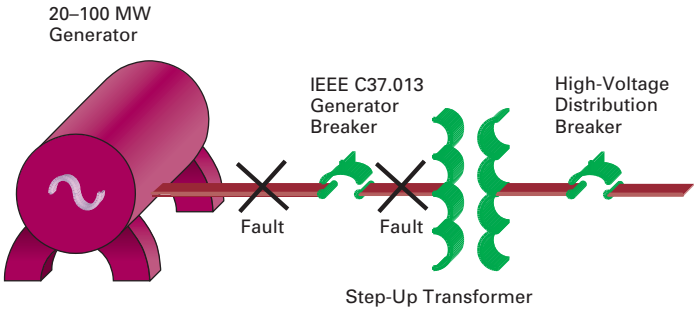

Eaton's enclosed generator breaker is the top choice for generator protection between 20 and 100 MW.

Generator circuit breakers are a special application, because they experience conditions that are not common and are certainly far more demanding than those experienced in normal power distribution circuits. Generator circuit breakers are commonly connected in close proximity to large inductive generators and step-up transformers by large conductors with low impedance. This maximizes the system operating efficiency and reduces the watt loss of the system, but this leads to special conditions when the breaker is called upon to switch or interrupt transformer-source and generator-fed faults.

Eaton's VCP-WG generator circuit breakers include design enhancements and special testing to IEEE® C37.013 to confirm their performance. These unique conditions, in addition to high continuous current and interruption ratings, include high X/R ratios, high AC asymmetry, delayed current zero, fast-transient recovery voltage (TRV) with rapid rate of rise recovery voltage (RRRV), and out-of-phase current switching. The failure of a circuit breaker to properly perform under these conditions could result in extensive costs and downtime for repair.

Offering a small footprint, high current ratings, and roof bushing configurations optimized for direct replacement of aging Westinghouse® and GE® oil circuit breakers, Eaton's generator breaker assembly is the perfect alternative to expensive rebuilds. This assembly is specifically designed for applications where the breaker is located between the generator and the step-up transformer. Eaton's enclosed generator breaker provides clean, green protection, eliminating the use of potentially environmentally harmful substances like SF_6 gas and oil. The patent-pending cooling system provides up to 5000A continuous current ratings without the use of fans.

The enclosed generator breaker comes standard with a stainless steel roof, welded enclosure, removable lifting features, and dual-access doors. In addition, there is an extensive list of optional features that are available for customizing a protection package to meet your individual needs.

Ratings

- 4600A continuous current rating with filters
- 5000A continuous current rating without filters
- 5300A continuous current rating (fan cooled, with or without filters)
- 75 kA interrupting ratings
- 15 kV maximum voltage
- 95 kV BIL

Contact Eaton for availability of future ratings of 6000A (ambient air cooled) and up to 7000A (with fans).

Powering Business Worldwide

Standard features

- 11-gauge steel construction
- NEMA® 3 fully welded outdoor enclosure
- Stainless steel roof
- ANSI 61 gray paint
- 15 kV roof bushings
- VCP-WRG generator breaker
  - Fixed-mounted breaker
  - 5000A continuous current ratings without fans
  - 50–75 kAIC interrupting ratings
- Hinged dual front-access doors with drip shield
- Three-point latch with 90-degree stop and padlockable handle
- External grounding pads
- 120V space heaters provided for moisture control
- Removable lifting angles and grounding pads

Optional features

- Fan package to boost ratings to 5300A continuous current with or without filters
- Filter option
- Surge arrestors (roof mounted, station class type metal oxide varistor [MOV])
- Surge capacitors (interior mounted)
- Bushing CTs (up to two per phase C800, internally mounted)
- Externally accessible control compartment
  - Mounted on the left or right side for convenience
  - Containing terminal blocks for external customer wiring

Standards

- Outdoor enclosure tested to the wind-driven rain requirements of IEEE® C37.20.3
- IEEE C37.20.3—metal-enclosed switchgear
- IEEE C37.013—generator breakers

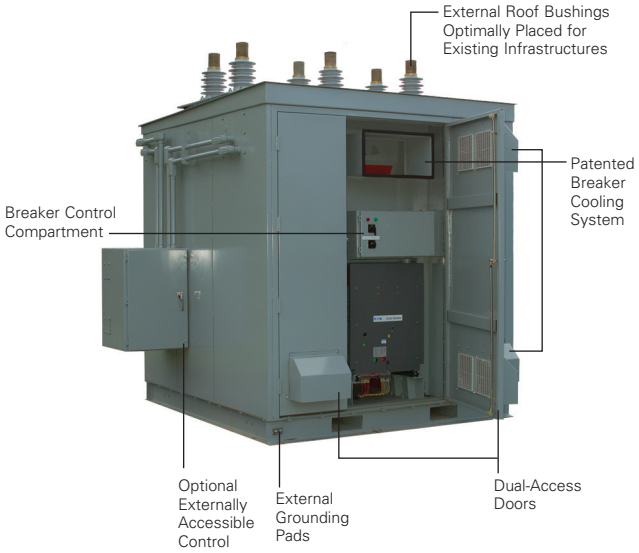

Why do you need a special generator breaker?

The unique characteristics of generator circuits require a specially designed and tested circuit breaker.

Unique generator circuit characteristics:

- High X/R ratios
- Increased DC fault content
- High AC asymmetry
- Delayed current zero

Unique breaker capabilities:

- IEEE C37.013 test pedigree
- High continuous current ratings
- High interruption ratings
- Fast TRV
- Out-of-phase switching

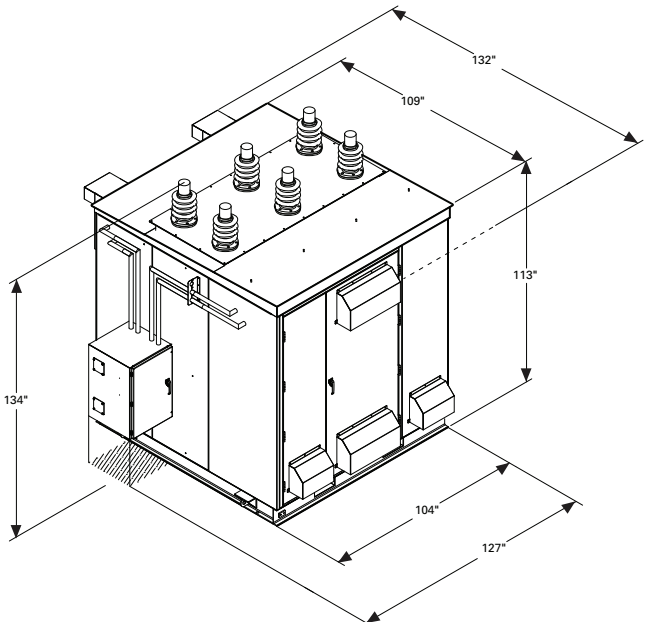

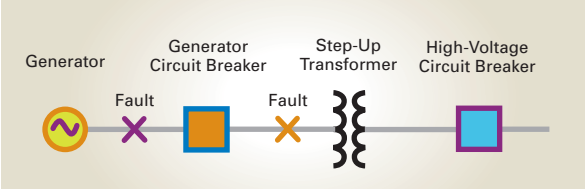

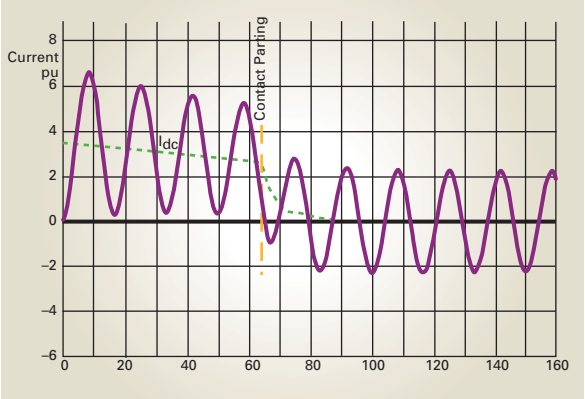

Eaton Corporation
Electrical Group
1000 Cherrington Parkway
Moon Township, PA 15108
United States
877-ETN-CARE (877-386-2273)
Eaton.com

© 2009 Eaton Corporation
All Rights Reserved
Printed in USA
Publication No. PA02200001E / Z8372
April 2009

Powering Business Worldwide

PowerChain Management®

PowerChain Management is a registered trademark of Eaton Corporation.

All other trademarks are property of their respective owners.