E51 Modular Limit Switch Style Photoelectric Sensors

Contents

Overview 1
Model Selection, Assembled Sensors 2
Model Selection, Sensor Heads 4
Model Selection, Sensor Bodies 6
Model Selection, Logic Modules 6
Model Selection, Receptacles 7
Model Selection, Compatible Connector Cables 7
Wiring Diagrams 8
Model Selection, Accessories 8
Specifications 10
Dimensions 10

Cutler-Hammer® E51 Limit Switch Style Modular Sensors from Eaton's electrical business are available in thru-beam, reflex, polarized reflex, diffuse reflective and fiber optic sensing modes to solve a wide variety of sensing applications. Modular, plug-in components are easy to maintain, meaning less downtime and reduced inventory. Choose between 2-wire sensors with AC/DC operation and 4-wire sensors in either AC or DC styles. Connection options include terminal, mini-connector and various lengths of cable. Sensors can be ordered in component form or as fully assembled units.

Approvals

- UL Listed
- CSA Certified

CE (where shown)

Unless otherwise noted, the products contained in this document are not designed or intended for use in human safety applications.

Modular Construction and a Variety of Operating Modes

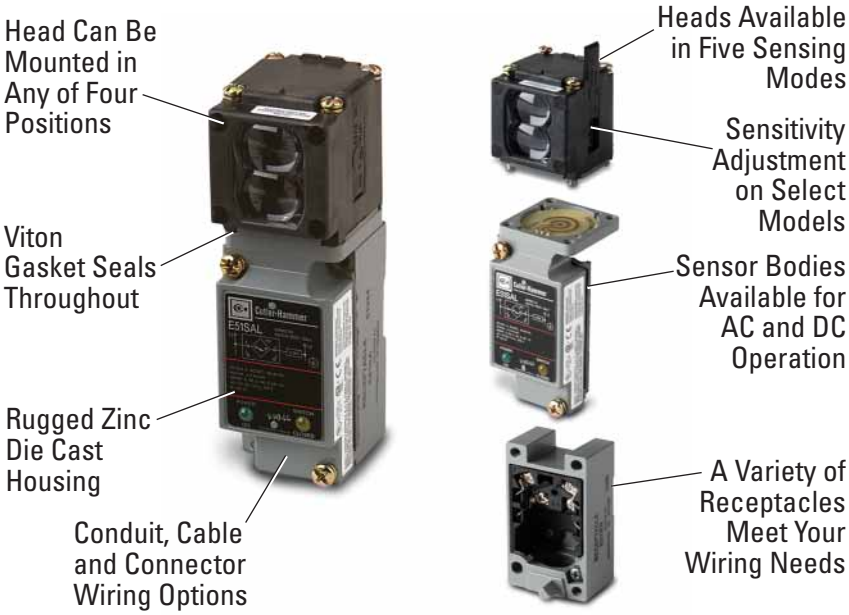

Product Features

- Choose from five different sensing modes including fiber optic
- All heads feature a selector switch for light or dark operation
- Logic modules are available to provide additional control functions
- Rugged construction, ideal for industrial environments
- Viton gaskets ensure a positive seal and high chemical resistance
- Sensor heads can be rotated to any of four positions
- Components are interchangeable with E51 proximity sensors
- Sensors accommodate both U.S. and DIN mounting dimensions
- Sensor bodies feature bifurcated engagement prongs for a reliable electrical connection when plugging into receptacle stabs

Model Selection — Assembled Sensors — Reflex, Diffuse Reflective and Thru-Beam

Assembled Sensor	Sensor Body and Receptacle		2-Wire Sensors	4-Wire Sensors			
		Operating Voltage	20 – 264V AC/DC	120V AC		10 – 30V DC	
		Output	N.O. or N.C. ①	N.O. and N.C. Complementary		N.O. and N.C. Complementary	
		Sensor Body	**E51SAL**	**E51SCL**	**E51SCN** Accepts Logic Modules ②	**E51SNL** NPN	**E51SPL** PNP
		Receptacle ④	**E51RA**	**E51RC**	**E51RCB**	**E51RN**	**E51RN**

Sensor Heads ①	Sensing Range	Response Time	Sensing Beam	Catalog Number Sensor Head Only	Catalog Number Assembled Sensors with Head, Sensor Body and Receptacle				
Reflex	18 feet (5.5m)	Standard Response	Infrared	**E51DP1**	**E51ALP1** CE	**E51CLP1**	**E51CNP1**	**E51NLP1** CE	**E51PLP1** CE
	35 feet (10.7m)	Standard Response		**E51DP3**	—	**E51CLP3**	**E51CNP3**	**E51NLP3** CE	**E51PLP3** CE
Polarized Reflex	15 feet (4.5m)	Standard Response	Visible Red	**E51DP5**	—	**E51CLP5**	**E51CNP5**	**E51NLP5** CE	**E51PLP5** CE
Diffuse Reflective	8 inches (200 mm)	Standard Response	Infrared	**E51DP2**	**E51ALP2** CE	**E51CLP2**	**E51CNP2**	**E51NLP2** CE	**E51PLP2** CE
		Fast Response		**E51DP22**	—	**E51CLP22**	**E51CNP22**	**E51NLP22** CE	**E51PLP22** CE
	18 inches (450 mm)	Standard Response		**E51DP6**	—	**E51CLP6**	**E51CNP6**	**E51NLP6** CE	**E51PLP6** CE
	40 inches (1m)	Standard Response		**E51DP4**	—	**E51CLP4**	**E51CNP4**	**E51NLP4** CE	**E51PLP4** CE
Thru-Beam Detector	300 feet (90m)	Standard Response	—	**E51DC1**	**E51ALC1** CE	**E51CLC1**	**E51CNC1**	**E51NLC1** CE	**E51PLC1** CE
Thru-Beam Source ④	300 feet (90m)	—	Infrared with visible red alignment aid	**E51DEL**	**E51ELA (120V AC Operation)**				
				E51DED	**E51EDN (10 – 30V DC Operation)**				

① All sensor heads feature a light or dark operation selector switch which reverses the output function.
② Logic modules must be ordered separately, see **Page 6**. These sensor bodies are rated NEMA 4, 4X and 13.
③ Includes sensor head mounted to sensor body. Head can be rotated to any of four discrete positions on body, 90% apart, but is not separate from body.
④ Receptacles feature terminal wiring with a 1/2" NPT thread at the conduit entrance. Other connection options are available (see below and **Page 7**).

Connection Option		Suffix	Example
20 mm thread at the conduit entrance		**20**	**E51ALP120**
Built-in Mini-Connector with epoxy filled receptacle	2-wire, 3-pin connector	**P3**	**E51ALP1P3**
	4-wire, 5-pin connector	**P5**	**E51CLP1P5**
Pigtail with Mini-Connector	2-wire, AC/DC	**T3**	**E51RAPT3**
	4-wire, AC	**T5**	**E51RCPT5**
	4-wire, DC	**T5**	**E51RNPT5**
Pre-wired cable with epoxy filled receptacle	8 feet long	**S**	**E51ALP1S**
	12 feet long	**S12**	**E51ALP1S12**
	20 feet long	**S20**	**E51ALP1S20**

Fast turn product with typical one business day lead-time to shipment.

See listing of compatible connector cables on **Page 7**.

Model Selection — Assembled Sensors — Glass Fiber Optic

Assembled Sensor	Sensor Body and Receptacle		2-Wire Sensors	4-Wire Sensors			
		Operating Voltage	20 – 264V AC/DC	120V AC		10 – 30V DC	
		Output	N.O. or N.C. ①	N.O. and N.C. Complementary		N.O. and N.C. Complementary	
		Sensor Body	**E51SAL**	**E51SCL**	**E51SCN** Accepts Logic Modules ②	**E51SNL** NPN	**E51SPL** PNP
		Receptacle ⑥	**E51RA**	**E51RC**	**E51RCB**	**E51RN**	**E51RN**

Sensor Heads ①	Sensing Range	Response Time	Catalog Number Sensor Head Only	Catalog Number Assembled Sensors with Head, Sensor Body and Receptacle				
Glass Fiber Optic, Standard Fiber Mounting Style ⑤	3 inches (75 mm) ③ 25 inches (650 mm) ④	Standard Response	**E51DF1**	—	**E51CLF1**	**E51CNF1**	**E51NLF1** CE	**E51PLF1** CE
	1 inch (25 mm) ③ 9 inches (225 mm) ④	Fast Response	**E51DF11**	—	**E51CLF11**	**E51CNF11**	**E51NLF11** CE	**E51PLF11** CE
Glass Fiber Optic, Collar Fiber Mounting Style ⑤	3 inches (75 mm) ③ 25 inches (650 mm) ④	Standard Response	**E51DF3**	—	**E51CLF3**	**E51CNF3**	**E51NLF3** CE	**E51PLF3** CE
	1 inch (25 mm) ③ 9 inches (225 mm) ④	Fast Response	**E51DF33**	—	**E51CLF33**	**E51CNF33**	**E51NLF33** CE	**E51PLF33** CE

① All sensor heads feature a light or dark operation selector switch which reverses the output function.
② Logic modules must be ordered separately, see **Page 6**. These sensor bodies are rated NEMA 4, 4X and 13.
③ Sensing range for diffuse reflective mode for 0.125 inch (3.2 mm) diameter fibers. See **Page 5** for complete sensing range specifications.
④ Sensing range in thru-beam mode for 0.125 inch (3.2 mm) diameter fibers. See **Page 5** for complete sensing range specifications.
⑤ Requires glass fiber optic cables for operation (not included), see **PG.05E.15.T.E**.
⑥ Receptacles feature terminal wiring with a 1/2" NPT thread at the conduit entrance. Other connection options are available (see below and **Page 7**).

Connection Option		Suffix	Example
20 mm thread at the conduit entrance		**20**	**E51CLF120**
Built-in Mini-Connector with epoxy filled receptacle	2-wire, 3-pin connector	**P3**	**E51CLF1P3**
	4-wire, 5-pin connector	**P5**	**E51CLF1P5**
Pigtail with Mini-Connector	2-wire, AC/DC	**T3**	**E51RAPT3**
	4-wire, AC	**T5**	**E51RCPT5**
	4-wire, DC	**T5**	**E51RNPT5**
Pre-wired cable with epoxy filled receptacle	8 feet long	**S**	**E51ALP1S**
	12 feet long	**S12**	**E51ALP1S12**
	20 feet long	**S20**	**E51ALP1S20**

Fast turn product with typical one business day lead-time to shipment.

See listing of compatible connector cables on **Page 7**.

Model Selection — Sensor Heads — Reflex, Diffuse Reflective and Thru-Beam ①

	Sensing Range ②	Field of View	Response Time ON AC Sensor	Response Time ON DC Sensor	Response Time OFF AC Sensor	Response Time OFF DC Sensor	Sensing Beam	Adjustments	Input Voltage	Catalog Number
Reflex	18 feet (5.5m)	6 inch (152 mm) diameter at 15 feet (4.6m)	20 mS	20 mS	30 mS	22 mS	Infrared	—	—	**E51DP1**
	35 feet (10.7m)	12 inch (305 mm) diameter at 35 feet (10.7m)	20 mS	20 mS	30 mS	22 mS	Infrared	—	—	**E51DP3**
Polarized Reflex	15 feet (4.5m)	6 inch (152 mm) diameter at 15 feet (4.6m)	20 mS	20 mS	30 mS	22 mS	Visible Red	—	—	**E51DP5**
Diffuse Reflective	8 inches (200 mm)	1 inch (25 mm) diameter at 4 inches (101m)	20 mS	20 mS	30 mS	22 mS	Infrared	Near/Far ③	—	**E51DP2**
			1 mS	0.5 mS	9 mS	0.5 mS	Infrared	Near/Far ③	—	**E51DP22**
	18 inches (450 mm)	1 inch (25 mm) diameter at 9 inches (228m)	20 mS	20 mS	30 mS	22 mS	Infrared	Near/Far ③	—	**E51DP6**
	40 inches (1m)	1.5 inch (38 mm) diameter at 40 inches (1m)	20 mS	20 mS	30 mS	22 mS	Infrared	—	—	**E51DP4**
Thru-Beam Detector	300 feet (90m)	18 inch (457 mm) diameter at 20 feet (6.1m)	10 mS	5 mS	10 mS	5 mS	—	Sensitivity	—	**E51DC1**
Thru-Beam Source ④	300 feet (90m)	36 inch (914 mm) diameter at 20 feet (6.1m)	—	—	—	—	Infrared with visible red alignment aid	—	120V AC	**E51DEL**
									10 – 30V DC	**E51DED**

① All sensor heads feature a light or dark operation selector switch.
② Reflex ranges are based on a 3-inch retroreflector; diffuse reflective ranges are based on a 90% reflectance white card.
③ These sensor heads have a mechanical Near/Far adjustment which adjust the head for optimum performance at the expected target distance. The adjustment, which move the optics and adjustment indicator, is made before the head is mounted on the sensor body. Excess gain graphs are shown in the "Far" setting.
④ Includes sensor head mounted to sensor body. Use receptacles E51RA for AC or E51RN for DC sources. Head can be rotated to any of four discrete positions on body, 90° apart, but is not separate from the body.

Fast turn product with typical one business day lead-time to shipment.

Excess Gain

Reflex
(3-inch diameter retroreflector)

1. E51DP3
2. E51DP1
3. E51DP5

Diffuse Reflective
(90% reflective white card)

4. E51DP6
5. E51DP4
6. E51DP2 and E51DP22

Thru-Beam

7. E51DEL and E51DED Sources Using E51DC1 Detector

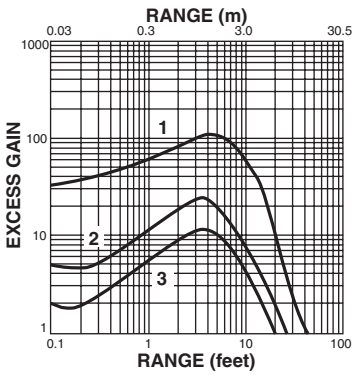

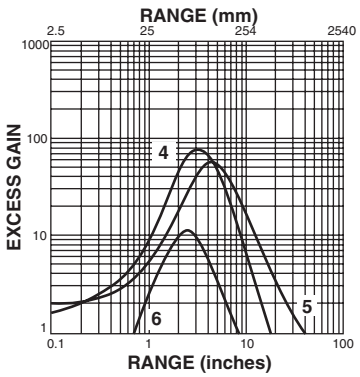

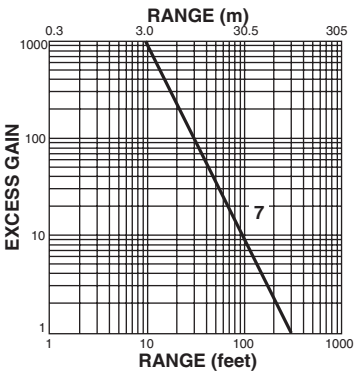

Model Selection — Sensor Heads — Glass Fiber Optic①

	Sensing Range ②				Response Time				Sensing Beam	Adjustments	Catalog Number
	Thru-Beam Mode		Diffuse Reflective Mode		ON		OFF				
	0.063 Inch Diameter Fibers	0.125 Inch Diameter Fibers	0.063 Inch Diameter Fibers	0.125 Inch Diameter Fibers	AC Sensor	DC Sensor	AC Sensor	DC Sensor			
Standard Fiber Mounting Style ③	8 inches (200 mm)	25 inches (650 mm)	0.6 inch (15 mm)	3 inches (75 mm)	20 mS	20 mS	30 mS	22 mS	Infrared	—	**E51DF1**
	3 inches (75 mm)	9 inches (225 mm)	0.25 inch (6 mm)	1 inch (25 mm)	0.5 mS	0.5 mS	9 mS	0.5 mS	Infrared	—	**E51DF11**
Collar Fiber Mounting Style ③	8 inches (200 mm)	25 inches (650 mm)	0.6 inch (15 mm)	3 inches (75 mm)	20 mS	20 mS	30 mS	22 mS	Infrared	Sensitivity	**E51DF3**
	3 inches (75 mm)	9 inches (225 mm)	0.25 inch (6 mm)	1 inch (25 mm)	0.5 mS	0.5 mS	9 mS	0.5 mS	Infrared	Sensitivity	**E51DF33**
	10 inches (250 mm)	40 inches (1000 mm)	0.8 inch (20 mm)	4.5 inches (115 mm)	20 mS	20 mS	30 mS	22 mS	Infrared	—	**E51DF4**

① All sensor heads feature a light or dark operation selector switch.
② Diffuse reflective ranges are based on a 90% reflectance white card.
③ Requires glass fiber optic cables for operation (not included), see **PG.05E.15.T.E**.

Fast turn product with typical one business day lead-time to shipment.

Excess Gain

Diffuse Reflective
(90% reflective white card)

E51DF1 and E51DF3 high power sensor head with:

1. 0.125" fiber bundle
2. 0.094" fiber bundle
4. 0.063" fiber bundle

E51DF33 fast response sensor head with:

3. 0.125" fiber bundle
4. 0.094" fiber bundle
5. 0.063" fiber bundle

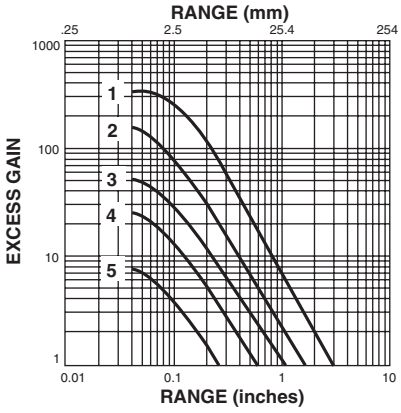

Thru-Beam

E51DF4 extended range sensor head with:

1. 0.125" fiber bundle
4. 0.063" fiber bundle

E51DF1 and E51DF3 high power sensor head with:

2. 0.125" fiber bundle
3. 0.094" fiber bundle
6. 0.063" fiber bundle

E51DF33 fast response sensor head with:

5. 0.125" fiber bundle
7. 0.094" fiber bundle
8. 0.063" fiber bundle

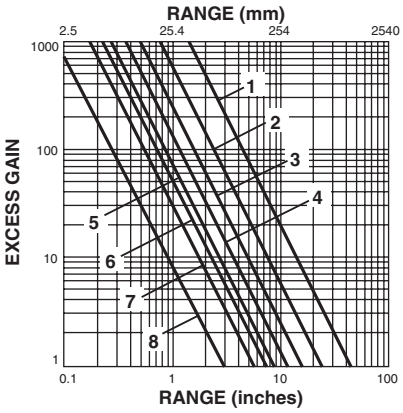

Model Selection — Sensor Bodies

	Operating Voltage	Output	Protection	Output Rating Continuous	Type	Catalog Number
2-Wire Sensors						
AC/DC	20 – 264V AC/DC, 50/60 Hz	1 output, load powered, N.O. or N.C., programmable from head; OFF state leakage current: 1.7 mA at 120V AC/DC, <2.0 mA at 240V AC	Latching short circuit and overload	0.5A	—	**E51SAL** ① CE
4-Wire Sensors						
AC E51SCN Shown	120V AC, 50/60 Hz	2 complementary outputs, line powered, N.O. and N.C.	—	1.0A to 158° (70°), linearly derated to 0.6A at 176° (80°)	—	**E51SCL** ①
				1.0A to 113° (45°), linearly derated to 0.3A at 176° (80°)	Accepts Logic Modules (See chart below)	**E51SCN** ②
DC	10 – 30V DC	2 complementary outputs, line powered, N.O. and N.C. Burden Current: <25 mA OFF state leakage: <100 µA ON state: <2.5V DC Power-Up Delay: <150 mS	Reverse polarity	0.6A to 104° (40°), linearly derated to 0.36A at 176° (80°)	NPN	**E51SNL** ① CE
					PNP	**E51SPL** ① CE

① This sensor body is available in a factory-sealed, non plug-in configuration (with 8-foot cable), add **6P** to listed Catalog Number. Example: E51SAL**6P**.

② Sensor body is black. E51SCN sensor bodies are rated NEMA 4, 4X and 13.

Fast turn product with typical one business day lead-time to shipment.

Model Selection — Logic Modules (for E51SCN Sensor Body Only)

	Type	Description	Timing Range ③	Catalog Number
Reset time is 25 mS minimum. Rated NEMA 4, 4X and 13.	ON and OFF Delay	■ Adjustable delay between time object is sensed and time switch function occurs ■ Adjustable delay between time object leaves sensing field and time switch transfers back to non-sensing state	0.15 to 15.0 seconds	**E51MTB**

③ Repeatability of the timing cycle is ±1% at constant voltage, ambient temperature and reset time.

Fast turn product with typical one business day lead-time to shipment.

Model Selection — Receptacles

	Description	Style	Details	Cable Length	Catalog Number	
					Conduit Entrance	
					1/2" NPT	20 mm
Surface Mount	Conduit entrance, front or rear mounting	2-wire, AC/DC	—	—	**E51RA**	**E51RA20**
		4-wire, AC	Gray	—	**E51RC**	**E51RC20**
			Black ①	—	**E51RCB**	**E51RCB20**
		4-wire, DC	—	—	**E51RN**	**E51RN20**
Built-In Mini-Connector	Epoxy filled receptacle with pre-wired Mini-Connector	2-wire, AC/DC	3-pin	—	**E51RAP3**	—
		4-wire, AC	5-pin	—	**E51RCP5**	—
		4-wire, DC	5-pin	—	**E51RNP5**	—
Pigtail with Mini-Connector	Epoxy filled receptacle with Mini-Connector mounted on 3 foot (900 mm) cable	2-wire, AC/DC	3-pin	3 feet (0.9m)	**E51RAPT3**	—
		4-wire, AC	5-pin	3 feet (0.9m)	**E51RCPT5**	—
		4-wire, DC	5-pin	3 feet (0.9m)	**E51RNPT5**	—
Prewired Cable	Epoxy filled receptacle with pre-wired 16 gauge, yellow jacketed, type SOOW-A cable. Cable enters through hole threaded for conduit	2-wire, AC/DC	3-conductor	8 feet (2.4m)	**E51RAS**	**E51RA20S**
				12 feet (3.6m)	**E51RAS12**	—
				20 feet (6m)	**E51RAS20**	—
		4-wire, AC	5-conductor	8 feet (2.4m)	**E51RCS**	**E51RC20S**
				12 feet (3.6m)	**E51RCS12**	—
				20 feet (6m)	**E51RCS20**	—
		4-wire, DC	5-conductor	8 feet (2.4m)	**E51RNS**	**E51RN20S**
				12 feet (3.6m)	**E51RNS12**	—
				20 feet (6m)	**E51RNS20**	—

① Black receptacle is for color compatibility with E51SCN sensor body.

Fast turn product with typical one business day lead-time to shipment.

See listing of compatible connector cables below.

Model Selection — Compatible Connector Cables ①

	Voltage Style	Number of Pins	Gauge	Length	Catalog Number	Pin Configuration/Wire Colors (Face View Female Shown)
Standard Cables — Mini Style						
Mini Style Straight Female Current Rating @ 600V 2-pin: 13A 3-pin: 13A 4-pin: 10A 5-pin: 8A	—	3-pin	16 AWG	6 feet (2m)	**CSMS3F3CY1602**	1-Green 2-Black 3-White
	—	5-pin	16 AWG	6 feet (2m)	**CSMS5D5CY1602**	1-White 2-Red 3-Green 4-Orange 5-Black

① For a full selection of connector cables, see **PG.05.05.T.E**.

Stocked product, typical order quantities guaranteed in stock.

Wiring Diagrams (Pin numbers are for reference, rely on pin location when wiring)

Operating Voltage	Output ①	Terminal and Cable Models	Mini-Connector Models (Face View Male Shown)
2-Wire Sensors			
20 – 264V AC or DC 50/60 Hz	N.O. or N.C.	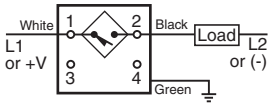	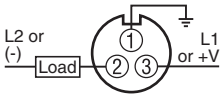
4-Wire Sensors			
120V AC 50/60 Hz	N.O. and N.C.	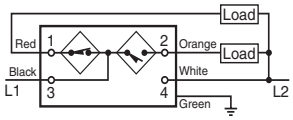	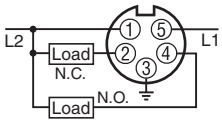
10 – 30V DC	N.O. and N.C. NPN	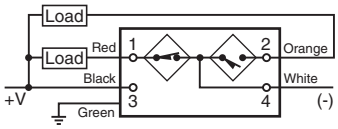	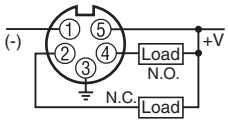
	N.O. and N.C. PNP	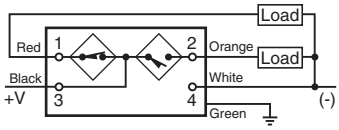	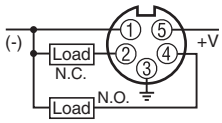

① Changing light/dark switch on sensor head will reverse output function (N.O. becomes N.C., and N.C. becomes N.O.).

Model Selection — Accessories

	Description	Catalog Number	Approximate Dimensions in Inches [mm]
Universal Mounting Bracket	1 hole, includes mounting hardware, stainless steel	**E51KH2**	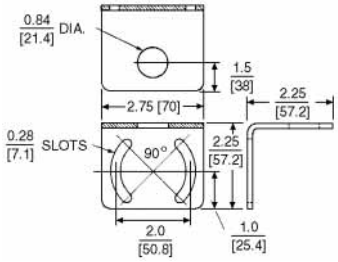
Universal Mounting Bracket	2 hole, includes mounting hardware, steel	**E51KH4**	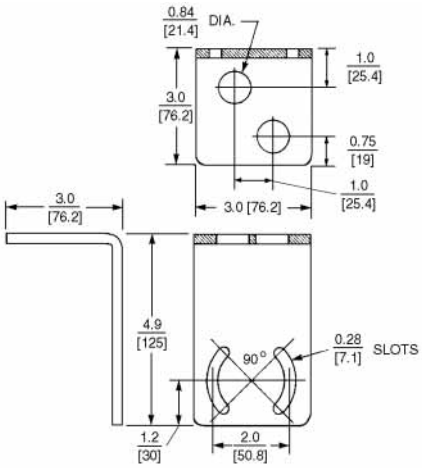

Stocked product, typical order quantities guaranteed in stock.

Model Selection — Accessories (Continued)

	Description	Catalog Number	Approximate Dimensions in Inches [mm] Except Where Noted
Machine Mounting Bracket	Zinc die cast	**E50KH3**	**NOTE:** Dimensions in mm [Inches] 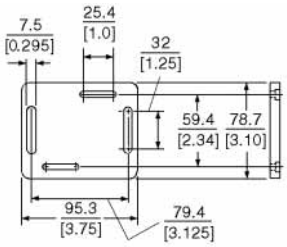
Stand-Off Mounting Bracket	Steel	**E51KH3**	**NOTE:** Dimensions in mm [Inches] 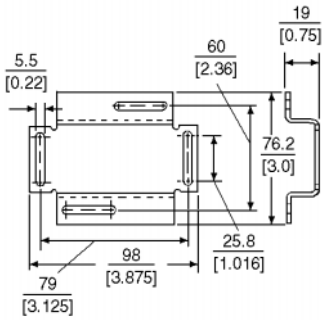
Remote Sensor Head Assembly	Permits mounting sensor head up to 3 feet (0.9m) from sensor body	**E51KRM**	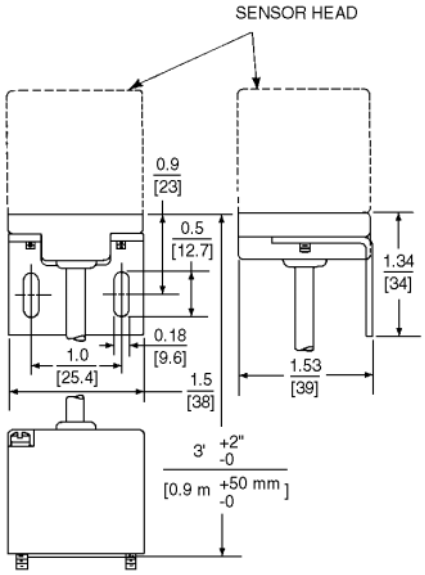
Connector Cables	A variety of cables, connector blocks and accessories	See **PG.05.05.T.E**	

Stocked product, typical order quantities guaranteed in stock.

Specifications

Description	Specification
Output Ratings (NEMA D150) AC/DC Models AC Models DC Models	 0.5A continuous 1A continuous 0.6A continuous
Protection	Latching short circuit protection on 2-wire AC/DC and 4-wire DC models
Indicator LEDs	Lights when output is ON. One LED for each output
Enclosure Material	Zinc die cast
Gasket Material	Viton
Enclosure Ratings	NEMA 3, 3S, 4, 4X, 6, 6P, 12 and 13 (IP67) E51SCN Sensor Body only: NEMA 4, 4X and 13 ①
Hazardous Locations Ratings Class I Class II Class III	 Division II — GRPS ABCD Division II — GRPS F and G Division 2
Temperature Range	-13° to 158°F (-25° to 70°C)
Torque Requirements	Switch Body Screws: 25 – 30 in-lb; Sensing Head Screws: 14 – 18 in-lb
Vibration	10 – 55 Hz, 1 mm amplitude
Shock	30g, 11 mS, 1/2 sine wave
Humidity	95% non-condensing

① NOTE: Our products conform to NEMA tests as indicated, however, some severe washdown applications can exceed these NEMA test specifications. If you have questions about a specific application, contact Eaton's Cutler-Hammer Sensor Applications Department at 1-800-426-9184.

Approximate Dimensions in mm [Inches]

Standard Sensor

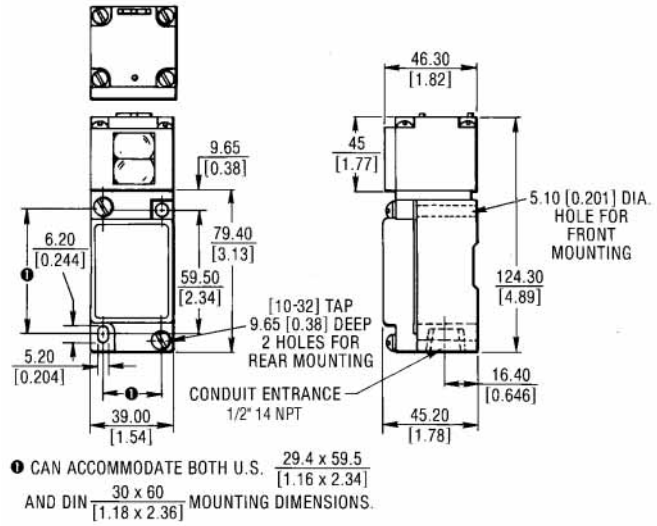
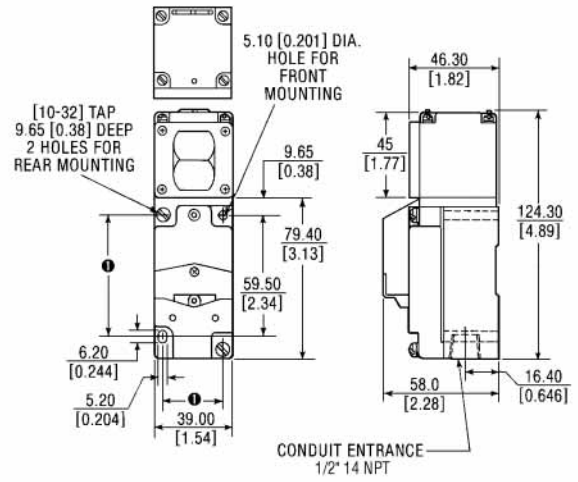
Sensor with Logic Module