Automated Xiria air-insulated Ring Main Units with RTU
IEC medium voltage switchgear up to 24 kV for Smart Grid applications

Managing Smart Grids with innovative automated Ring Main Units

Powering Business Worldwide

Automated Xiria

with Remote Terminal Unit (RTU)

Fully enclosed, maintenance free, air-insulated and compact Ring Main Unit switchgear with fixed vacuum interrupters

Smart solutions for Ring Main Units

As a result of changes in the electricity distribution network, optimum management of medium voltage grids is becoming increasingly important.

As part of this, the quality and reliability of the energy supply need to be improved and cost effective long-term investments must be made. All of this requires a simple station automation solution that makes it possible to exchange data.

Nowadays, the utilities are looking for automated medium voltage due to the need of mainly two goals:

- Improve standard IEEE reliability indices: SAIDI and SAIFI
- Overview of operational parameters of the electricity grid

Improving operational uptime for Ring Main Units

The utility companies are really focused in solving the problem of the outages in the grid, for that, these companies' measure IEEE (Institute of Electrical & Electronics engineers, Inc) reliability indices. These indices are:

- **System Average Interruption Frequency Index (SAIFI)**

  SAIFI is the average number of sustained interruptions per consumer during the year. It is the ratio of the annual number of interruptions to the number of consumers.

- **System Average Interruption Duration Index (SAIDI)**

  SAIDI is the average duration of interruptions per consumers during the year. It is the ratio of the annual duration of interruptions (sustained) to the number of consumers. If duration is specified in minutes, SAIDI is given as consumer minutes.

On the other hand, the utility companies need to have a good overview of the operational parameters of the grid like monitoring the Voltage, Current, Cos phi, and other relevant parameters like temperature for today's and future maintenance of the stations.

Operational uptime formulas

SAIFI = Total number of sustained interruptions in a year / Total number of consumers

SAIDI = Total duration of sustained interruptions in a year / total number of consumers

Implementing Remote Terminal Units in Xiria

The Ring Main Units (RMUs) are automated with Remote Terminal Units (RTUs) to solve the duration of power outages.

Eaton developed this Remote Terminal Unit especially focusing on Xiria Ring Main Unit applications for the medium voltage Smart Grid. The RTU enables utilities to reduce the duration of power outages.

Implementing automated Xiria reduces the downtime in three ways:

- Customers do not have to report an outage by phone anymore
- Service Engineers do not have to drive to the transformer substations
- A diagnose can be made more efficiently

Measurement and control on the medium voltage (MV) and transformer side of a RMU will reduce the outage time and the possibility of outages. In more advanced cases with directional fault indicators and some logic, outages can be solved within seconds after a fault occurred. After an anomaly has been detected, the RMU will automatically contact the operating center where the information is shown on a SCADA system and where actions can be taken to solve or prevent problems.

A RTU can also measure Current and Voltage at the low voltage (LV) side. By comparing these figures with the information from smart meters, deviations can be detected easily which indicates either a fault or an illegal power tap.

Eaton has developed a new Remote Terminal Unit to create an automated solution combined with Xiria Ring Main Units. The Remote Terminal Unit is a device for acquiring, processing, storing and transmitting information.

Functionality with the RTU

- Control and status monitoring up to 5 panels
- Alarming, event recording and data logging
- Programmable logic according to IEC 61131-3
- Communication (Ethernet and Wireless)
- IEC 61850 compliancy
- Web interface (monitoring)

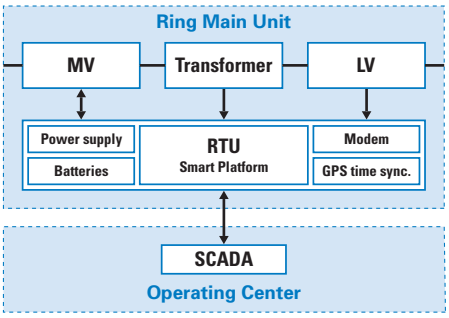

Automated Xiria versions

When the Eaton RTU is used different applications are possible. The two main configuration types are:

- **Semi-automated version (Xiria SA-version)**
  - Protection
  - Remote control
  - Communication (IEC 61850, IEC 60870-5-104, Modbus RTU master and slave, etc.)
- **Fully-automated version (Xiria FA-version)**
  - Protection
  - Remote control
  - Measuring (Voltage, Current, Direction)
  - Communication (IEC 61850, IEC 60870-5-104, Modbus RTU master and slave, etc.)

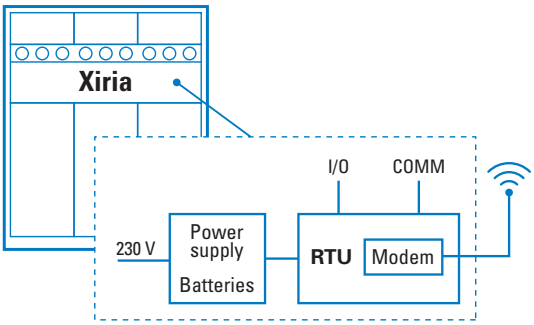

Xiria with RTU	12 kV	24 kV
Rated voltage	12 kV	24 kV
Impulse withstand voltage	75 / 95 kV	125 kV
Power frequency withstand voltage	28 kV	50 kV
Rated frequency	50/60 Hz	50/60 Hz
Internal arc resistance	20 kA - 1 s	16 kA - 1 s
Busbar system		
Rated normal current	630 A	630 A
Rated short-time withstand current	20 kA - 3 s	16 kA - 3 s
Rated peak withstand current	50 kA	40 kA
Circuit-breaker		
Rated normal current	200/500 A	200/500 A
Rated breaking current	20 kA	16 kA
Rated short-circuit making current	50 kA	40 kA
Rated short-time withstand current	20 kA - 3 s	16 kA - 3 s
Load break switch		
Rated normal current	630 A	630 A
Rated mainly active load breaking current at cos. phi 0.7	630 A	630 A
Rated short-circuit making current	50 kA	40 kA
Rated short-time withstand current	20 kA - 3 s	16 kA - 3 s

Eaton's Electrical Sector is a global leader in power distribution, power quality, control and automation, and monitoring products. When combined with Eaton's full-scale engineering services, these products provide customer-driven PowerChain™ solutions to serve the power system needs of the data center, industrial, institutional, public sector, utility, commercial, residential, IT, mission critical, alternative energy and OEM markets worldwide.

PowerChain™ solutions help enterprises achieve sustainable and competitive advantages through proactive management of the power system as a strategic, integrated asset throughout its life cycle, resulting in enhanced safety, greater reliability and energy efficiency. For more information, visit www.eaton.com/electrical.

Eaton Industries (Netherlands) B.V.
Medium Voltage Systems
P.O. Box 23
7550 AA Hengelo
The Netherlands

Customer contact
Tel.: +31 (0)74 246 40 10
Fax: +31 (0)74 246 44 45
E-mail: info.electric@eaton.com

Powering Business Worldwide

© 2012 Eaton Corporation
All rights reserved.

Form No. BR02200008U-v2
May 2012