High Current Output Inductive Proximity Sensors

Contents

Overview 1
Model Selection, Sensors 1
Model Selection, Accessories. 2
Wiring Diagrams 2
Specifications 2
Dimensions 2

Now there is an alternative to limit switches for position sensing on industrial vehicles. Cutler-Hammer® High Current Output features a continuous output current rating from 2 to 8A. These sensors from Eaton's electrical business are ideally suited to handle high current loads found on such industrial vehicles as aerial lift trucks, fork lifts, refuse trucks, cement mixers, dump trucks, hook and ladder trucks, front end loaders, farm equipment and hundreds of other vehicles that are constantly subjected to mechanical (shock, vibration, collisions) and environmental abuse (dirt, grease, ice, rain) that create havoc with mechanical devices.

Unless otherwise noted, the products contained in this document are not designed or intended for use in human safety applications.

Non-contact Sensing with the Ability to Handle High Currents in a Solid-State Output

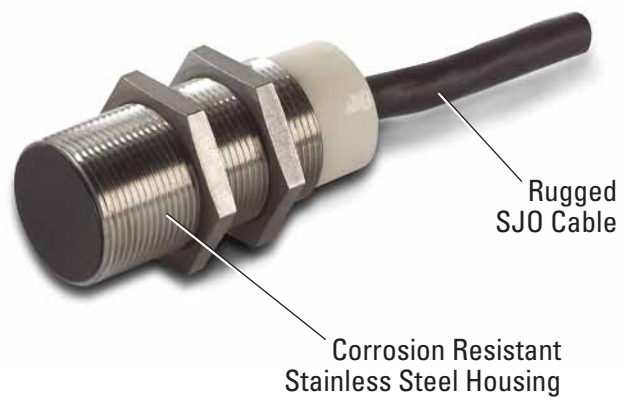

Product Features

- Solid-state output can handle up to 8A continuous
- Ideal for vehicle use to replace mechanical limit switches, typically required to handle high currents
- Wide voltage and temperature range covers most vehicle power supplies and operating environments
- Normally Open and Normally Closed isolated outputs
- SJO cable is available in custom lengths
- Dual colored 360° LED indicating light, green as power ON and red as output

Model Selection — High Current Output Sensors

	Operating Voltage	Sensing Range	Shielding	Output Type	Output Rating		Connection Type ①	Catalog Number
					Continuous	<100 mS Pulse		
4-Wire Sensors								
30 mm Diameter	10 – 55V DC	10 mm	Shielded	N.O. and N.C. (PNP)	3.5A	20A	2-Meter Cable	**E57-30JS10-H**
6-Wire Sensors ②								
30 mm Diameter	10 – 30V DC	10 mm	Shielded	N.O. and N.O., or N.C. and N.C. (NPN or PNP)	8A	50A	2-Meter Cable	**E57-30HS10-K**

① For additional cable length other than 2-meter, add desired length in meters to listed Catalog Number. Example: For an E57-30JS10-H with a 5-meter cable, order E57-30JS10-H**5**.
② 50 Amps surge, 12 Amp at 50% duty cycle and 8 Amp continuous.
Fast turn product with typical one business day lead-time to shipment.

For Customer Service in the U.S. call **1-877-ETN CARE (386-2273)**, in Canada call **1-800-268-3578**.
For Application Assistance in the U.S. and Canada call **1-800-426-9184**.

Model Selection — Accessories

Description	Reference
Mounting Brackets and Other Accessories	See **PG.05.03.T.E** and **PG.05.04.T.E**

Wiring Diagrams

4-Wire PNP

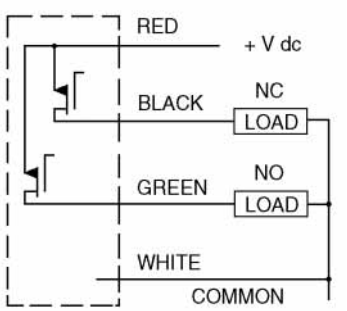

N.O./N.O. Output Configuration — 6-Wire

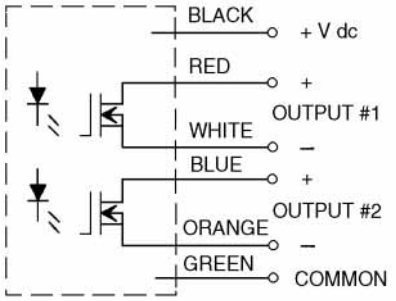

N.C./N.C. Output Configuration — 6-Wire

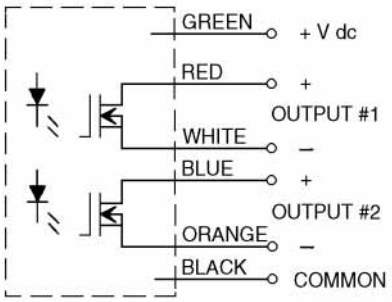

Specifications

	4-Wire Sensors	6-Wire Sensors
Operating Voltage	10 to 55V DC	10 to 30V DC
Switching Rate	250 Hz	100 Hz
Off-state Current	100 Aµ maximum	
Voltage Drop	1.2V	2.0V
Burden Current	10 mA @ 55 volts	30 mA @ 30 volts
Time Delay Before Availability	<100 mS	
Output Indicator LED	360 visibility	
Output Type	Solid-state	Solid-state, isolated
Protection	Transient and power on false pulse	
Enclosure Ratings	NEMA 4, 4X, 6, 6P, 12 and 13 (IEC IP67)	
Ambient Temperature Range	-40° to 158°F (-40° to 70°C)	
Barrel Material	303 stainless steel	
Cable	2m standard SJO water resistive (18 AWG)	
Shock	30g sine wave, 11 ms	
Vibration	10 to 55 Hz, 2 mm amplitude in all 3 planes	
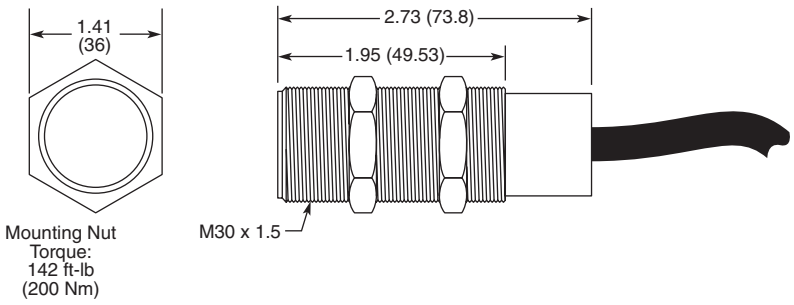
Approximate Dimensions in Inches (mm)