FP-5000 Series

Multi-functional Microprocessor-based Feeder Protective Relay

EATON

Powering Business Worldwide

EATON
Powering Business Worldwide

There's a certain energy at Eaton. It's the power of uniting some of the world's most respected names to build a brand you can trust to meet your every power management need. The energy created supports our commitment to powering business worldwide.

From power distribution to power quality and control, Eaton allows you to proactively manage your complete power system by providing electrical solutions that make your applications more reliable, efficient and safe. Visit Eaton.com/electrical.

All of the above are trademarks of Eaton Corporation or its affiliates. Eaton has a license to use the Westinghouse name in Asia Pacific. ©2010 Eaton Corporation.

General description of FP-5000

Eaton's FP-5000 is a multi-functional microprocessor-based relay protective device for medium voltage main, feeder and bus tie protection. With integrated features of protection, control and measurement, FP-5000 can provide functions of data sharing and remote controlling with remote upstream host.

- Complete metering function, including voltage, current, power, energy, minimum/maximum and demand.
- Programmable logic control functions for automatic transfer control of backup supply in main-tie-main distribution schemes.
- Trip logs, event logs and fault waveform capture for fault analysis and system restoration.
- Data logger for better planning and utilization of energy usage.
- Compact structure, drawout design.
- Meets ANSI,UL and CUL standards.

Application of FP-5000

FP-5000 comprehensive protective relay provides complete 3-phase and ground overcurrent and voltage protection. It may be used as primary protection on feeders, mains and tie circuit breaker applications, as well as backup protection for transformer, high voltage lines and differential protection.
FP-5000 takes full advantage of its microprocessor technology, providing users a wealth of data gathering functions. The relay performs complete self-checking to ensure its smooth operation. Its protective function is well applied in main and feeder circuits. Programmable logic control functions make the FP-5000 ideally suited for main-tie-main and main 1/main 2 distribution schemes.

The zone interlocking feature can be utilized for bus protection instead of an expensive and complicated bus differential (87B) scheme. FP-5000 works directly with Eaton Electric's DT 3000 and Digitrip MV relays.

FP-500 continuously monitors the complete trip and close circuits for readiness to trip. Open and close pushbuttons are located on the front of the relay for local breaker operation.

"Loss-of-vacuum" monitoring is activated when the breaker is open. Residual current is monitored and alarmed if detected.

When an electrical fault or disturbance occurs, the FP-5000 begins to store the following data:

- Voltage and current sampled data
- Calculated values
- Status of internal protection functions, logic, contact inputs and outputs. Retrieval and reviewing of the data is easy, helping with quick analysis and restoration of your electric power system.

When the FP-5000 is not responding to disturbances in the power system, it's providing metering information at the relay and remotely. It provides energy usage and demand reading, and can alarm when usage reaches a set value. Power factor measurements can be used for control reactive demand. Data trending can provide data profiles for up to 40 days.

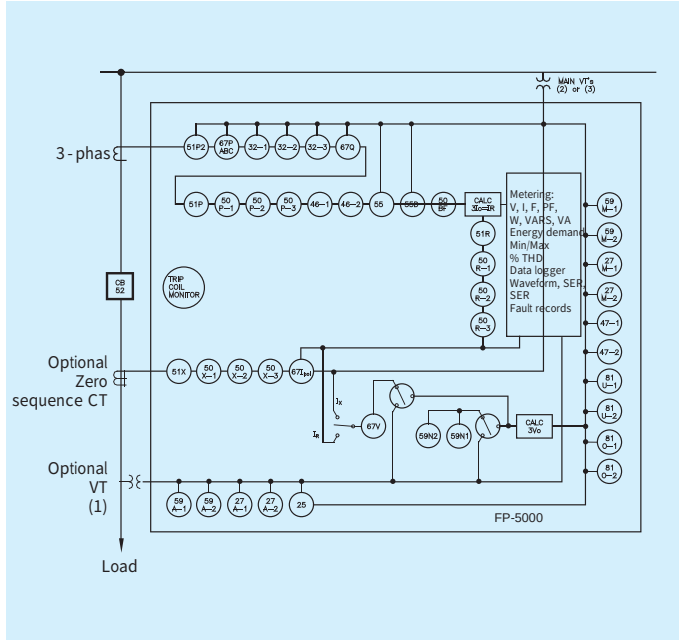

Figure 1 FP-5000 protective function diagram

Table 1： FP-5000 protective function list and corresponding ANSI standard number

ANSI standard number	Protective function description
25	Synchronization check
27A-1	Auxiliary voltage undervoltage
27A-2	Auxiliary voltage undervoltage (alarm)
27M-1	Main voltage undervoltage
27M-2	Main voltage undervoltage (alarm)
32-1	Power protection Phase 1
32-2	Power protection Phase 2
32-3	Power protection (alarm)
46-1	Current imbalance Phase 1
46-2	Current imbalance (alarm)
47-1	Voltage imbalance Phase 1
47-2	Voltage imbalance (alarm)
50BF	Breaker failure protection
50P	Phase instantaneous overcurrent protection with direction monitoring (67)
50R	Ground residual current instantaneous overcurrent protection with direction monitoring (67)
50X	Metered ground current instantaneous overcurrent protection with direction monitoring (67)
51P	Inverse time limit overcurrent with direction monitoring (67)
51R	Residual current inverse time limit overcurrent with direction monitoring (67)
51V/51P2	Inverse time limit overcurrent with direction and voltage latching
51X	Ground current inverse overcurrent protection
55A	Apparent power factor
55D	Fundamental power factor
59A-1	Auxiliary voltage overvoltage
59A-2	Auxiliary voltage overvoltage (alarm)
59M-1	Main voltage overvoltage
59M-2	Main voltage overvoltage (alarm)
59N-1	N-conductor overvoltage
59N-2	N-conductor overvoltage (alarm)
67P	Phase overcurrent (50P-1, 50P-2, 50P-3, 51P,51P2)
67G (67Ipol，67Q,67V)	Ground overcurrent (50R-1,2,3, 51R, 50X-1,2,3,51X)
8IO-1	Overfrequency protection
8IO-2	Overfrequency protection (alarm)
8IU-1	Low frequency
8IU-2	Low frequency (alarm)
	Circuit breaker alarm
	Cold load start
LOP	Loss of phase
THD	THD distortion alarm
	Apparent, reactive, real power alarms
	Zone interlocking

FP-5000 metering functions:

- Current (true RMS, phase angle and phase sequence)
- Current demand and peak current
- Voltage(true RMS, phase angle and phase sequence)
- Apparent power and apparent power demand
- Active power, active power demand and peak active energy
- Forward active energy,/reverse active energy/net active energy
- Reactive power, reactive power demand and peak reactive power
- Leading reactive energy/lagging reactive energy/net reactive energy
- Power factor
- Frequency
- Voltage and current
  % THD and THD magnitude
- Minimum/maximum with date/time stamps
- Trending (data time graph)

FP-5000 monitoring and data recording functions:

- Trip circuit monitoring
- Loss of vacuum monitoring
- Breaker wear
- Fault waveform capture (256 cycles, up to 16 events)
- Fault data logs (up to 16 events)
- Sequence of events report (up to 100 events)
- Clock (1ms time resolution)

Standard control functions plus user–configurable customer control capabilities:

- Remote open/close
- Optional local open/close
- Programmable I/O
- Programmable logic gates and timers: for example, used in main - tie - main distribution scheme
- Multiple setting groups (up to 4)

FP–5000 supports the following communication options:
Front RS–232 port

- NCOM communication protocol
- Rear RS - 485 port
- INCOM communication protocol
- Modbus communication protocol

Features, functions and benefits

- Complete protection, metering and control in a single compact case to reduce panel space, wiring and costs
- Flexible current, voltage and frequency protection and programmability to cover a broad range of applications while simplifying relay ordering procedures and list
- Integral test function reduces maintenance time and expense
- Relay self-diagnostics and reporting improves troubleshooting
- Trip circuit monitoring improves the reliability of the breaker operation
- Programmable logic control features additional auxiliary relay, timers and wiring
- Zone selective interlocking improves coordination and saves money compared to a traditional bus differential scheme
- Trip and event recording provides detailed information for analysis and system restoration
- 256 cycles of waveform capture aids in fault analysis
- Front RS-232 port and PowerPortTM software provides local computer access and a user-friendly, Windows® based interface for settings, and configuration and data retrieval
- Drawout case design for quick and easy relay removal and replacement
- Breaker open/close control from relay faceplate or remotely via communications
- Remote communications to Eaton Electric's PowerNet system or PC
- Free PowerPort utility software for local PC interface to the FP-5000 for relay settings, monitoring and control

Typical connection drawing of FP-5000 comprehensive protective relay

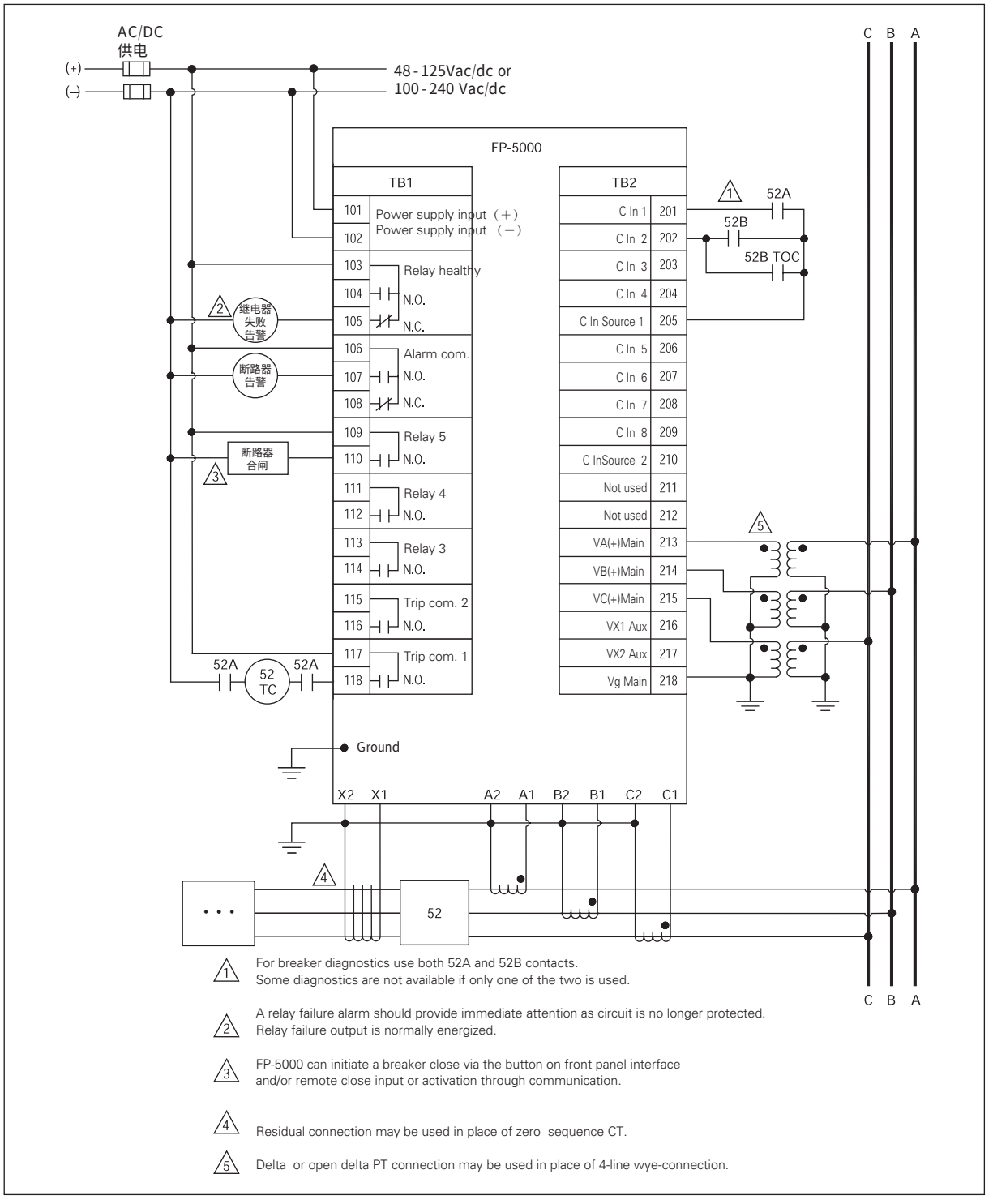

Figure 3:FP5000 typical connection drawing using YY PTs

Standards, certifications and technical data

Compliance

- UL Recognized, File # E154862
- UL 1053 (1994) Recognized.
- ANSI C37.90 (1989).
- EN 50011 (1991).
- EN 61000-6-2 (1999)

Emission Tests

- EN 5001 1(1991)--Group 1 Class A(CISPR-1 1，A级)
- FCC 47 CFR Chapter 1-Part 15 Subpartb，A级

Immunity Tests

- ANSI C37.90.1 (1989): Surge Withstand Capability.
- ANSI C37.90.2 (1995): EMI Immunity to 35 V/m.
- EN 61000-4-2 (1995): ESD Rating of 8 kV.
- EN 61000-4-3 (1997): Radiated EM Field at 10 V/m.
- EN 61000-4-4 (1995): Fast Transient Burst at 2 V/m.
- EN 61000-4-5 (1995): Surge Immunity Test.
- EN 61000-4-6 (1996): Conducted RF at 10 V/m.
- EN 61000-4-11 (1994): Voltage Dips and Variations.

Control Power

- Control voltage: 48/125V DC or 120Vac
- Operating voltage: 38V-150Vdc or 69V-132Vac
- Interruption ride-through time
- Standard current supply.20 cycle
- Power consumption: 20 VA maximum

Current Inputs

- Nominal (In): 1 ampere or 5 amperes.
- CT ratings: 2 x In continuous, 50 x In for 1 second
- CT burdens:
  -< 0.25 VA at 5 amperes (nominal)
  -< 0.05 VA at 1 ampere (nominal)

Voltage Inputs

- Nominal: 120 Vac.
- Operating range: 69 to 150 Vac.
- Burden: <0.015 at 120 Vac: 1 mW

Metering Accuracy

- Phase current: ±0.5%
- Ground current: ±0.5%
- Frequency: ±0.02 Hz.
- Phase angle: ±1℃
- Power metering accuracy: ±1.5%.
- Metering accuracy temperature range: 0℃ to 50℃
- Temperature range:±5% for operation below 0℃ and above 50℃.
- Clock automatically updated by PowerNet host
- Phase voltage: ±0.5%
- Input signal frequency requirements:
- 50 Hz nominal, 47 to 53 Hz (±5%)
- 60 Hz nominal, 57 to 63 Hz (±5%)
- Clock accuracy: Free running within 1 minute/month at 25℃.

Phase and Ground Overcurrent Protection

- Inverse characteristics: Mod, Very, Extremely
- TOC (51) pickup range: 0.1 to 4.0 in 0.01 steps.
- Time multipliers: 0.05 to 10.0 in 0.01 steps.
- IOC (50) pickup range: 0.1 to 20.0 per unit in 0.01 steps.
- Pickup accuracy: ±1% (at 0.1 to 2 per unit).
- Time delay: 0 to 9999 cycles in 1 cycle steps.
- Time accuracy: ±1% or ±30 ms.

Voltage Unbalance (47)

- Threshold (minimum voltage) 1 to 100 volts in 1 volt steps.
  % V2/V1: 4 to 40% in 1% steps.
- Time delay: 0 to 9999 cycles in 1 cycle steps.

Current Unbalance

- Threshold (minimum current) 0.1 to 20.0 per unit in 0.01 steps.
  % I2/I1: 4 to 40% in 1% steps.
- Time delay: 0 to 9999 cycles in 1 cycle steps.

Under/Overvoltage Protection

- Pickup range: 10 to 150 volts in 1 volt steps.
- Time delay: 0 to 9999 cycles in 1 cycle steps.

Under/Overfrequency Protection

- Pickup range: 45 to 65 Hz in 0.01 Hz steps.
- Time delay: 0 to 9999 cycles in 1 cycle steps.

Breaker Failure Protection

- Pickup range: 0.1 to 5.0 per unit in 0.01 steps.
- Time delay: 0 to 9999 cycles in 1 cycle steps.

Power Factor

- Trigger/reset threshold:
  0.5 lag to 0.5 lead in 0.01 steps.
- Time delay: 0 to 1000 seconds in 1 second steps.

Discrete Inputs

- Number of contact inputs: 8.
- Rating: 48 Vdc provided with internal ground only.

Output Contacts

- Number of output contacts: Five Form A and two Form C.
- Rating of Output Contacts
- Momentary:
- Make 30 A ac/dc for 0.25 seconds
- Break 0.25 A at 250 Vdc (resistive)
- Break 5 A at 120/240 Vac
- Continuous: 120/240 Vac/dc, 5 A at 30 Vdc

Logic and Control Functions

- Six programmable logic gates for AND, OR, NAND,
- NOR operations.
- Two latching (flip/flop) gates.
- Six timer gates provide on/off delays.

Communications

- Baud rate: 9600.
- Maximum distance: 10,000 feet (3,048 m).
- INCOM communication protocol
- Modbus communication protocol

RS-232 Communication, Front Panel

- Baud rate: 38.4 k, 19.2 k, 9.6 k.
- Connector standard 9-pin port, 3-wire.
- Protocol: INCOM.

Environmental Ratings

- Operating temperature:
  -40°C to +60°C (-40°C to +140°C)
- Product tested to +85°C.
- Storage temperature:
  -40°C to +85°C (-40°C to +185°C).
- Product tested to +85°C.
- Humidity: 5% to 95% relative humidity
- Altitude: 0 to 6,350 feet (0 to 2,500 m)

Figure 4: FP-5000 shape and dimension

Figure 5: FP-5000 cutout dimension

Dimensions

Behind Panel

- Height: 170.2 mm
- Width: 134.6 mm
- Depth: 175.3 mm

Front Panel

- Height: 288.0 mm
- Width: 196.1 mm
- Depth: 20.3 mm

Weight

- 12.51bs. (5.7kg)

Communication Software

Eaton provides two types of communication software. The first is free PowerPort. It runs on a PC or laptop for easy access to a single relay to change set points or configuration and to view metered values and stored data. The second package is PowerNet, a power management software package that is designed for continuous, remote monitoring of many devices. It provides all the functionality of PowerPort plus additional functions such as trending and graphics.

Ordering Information

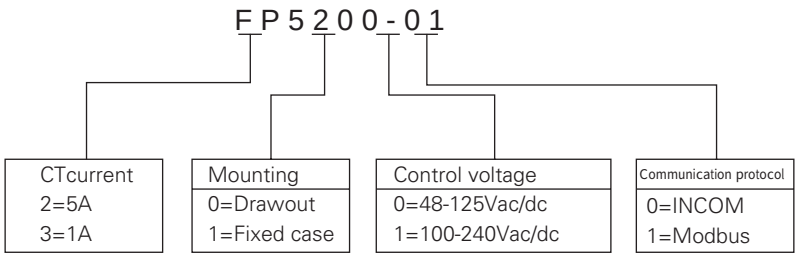

FP-5000 shape and dimensions and panel cutout dimension diagram

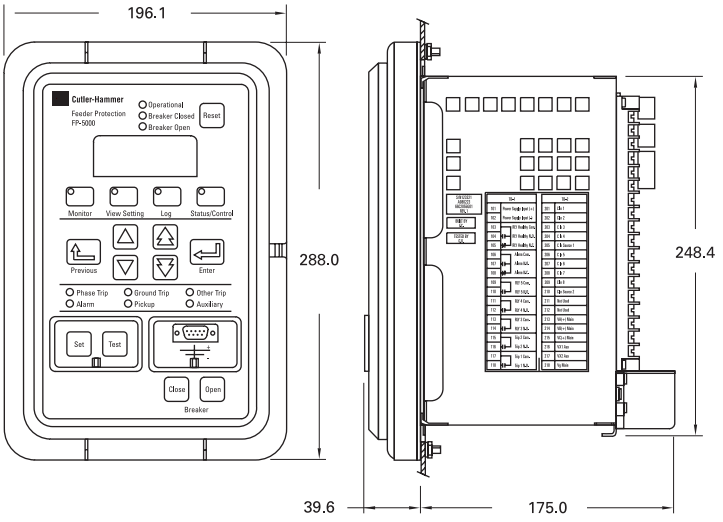

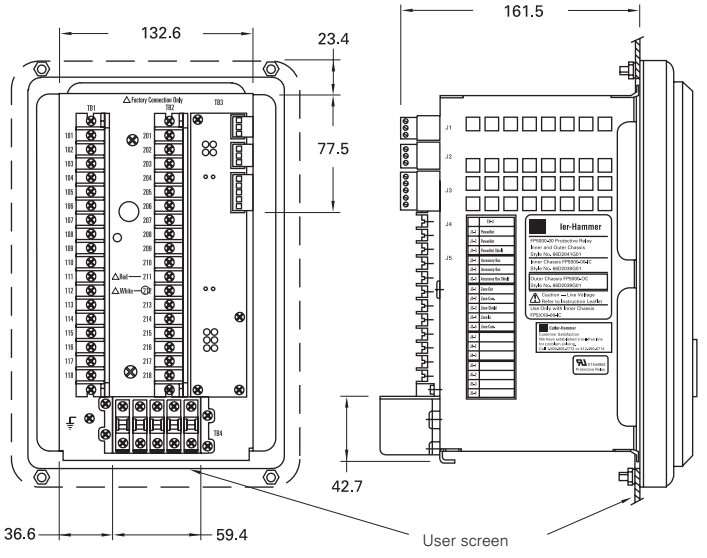

Figure 4: FP-5000 shape and dimension (mm)

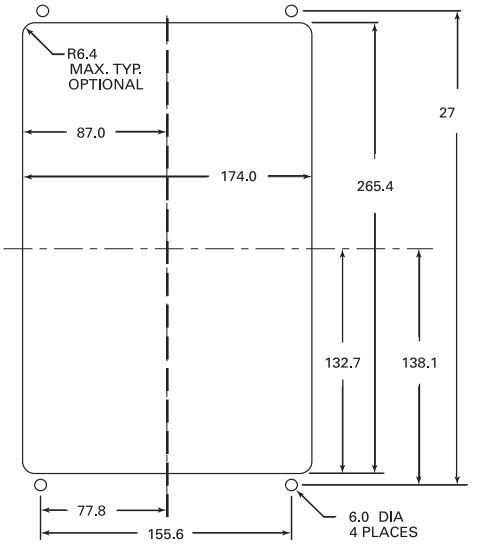

Figure 5: FP - 5000 cutout dimension (mm)

Remark

Eaton is dedicated to ensuring that reliable, efficient and safe power is available when it's needed most. With unparalleled knowledge of electrical power management across industries, experts at Eaton deliver customized, integrated solutions to solve our customers' most critical challenges.

Our focus is on delivering the right solution for the application. But, decision makers demand more than just innovative products. They turn to Eaton for an unwavering commitment to personal support that makes customer success a top priority. For more information, visit www.eaton.com/electrical.

Eaton Corporation
Asia Pacific Headquarter
No.3, Lane 280, Linhong Road,
Changning District,
Shanghai 200335
Tel: 86-21-52000099
Fax: 86-21-52000200

© 2011 Eaton Corporation
All Rights Reserved
Printed in China
FP5000-EN(08-2011)

Eaton is a registered trademark of Eaton Corporation.

All trademarks are property of their respective owners.

Powering Business Worldwide