Pow-R-Way III: DC rated busway

Eaton has been manufacturing quality bus duct products for over 70 years and has continued to invest in its brands of busway products using the latest materials. This innovation has helped make Eaton's Pow-R-Way III® busway one of the strongest, lightest and quickest products to install.

Innovative products

Due to its lower installed cost, Pow-R-Way III busway is being used in previously non-traditional applications such as data centers and telecommunication switching centers, and on UPS loads. As power consumption increases in these applications, the need to reduce heat and improve efficiency rises. Applying direct current (DC) in the power distribution system may help to reduce heat and increase efficiency.

Pow-R-Way III DC rated busway can be applied throughout the power distribution system within a facility. By doing so, facility designers can also reduce the AC to DC conversions, saving money, reducing heat and improving efficiency.

Pow-R-Way III DC rated busway features

- **Safety**—Meets UL® 857, CSA® and IEC 60439 safety standards. Totally enclosed conductors
- **Savings**—Has a lower installed cost compared to traditional cable and conduit installations
- **Efficiency**—Has a lower voltage drop than traditional cable, translating into lower heat and energy consumption
- **Reconfigurable**—As facility layouts change, can be moved and reused to match these changes, saving additional time and money

Services and programs

- **Field measurement service**—Eaton will send factory-trained personnel to measure the required busway layout to ensure an exact fit
- **Express bus Quick-Ship℠ program**—When you need busway on the job site quickly
- **Final Field Fit Program**—Ensures an exact fit the first time given job site dimensional uncertainties
- **Product installation training**—Eaton will send factory-trained personnel to teach installing contractors how to properly handle and install Pow-R-Way III busway

For additional information on the products and services mentioned in this product aid, please contact your local Eaton sales professional.

EATON

Powering Business Worldwide

Ratings

- 600 Vdc UL, 750 Vdc maximum
- Two-wire with multiple grounding options: housing, internal and isolated ground
- 100A up through 7500A
- Copper or aluminum
- Feeder or plug-in busway

Product configuration

Pow-R-Way III DC rated busway can be sized by ampere rating alone or by ampere rating and maximum allowable voltage drop. Available product fittings include:

- Gear connections—standard or custom designed
- Elbow bends—90° to 180°
- "T" fittings
- "X" fittings
- Cable tap boxes
- Power tap-off plug-in units

DC rated plug-in units

When tapping power off the busway to feed various loads within a facility, DC rated circuit breaker plug-in units are available rated from 15A to 800A.

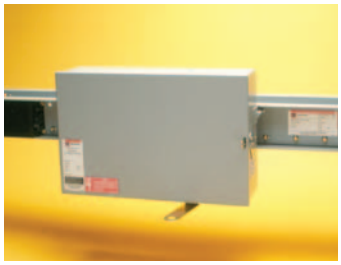

Pow-R-Way III DC Rated Plug-In Units

Catalog Number	Ampere Rating ❶	Interrupting Rating at 600V	Interrupting Rating at 750V
P3BHFDDC3 _ _ _N	15–150	35	42
P3BHJDDC3 _ _ _N	70–250	35	42
P3BHKDDC3 _ _ _N	100–400	35	42
P3BHLDDC3 _ _ _N	300–600	35	20
P3BHMDLDC3 _ _ _N	300–800	35	—

❶ Ampere rating is represented by a three-digit number. For a 70A plug-in unit, the catalog number would be: P3BHFDC3070N.

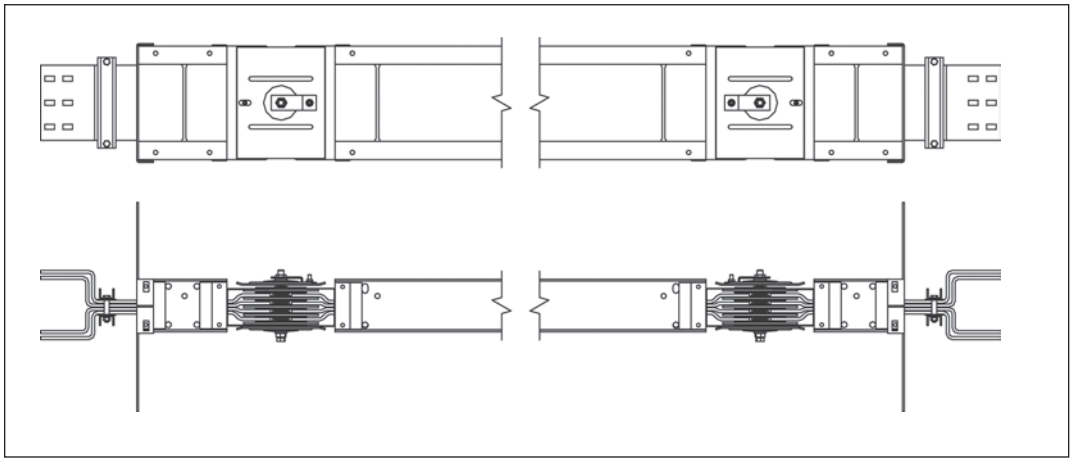

Pow-R-Way III DC busway

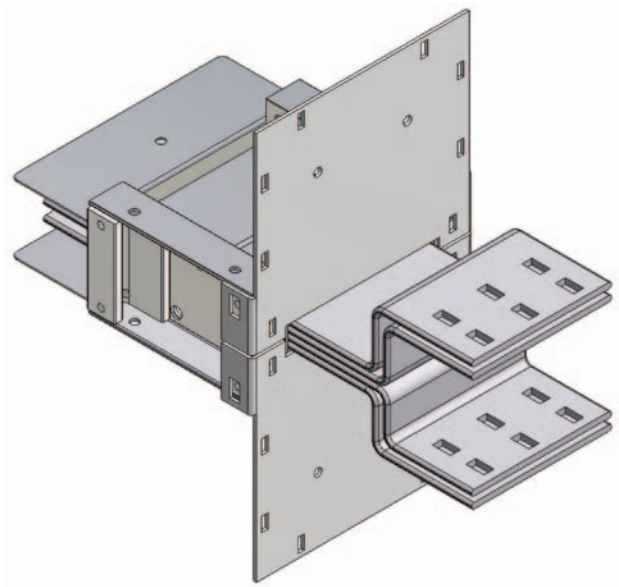

Gear connection

Eaton Corporation
Electrical Sector
1111 Superior Ave.
Cleveland, OH 44114
United States
877-ETN-CARE (877-386-2273)
Eaton.com

© 2010 Eaton Corporation
All Rights Reserved
Printed in USA
Publication No. PA01701005E / Z10457
December 2010

Powering Business Worldwide

PowerChain Management®

PowerChain Management is a registered trademark of Eaton Corporation.

All other trademarks are property of their respective owners.