Technical Data

Effective July 2012

Vacuum Interrupters

Installation and Attention

- Before installation, please clean the adapters, electrodes and ceramic surface with alcohol wiper. Make sure the good electrical contact condition between VIs and equipments.
- During installing VI, please fix the movable electrode first and make sure it cannot be twisted to damage the bellow. It's very important to keep alignment of both side electrodes less than 2mm, and keep good verticality of VI.
- If use the movable electrode fix method with the electric clip or driving components, please avoid transferring pulling force to electrode during screw the bolt tight. For the outside thread movable electrodes, please avoid twisting the electrodes during connect to adapters. (Please see the reference Pic. 1 & Pic. 2)
- Please grease the bolts with lubrication before using torque wrench to screw the bolts. The bolts intensity must be greater than 8.8. The screw-in length, please refer to the VI outside drawings.
- The bearing unit is required during VI working. The bearing unit must keep the good verticality of VI tube, and keep the bellows out of twist force and the movable electrode moving easily.
- After completed VI installation, please setup the relevant parameters according to VI technical specification.
- DO NOT demount the VIs repetitively and prevent damaging electrode threads during installation. DO NOT twist movable electrode. And DO NOT compress bellows excessively, or twist and scratch bellows.
- The press force on both VI sides cannot be over the static safety pressure on technical specification.
- Prohibit impact or hammer VIs with hard tools. Prohibit use the incompliant contact stroke.

Application

- Please check VI withstand level with withstand test and check vacuum level with portable vacuum tester regularly.
- Working voltage and current cannot over the rated values.

EATON

Powering Business Worldwide

Checking and Acceptance

- Check the outside packaging first. After open the packaging, check VI appearance and product label, type, tube number. Shaking the VI tube, listen whether there is any abnormity. Tube ceramic should be in good condition without any mechanical damage.
- Withstand test. Before the VI 1st using, please check the withstand level with withstand test. Before the test, please clean the ceramic with alcohol wiper first. Then adjust VI to the rated contact stroke (Breaker is open position), and add 1 min rated withstand voltage on both sides of VI. If the readings of test instrument indicator break or slip, please DO NOT use.
- If find any unqualified VI after above tests, please contact our quality department timely, and we will solve it as soon as possible.

Maintenance

- If find VIs are affected by moisture before 1st using, please place it in oven and dry in 70℃~80℃ for 2 hours before using.
- The VIs should be checked regularly even for the long time store VIs. If VIs affected with moisture, please following above 4.1, then store the VIs in proper condition.
- Storage condition. Store in dry and ventilating house, free of dust and corrosive gas. Storage temperature is -30℃~ +40℃. Storage period is 30 years (Before assembled in breakers).

Recommended tighten torque is showing as below:

Electrode	Screw	Rated tighten torque (Tolerance +/-5%)
Movable electrode	M8	25Nm
	M10	30Nm
	M12	40Nm
	M16	60Nm

Electrode	Screw	Rated tighten torque (Tolerance +/-5%)
Fixed electrode	M8	30Nm
	M10	50Nm
	M12	60Nm
	M16	130Nm

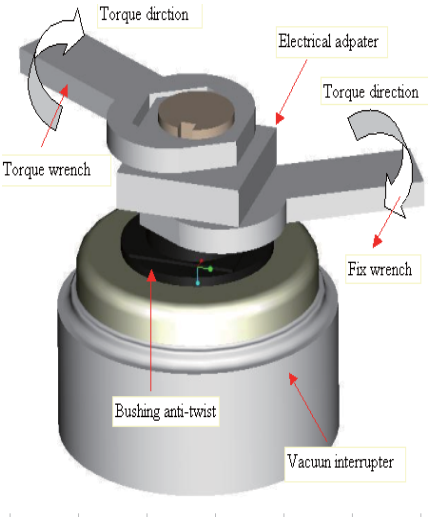

Pic 1

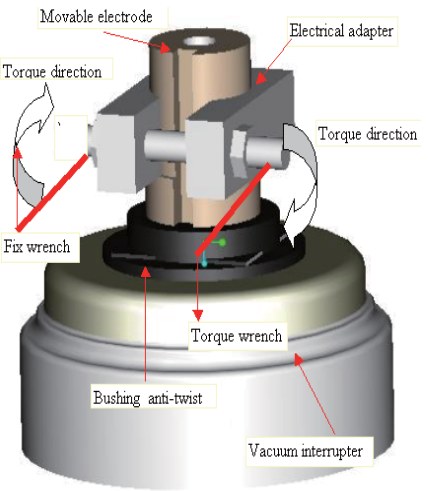

Pic 2

Electrical Sector Asia Pacific
No.3, Lane 280, Linhong Road,
Changning District,
Shanghai 200335
Tel: 86-21-52000099
Fax: 86-21-52000200

© 2012 Eaton Corporation
All Rights Reserved
Printed in China
July 2012

Eaton is a registered trademark of Eaton Corporation.

All other trademarks are property of their respective owners.

Powering Business Worldwide