Technical Bulletin

MatchMate Plus® Fitting Locators

For Use With the Aeroquip FT1330 or FT1380 “M” Series Die Cages

- Simplifies crimping of TTC and TTC12 fittings
- Easy to install
- Perfectly positions the fitting within the crimp cage every time

Consistent crimping of MatchMate Plus fittings is greatly simplified when using Eaton Aeroquip’s fitting locators. The locators are designed for easy installation and use on the Aeroquip FT1330 or FT1380 “M” series die cages noted below.

When using the locators, a crimp machine operator no longer needs to “eyeball” the crimp location on the fitting. The locators allow the operator to position the fittings for consistent crimping and optimal performance of MatchMate Plus assemblies.

The locator kits can be ordered as part number FT1330-XL.

Locator Kit includes—
Locators (one each): -4, -4P, -8, -8P, -10, -10P, -12, -12P, -16
Locators (two each): -6, -6P
Installation instructions

Locator Suffix	Die Cage Suffix	MatchMate Plus Hoses			
		GH663 GH194	GH793 GH195	GH781	GH493
-4, -4P	-M150	-4	-4	-4	
-6, -6P	-M180	-6			
	-M210		-6	-6	-6
-8, -8P	-M240	-8	-8	-8	
-10, -10P	-M280		-10	-10	-8
-12, -12P	-M320	-12	-12	-12	-12
-16	-M370	-16	-16	-16	-16
None Required	-M465		-20	-20	-20

Selecting the Proper Locator and Die Cage Combination

Using the chart on the front of this bulletin, match the proper locator and die cage. When examining the dies, place the front of the die cage down. The individual dies must be examined to determine if the "standard" (example: -4) or "P" style (example: -4P) should be used, as shown in Figures 1 and 2.

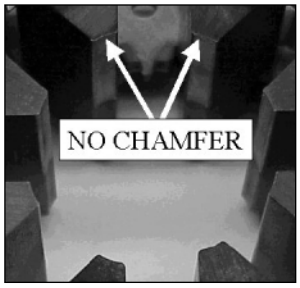

Figure 1.
Dies with NO CHAMFER use the "standard" locators.

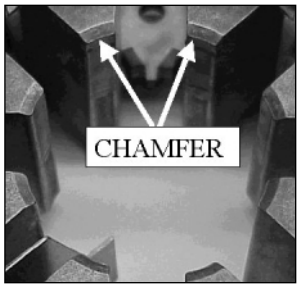

Figure 2.
Dies with a CHAMFER use the "P" locators.

Installation Instructions

1. Using a 5/32-inch allen wrench, remove the bottom bolt and sleeve from the die cage.

2. Slide the locator over the 3/8-inch diameter sleeve, and re-install as shown in figure 1.

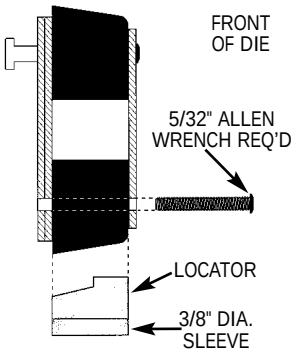

Figure 1.

Crimping Procedure Using the Locator

1. Establish the setting on the crimp machine.

2. Assemble the fitting onto the end of the hose, making certain that the fitting has "bottomed-out" against the squarely cut hose.

3. Insert the fitting into the crimp cage, then locate the back edge of the socket against the locator as shown in figure 2.

4. Complete the crimping cycle in the usual manner.

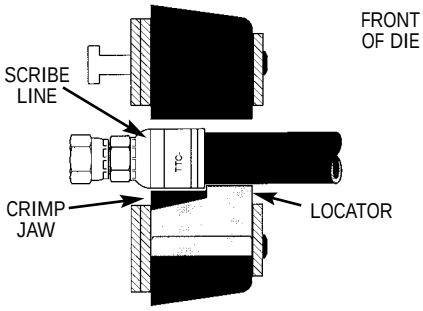

Figure 2.

Eaton Aeroquip
Industrial Division
3000 Strayer Road, P.O. Box 631
Maumee, Ohio 43537-0631
419/867-2600, Fax: 419/867-2629
www.aeroquip.com

Specifications subject to change without notice

©2000 Eaton Aeroquip, All Rights Reserved