EFX IO08 Input/Output Module

Output expansion module for EFX Controllers
CANopen interface
Surface electrostatically coated (cathodic immersion) 10...32V DC

Technical Data	8 Digital / PWM Outputs With Integrated Current Measurement
Housing	Die-cast zinc housing with 8 outputs and terminal chamber surface electrostatically coate (cathodic immersion), black
Dimensions (l x w x h)	227 x 77 x 39 mm (without cable gland)
Installation	Screw connection by means of 3 M5 x l screws to DIN 912 or DIN 7984
Connection Operating voltage and CAN bus Outputs CANin/CANout	7-pole terminal strip with CAGE CLAMP ® connection technology (2 x 2-pole/1 x 3-pole) 0.08...4 mm2 (AWG 28...AWG 12), nominal current 20 A Identical potentials can be linked using a jumper header (GND and UB potentials linked upon delivery) Cable entry via M16 cable gland 8 x M12 connector (socket), 5-pole
Weight	1.2 kg
Outputs can be configured as switching current per output total current	8 digital, positive-switching (high side) PWM channel, or current-controlled channel max. 4 A max. 16 A
Operating voltage U_B	10...32 V DC
Current consumption	≤ 50 mA (without external load at 24 V DC)
Operating temperature	– 40...85°C
Storage temperature	– 40...85°C
Protection	IP 67
Interface	CAN interface 2.0 B, ISO 11898
Baud rate	20 Kbits/s...1 Mbit/s (default setting 125 Kbits/s) (adjustable using hex-code switch in the terminal chamber or via the CANopen object directory)
Storage temperature	20 Kbits/s...1 Mbit/s (default setting 125 Kbits/s) (adjustable using hex-code switch in the terminal chamber or via the CANopen object directory)
Communication profile	CANopen, CiA DS 301 version 4, CiA DS 401 version 2.1
Node ID (default)	hex 20 (= dec 32) (adjustable using 2 hex-code switches in the terminal chamber or via the CANopen object directory)
Indication	1 LED green (PWR) 1 LED red (diagnosis, DIA) 8 LEDs yellow (status of the outputs)

Powering Business Worldwide

Connecting and operating elements

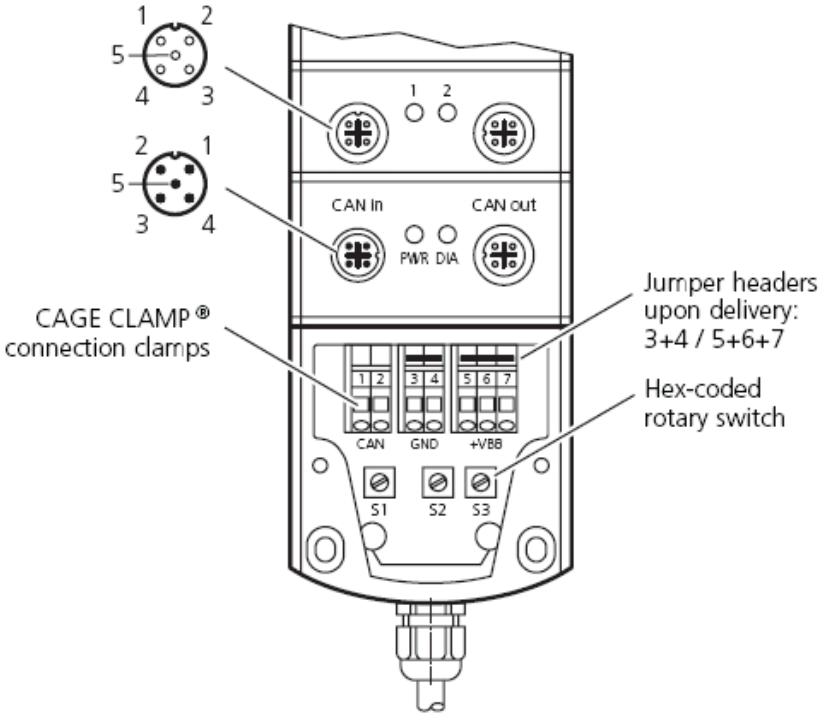

Hex-code switch coding

Switch	Position	Description
S1 Baud rate	0 1 2 3 4 5 6 7 8...E F	1000 Kbits/s 800 Kbits/s 500 Kbits/s 250 Kbits/s 125 Kbits/s 100 Kbits/s 50 Kbits/s 20 Kbits/s not defined adjustment via object directory (default)
S2	0...7	high nibble, e.g. 20 hex (= 32 dec)
Node ID_H	F	adjustment via object directory (default)
S3	0...E	low nibble, e.g. 20 hex (= 32 dec)
Node ID_L	F	adjustment via object directory (default)

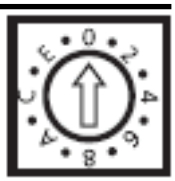

Operating states (LEDs)

LED	Status	Description
PWR (green)	OFF ON 2.0 Hz	no supply voltage module in stand-by mode CANopen status: PREOPERATIONAL / PREPARED outputs = OFF module active CANopen status: OPERATIONAL outputs are updated
DIA (red)	OFF ON	communication OK communication disturbed • node guard / heartbeat error (if node guarding / heartbeat is activated) • no synch objects (if synch monitoring is activated)
OUT (yellow)	ON	binary output: output switched (ON) analogue output: PWM preset value ≠ 0 current preset value > 20

EFX IO08	Characteristics of the outputs
Digital Outputs	8 semiconductor outputs; short-circuit and overload protected Switching voltage 10...32 V DC Switching current max. 4 A Total current max. 16 A The current measurement of 2 channels each can be selected by means of the wire connections. The following channels are combined: 1+2, 3+4, 5+6, 7+8
PWM Outputs	With the configuration as "PWM output" two outputs each are combined (1+2, 3+4, 5+6, 7+8). PWM frequency 20...250 Hz Pulse duty factor 50...1000 ‰ Resolution 1 ‰ Switching current max. 4 A Total current max. 16 A
Current Outputs	With the configuration as "current-controlled output" two outputs each are combined (1+2, 3+4, 5+6, 7+8). PWM frequency 20...250 Hz Control range 20...1000 mA / 80...4000 mA Control resolution 1 mA / 4 mA (see control parameters) Setting resolution 1 mA Control characteristics can be set via the object directory (see control parameters) Accuracy ± 2% FS Switching current max. 4 A Load resistance min. 12 / 3 Ω (at UB = 12 V DC) min. 24 / 6 Ω (at UB = 24 V DC)
Control parameters	By indicating the max. load current [mA] for each output pair the respective control or value range (1000 or 4000 mA) is automatically selected. In addition the P/I behaviour of the current controller can be parameterised for each output pair.
Free-wheel diode is integrated!	To avoid errors in the measuring result, no external free-wheel diode must be connected in parallel with the load in the "current-controlled output" operating mode.
	Test standards and regulations
Climatic test	Damp heat to EN 60068-2-30, test Db (≤ 95% rel. humidity, non-condensing), Salt mist test to EN60068-2-52, test Kb, severity level 3, Protection test to EN 60529
Mechanical resistance	Vibration to EN 60068-2-6, test Fc, Shock to EN 60068-2-27, test Ea, Bump to EN 60068-2-29, test Eb
Immunity to conducted interference	to ISO 7637-2, pulses 2, 3a, 3b, severity level 4, function state A to ISO 7637-2, pulse 5, severity level 1, function state A to ISO 7637-2, pulse 1, severity level 4, function state C
Immunity to interfering fields	directive 95/54/EC at 100 V/m (e1 type approval) and DIN EN 61000-6-2 :2001 (CE)
Interference emission	directive 95/54/EC (e1 type approval) and DIN EN 61000-6-4 :2001 (CE)

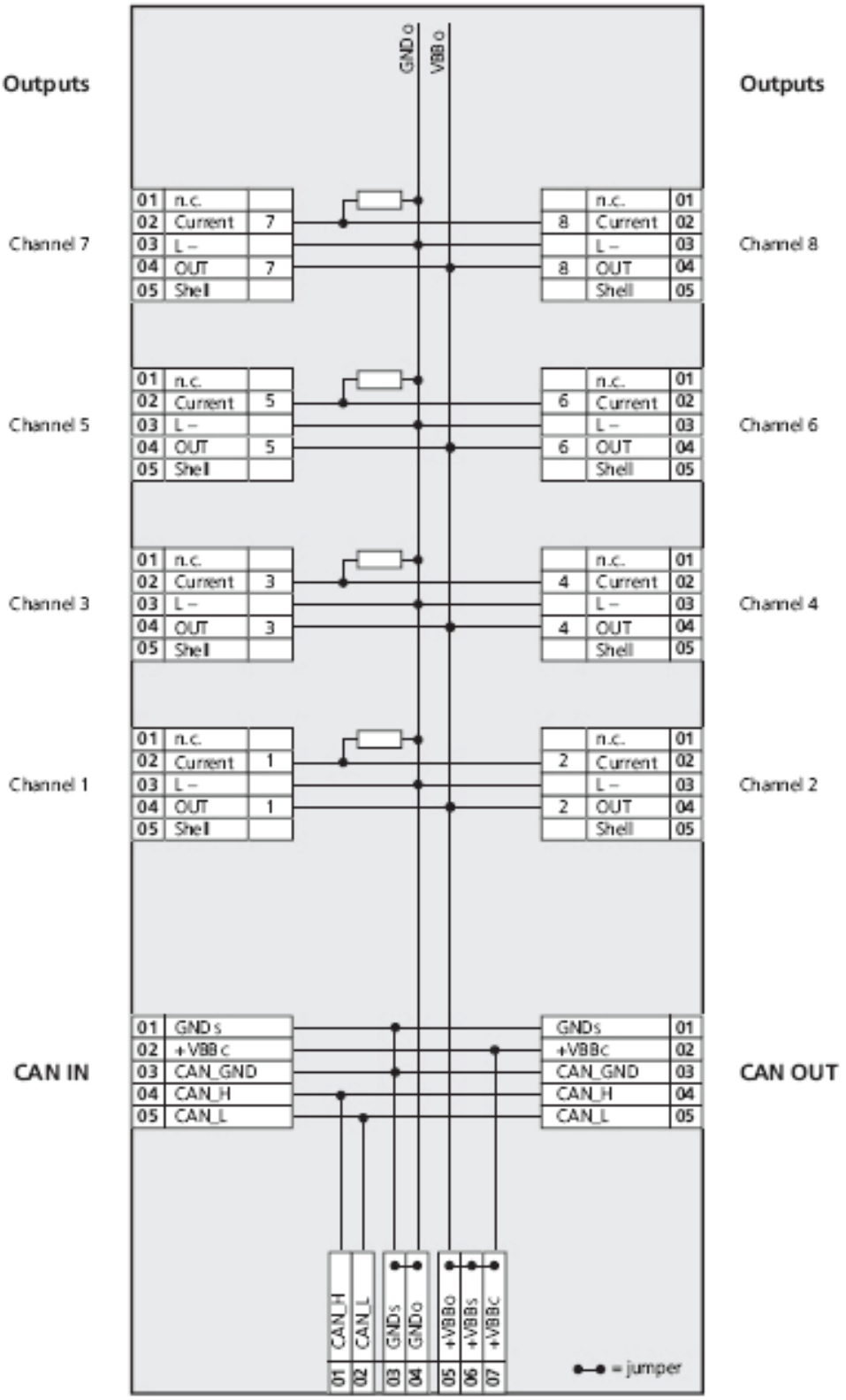

Abbreviations:

CAN_H = CAN interface (high)
CAN_L = CAN interface (low)
GND_0= ground (output)
GND_S = ground (module)
PWM = output for pulse-width modulated signals
VBB_C = operating voltage (via CANin/CANout plug)
VBB_0 = operating voltage (output)
VBB_S = operating voltage (module)

Eaton
Hydraulics Group USA
14615 Lone Oak Road
Eden Prairie, MN 55344
USA
Tel: 952-937-9800
Fax: 952-294-7722
www.eaton.com/hydraulics

Eaton
Hydraulics Group Europe
Route de la Longeraie 7
1110 Morges
Switzerland
Tel: +41 (0) 21 811 4600
Fax: +41 (0) 21 811 4601

Eaton
Hydraulic Group Asia Pacific
11th Floor Hong Kong New
World Tower
300 Huaihai Zhong Road
Shanghai 200021
China
Tel: 86-21-6387-9988
Fax: 86-21-6335-3912

Powering Business Worldwide

© 2011 Eaton Corporation
All Rights Reserved
Printed in USA
Document No. E-ELMD-MS001-E
May 2011