EATON | Char-Lynn

T-Brake Motor

Parts Information

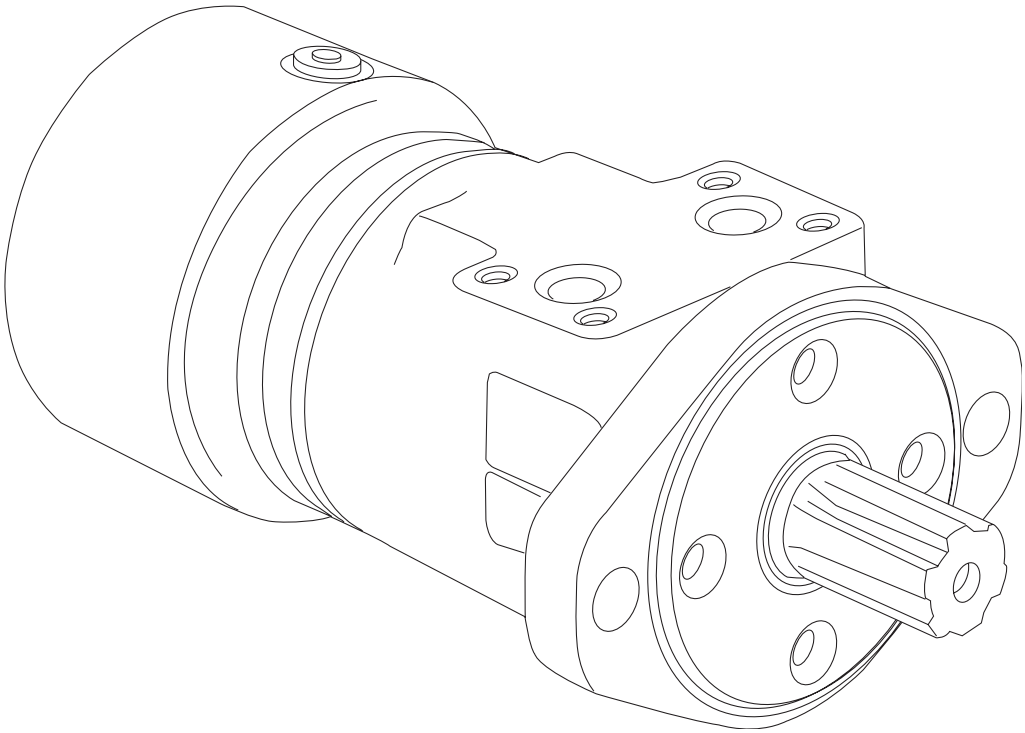

Char-Lynn®

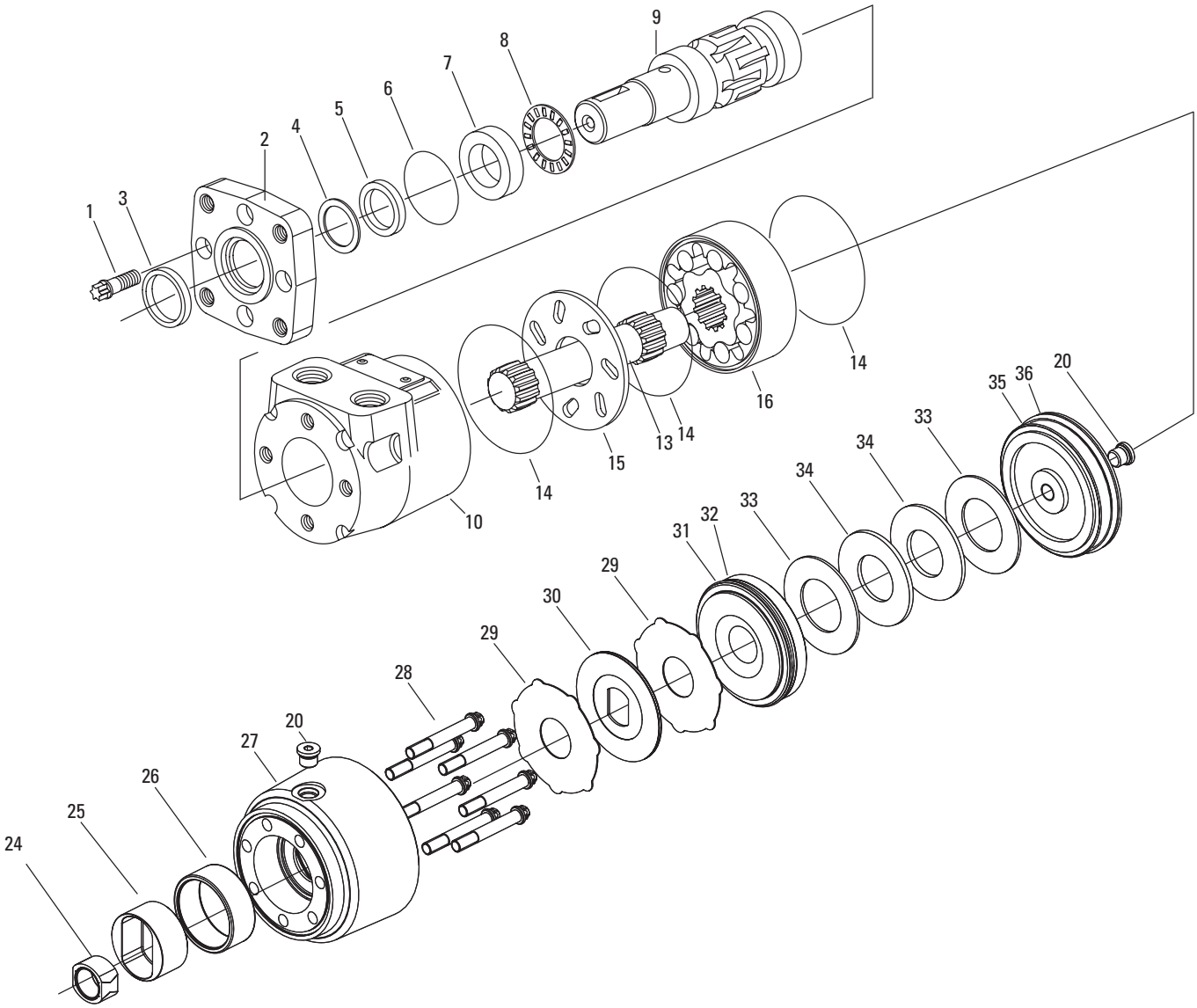

	REFERENCE NUMBER 13		REFERENCE NUMBER 16		REFERENCE NUMBER 28	
Displ. in./r	Drive	Length mm [in.]	Geroler	Width mm [in.]	Cap Screw	Length mm [in.]
36 [2.2]	4993321-010	91,4 [3.60]	22801-001	6,6 [.26]	16294-200	50,8 [2.00]
49 [3.0]	4993321-001	94,0 [3.70]	22801-002	9,9 [.35]	16294-212	53,8 [2.12]
66 [4.0]	4993321-011	97,1 [3.82]	22801-003	11,9 [.47]	16294-225	57,2 [2.25]
80 [4.9]	4993321-002	99,8 [3.93]	22801-004	14,7 [.58]	16294-238	60,5 [2.38]
102 [6.2]	4993321-003	106,4 [4.19]	22801-005	18,5 [.73]	16294-250	63,5 [2.50]
131 [8.0]	4993321-004	109,2 [4.30]	22801-006	23,9 [.94]	16294-275	69,9 [2.75]
157 [9.6]	4993321-005	114,3 [4.50]	22801-007	28,9 [1.14]	16294-288	73,1 [2.88]
195 [11.9]	4993321-006	120,7 [4.76]	22801-008	35,6 [1.40]	16294-312	79,2 [3.12]
244 [14.9]	4993321-007	130,0 [5.12]	22801-009	44,5 [1.75]	16294-350	88,9 [3.50]
306 [18.7]	4993321-008	141,5 [5.57]	22801-010	56,1 [2.21]	16294-400	101,6 [4.00]
370 [22.6]	4993321-009	153.2 [6.03]	22801-011	67,8 [2.67]	16294-425	108,0 [4.25]

	REF. NO.	PART NUMBER	DESCRIPTION	QTY. PER UNIT
	01	16292-088	Screw, Cap (6 Point (E10) Drive 5/16-24 x 7/8)	4
	02	22000-001	Flange Mounting (2 Bolt)	1
		22000-002	Flange Mounting (4 Bolt) 3/8-16 UNC	1
		22000-004	Flange Mounting (2 Bolt SAE B)	1
		22000-005	Flange Mounting (4 Bolt Magneto)	1
		22000-006	Flange Mounting (4 Bolt) M10 x 1,5	1
X	03	9121-002	Seal, Exclusion	1
X	04	22002-000	Washer, Backup	1
X	05	9057-014	Seal, Pressure	1
X	06	9091-001	Seal	1
	07	7462-000	Race, Thrust Bearing	1
	08	7537-000	Bearing, Thrust Needle	1
	09	7360-001	Shaft, Output (1 in. Dia. Straight with Woodruff Key Slot)	1
		7360-002	Shaft, Output (SAE 6B Splined)	1
		7360-007	Shaft, Output (1 in. Dia. Straight with .315 Dia. Crosshole)	1
		7360-008	Shaft, Output (1 in. Dia. Straight with .406 Dia. Crosshole)	1
		7360-016	Shaft, Output (7/8 in. Dia. SAE B 13 T Splined)	1
		7360-017	Shaft, Output (25 mm Dia. Straight)	1
		7360-018	Key, Woodruff (1 in. Dia. Tapered Shaft)	1
		7360-024	Key, Straight (for 7/8 in. Dia. Shaft)	1
		14193-000	Key, Woodruff (for 1” Dia. Shaft)	1
		14391-004	Key, Straight (for 7/8” Dia. Straight Shaft)	1
		14381-000	Nut, (for Tapered Shaft)	1
		14462-006	Key, Straight (for 25 mm Dia. Shaft)	1
	10	201285-001	Housing, 7/8-14 O-ring Ports	1
		201285-003	Housing, Manifold Ports (5/16-18 UNC)	1
		201285-004	Housing, Manifold Ports (M8 x 1.5)	1
		201285-006	Housing, (G 1/2 (BSP))	1
	11	N/A	O-ring	1
	12	N/A	Plug	1
	13	*	Drive	1
X	14	9086-005	Seal	3
	15	22808-000	Plate, spacer	1
	16	*	Geroler	1
	24	114981-002	Collar	1
	25	203002-003	Brake Shaft	1
	26	16341-002	Bearing	1
	27	4997010-001	Housing, Brake (7/16-20 Brake Release Port)	1
		4997010-002	Housing, Brake (G 1/4 Brake Release Port)	1

Note: Seal kits below do not include brake seals.

REF. NO.	PART NUMBER	DESCRIPTION	QTY. PER UNIT
29	4995288-001	Stationary Plate	2
30	203012-001	Pad, Friction S/A	1
31	4995340-001	Piston	1
32	14853-002	Seal, Piston	1
33	4995334-001	Washer	2
34	112726-001	Spring, Belleville	2
35	4997055-001	End Cap	1
36	250002-237	Seal, End Cap	1
20	9072-003	Plug S/A	1
	60564-000	Seal Kit (Buna N) — Contains Parts Indicated by X	
	60565-000	Seal Kit (same as above with one exception - Shaft Seal is Viton®)	
	60566-000	Seal Kit (Viton) — Contains Parts Indicated by X (Part No.s Differ from those Shown)	

How to Order Replacement Parts

Each Order Must Include the Following:

1. Product Number
2. Date Code
3. Part Name
4. Part Number
5. Quantity of Parts

For More Detailed Information Contact Eaton Corp. Hydraulics Division
15151 Highway 5
Eden Prairie, MN 55344

- Specifications and performance data, Catalog No. 11-872
- When servicing Steering Control Unit refer to Repair Information No. 7-308. This repair manual lists tools required, step by step disassembly and reassembly procedures.

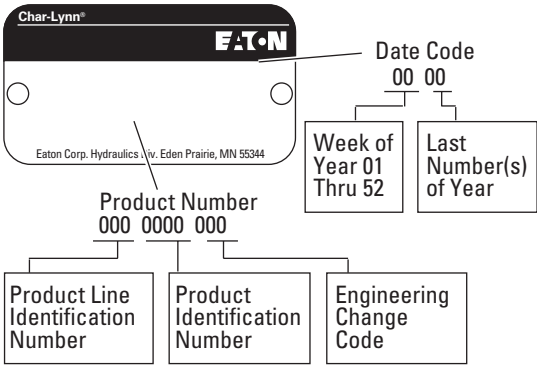

PRODUCT NUMBERS — T-BRAKE SERIES

Add three digit prefix —185-to four digit number from chart for complete product number—Example 185-1068. Orders will not be accepted without three digit prefix.

Mounting	Shaft	Ports	Part# Prefix	3.0	4.0	4.9	6.2	8.0	9.6	11.9	14.9	18.7	22.6
2-Bolt	1" Keyed	7/8-14 O-ring	185-	2000	2001	2002	2003	2004	2005	2006	2007	2008	2009
		Manifold	185-	2010	2011	2012	2013	2014	2015	2016	2017	2018	2019
	6B Splined	7/8-14 O-ring	185-	2020	2021	2022	2023	2024	2025	2026	2027	2028	2029
		Manifold	185-	2030	2031	2032	2033	2034	2035	2036	2037	2038	2039
	13T Splined 16/32 pitch	7/8-14 O-ring	185-	2040	2041	2042	2043	2044	2045	2046	2047	2048	2049
		Manifold	185-	2050	2051	2052	2053	2054	2055	2056	2057	2058	2059
4-Bolt	1" Keyed	7/8-14 O-ring	185-	2060	2061	2062	2063	2064	2065	2066	2067	2068	2069
		Manifold	185-	2070	2071	2072	2073	2074	2075	2076	2077	2078	2079
	6B Splined	7/8-14 O-ring	185-	2080	2081	2082	2083	2084	2085	2086	2087	2088	2089
		Manifold	185-	2090	2091	2092	2093	2094	2095	2096	2097	2098	2099
	13T Splined 16/32 pitch	7/8-14 O-ring	185-	2100	2101	2102	2103	2104	2105	2106	2107	2108	2109
		Manifold	185-	2110	2111	2112	2113	2114	2115	2116	2117	2118	2119
2-Bolt SAE B	1" Keyed	7/8-14 O-ring	185-	2120	2121	2122	2123	2124	2125	2126	2127	2128	2129
		Manifold	185-	2130	2131	2132	2133	2134	2135	2136	2137	2138	2139
	6B Splined	7/8-14 O-ring	185-	2140	2141	2142	2143	2144	2145	2146	2147	2148	2149
		Manifold	185-	2150	2151	2152	2153	2154	2155	2156	2157	2158	2159
	13T Splined 16/32 pitch	7/8-14 O-ring	185-	2160	2161	2162	2163	2164	2165	2166	2167	2168	2169
		Manifold	185-	2170	2171	2172	2173	2174	2175	2176	2177	2178	2179

PRODUCT NUMBERS WITH LOW SPEED VALVING — T-BRAKE SERIES

Mounting	Shaft	Ports	Part# Prefix	3.0	4.0	4.9	6.2	8.0	9.6	11.9	14.9	18.7	22.6
2-Bolt	1" Keyed	7/8-14 O-ring	185-	2180	2181	2182	2183	2184	2185	2186	2187	2188	2189
		Manifold	185-	2190	2191	2192	2193	2194	2195	2196	2197	2198	2199
	6B Splined	7/8-14 O-ring	185-	2200	2201	2202	2203	2204	2205	2206	2207	2208	2209
		Manifold	185-	2210	2211	2212	2213	2214	2215	2216	2217	2218	2219
	13T Splined 16/32 pitch	7/8-14 O-ring	185-	2220	2221	2222	2223	2224	2225	2226	2227	2228	2229
		Manifold	185-	2230	2231	2232	2233	2234	2235	2236	2237	2238	223
4-Bolt	1" Keyed	7/8-14 O-ring	185-	2240	2241	2242	2243	2244	2245	2246	2247	2248	2249
		Manifold	185-	2250	2251	2252	2253	2254	2255	2256	2257	2258	2259
	6B Splined	7/8-14 O-ring	185-	2260	2261	2262	2263	2264	2265	2266	2267	2268	2269
		Manifold	185-	2270	2271	2272	2273	2274	2275	2276	2277	2278	2279
	13T Splined 16/32 pitch	7/8-14 O-ring	185-	2280	2281	2282	2283	2284	2285	2286	2287	2288	2289
		Manifold	185-	2290	2291	2292	2293	2294	2295	2296	2297	2298	2299
2-Bolt SAE B	1" Keyed	7/8-14 O-ring	185-	2300	2301	2302	2303	2304	2305	2306	2307	2308	2309
		Manifold	185-	2310	2311	2312	2313	2314	2315	2316	2317	2318	2319
	6B Splined	7/8-14 O-ring	185-	2320	2321	2322	2323	2324	2325	2326	2327	2328	2329
		Manifold	185-	2330	2331	2332	2333	2334	2335	2336	2337	2338	2339
	13T Splined 16/32 pitch	7/8-14 O-ring	185-	2340	2341	2342	2343	2344	2345	2346	2347	2348	2349
		Manifold	185-	2350	2351	2352	2353	2354	2355	2356	2357	2358	2359

These motors with the low speed valving option provide very low speed while maintaining high torque.

Designed to run continuously at up to 200 RPM at standard rated pressures and reduced flows, provide exceptionally smooth operation at low speeds.

Motors with this valving are not intended for low pressure applications (41 Bar [600 PSI] Minimum). Shaft side / radial load ratings are not affected by this valving.

Notes

Notes

Eaton
14615 Lone Oak Road
Eden Prairie, MN 55344
USA
Tel: 952 937-9800
Fax: 952 974-7722
www.hydraulics.eaton.com

Eaton
20 Rosamond Road
Footscray
Victoria 3011
Australia
Tel: (61) 3 9319 8222
Fax: (61) 3 9318 5714

Eaton
Dr.-Reckeweg-Str. 1
D-76532 Baden-Baden,
Germany
Tel: +49 (0) 7221 682-0
Fax: +49 (0) 7221 682-788

EATON | Char-Lynn

© 2004 Eaton Corporation
All rights reserved
Printed in USA
Document No. C-MOLO-TP003-E
January 2004