Char-Lynn®

Spool Valve Hydraulic Motors

Repair Information

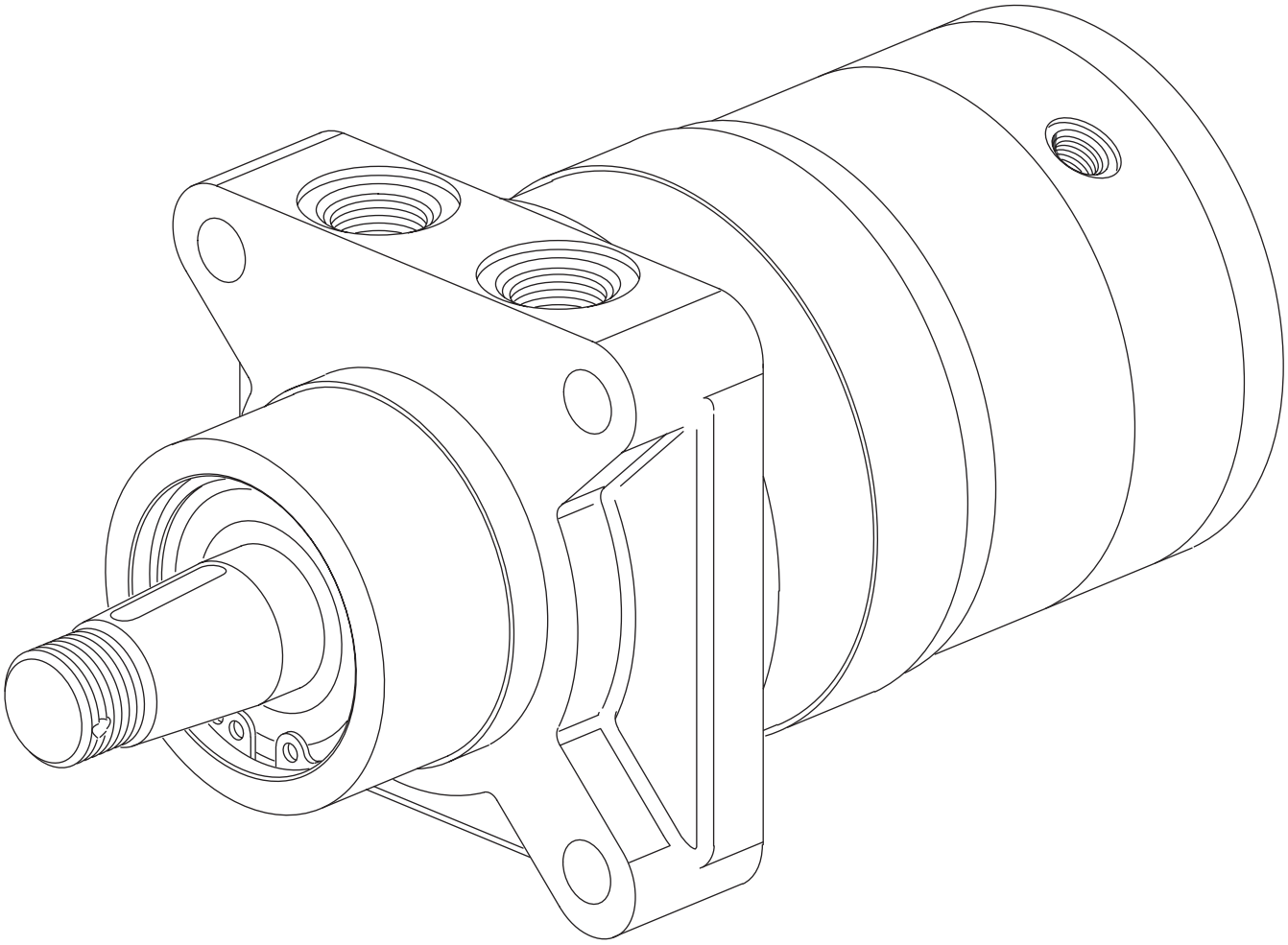

W Series Geroler® Motors with Parking Brake

004

W Series with Parking Brake

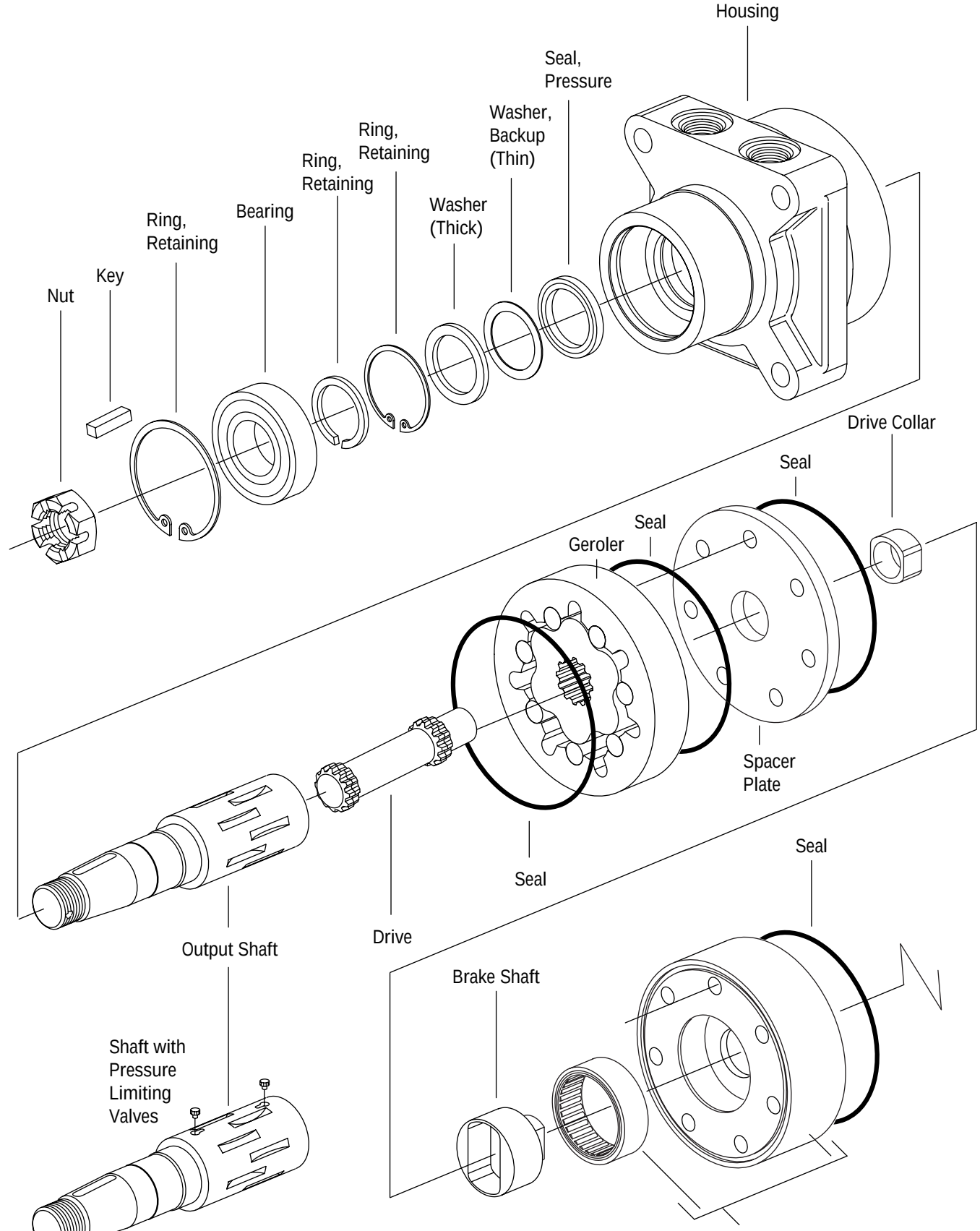

Do Not Remove this Bearing from Brake Shaft Housing S/A (Ref. No. 24)

W Series with Parking Brake

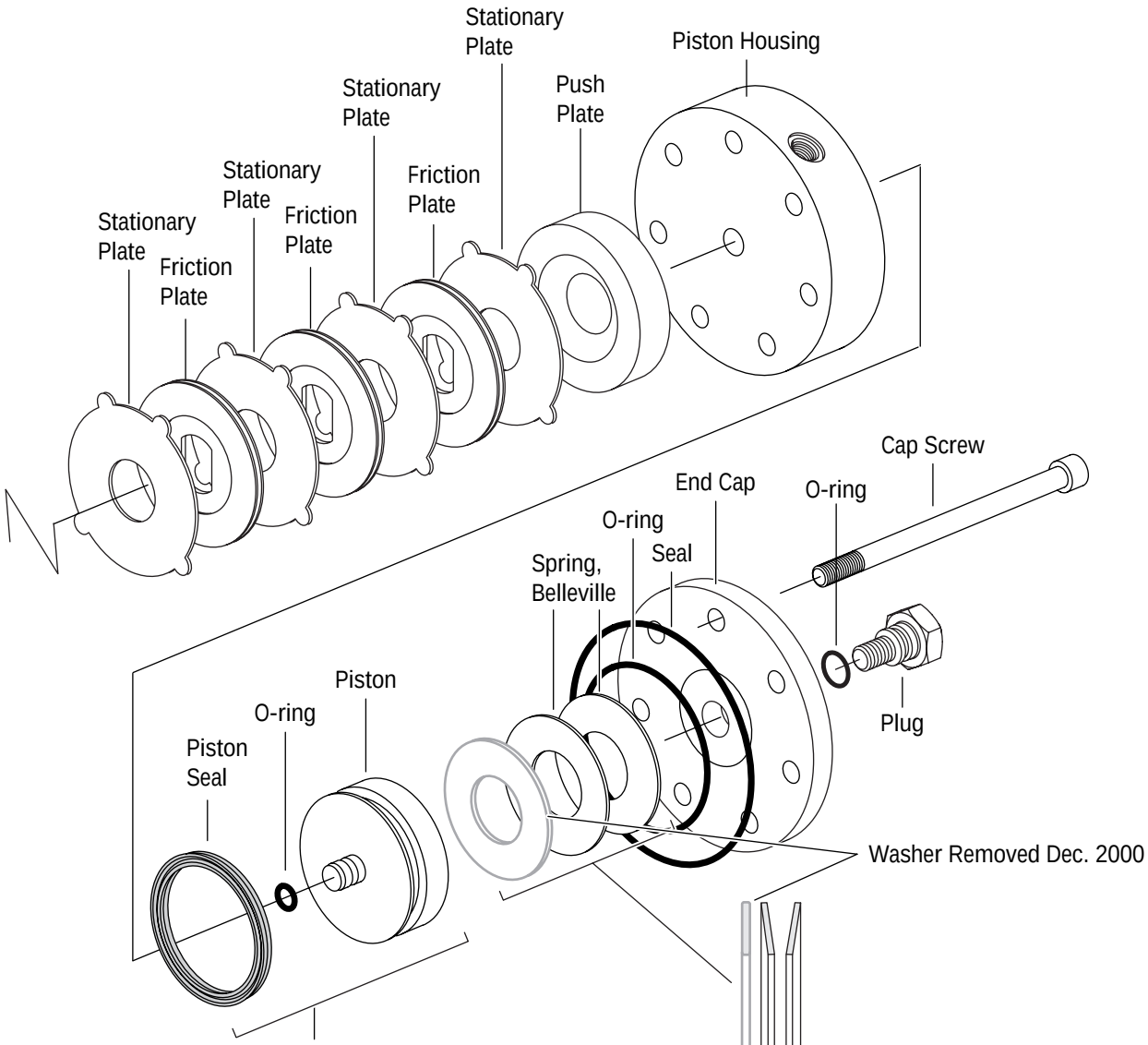

Note: Special Tool is required for Piston/Housing Installation — Tool. No. 600705)

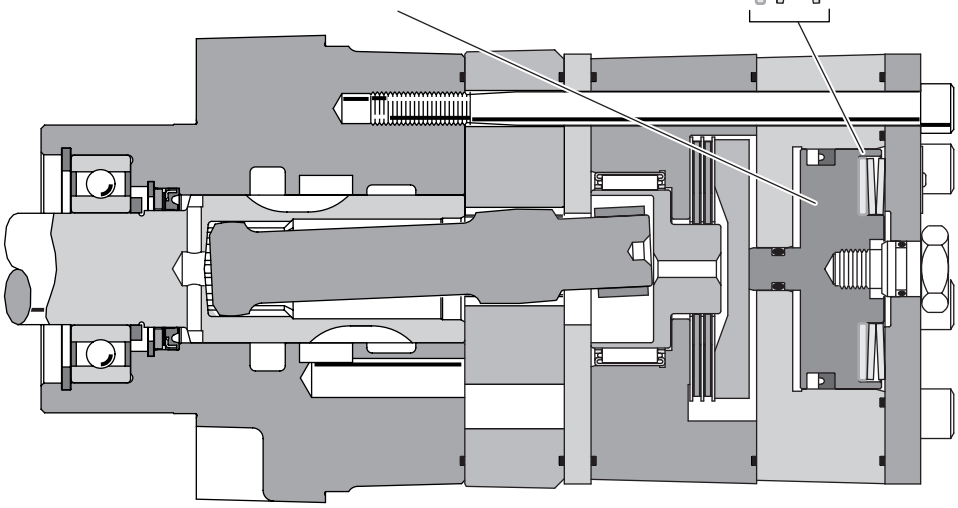

W Series with Parking Brake

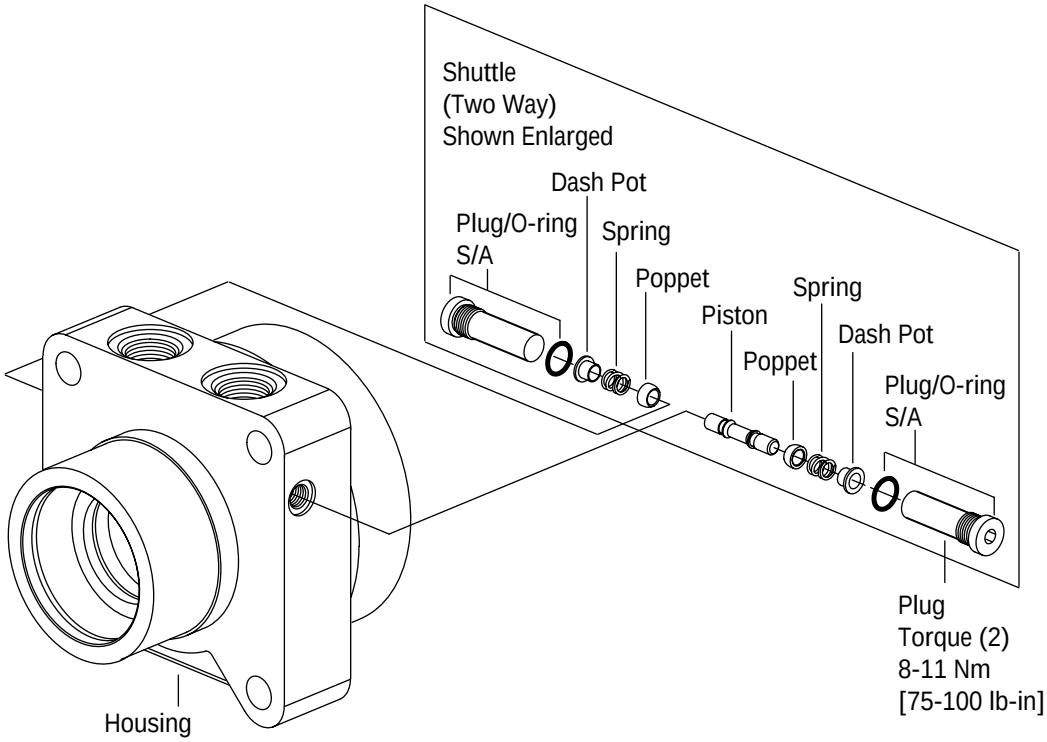

Disassembly

1 Cleanliness is extremely important when repairing hydraulic motors. Work in a clean area. Before disconnecting the hydraulic motor thoroughly clean the exterior. Remove motor from application before disassembly; drain the oil from the motor.

Required Tools

- 5/16 inch Hex Key
- Bullet for Shaft Seal Installation - Eaton Tool No. 600633
- Bearing Removal Tool - Eaton Tool No. 600636
- Bearing Installation Tool - Eaton Tool No. 600637
- Torque wrench - 68 Nm [600 lb-ft] capacity
- Seal Press Tool - Eaton Tool No. 600642
- Piston/Seal Installation Tool - Eaton Tool No. 600705

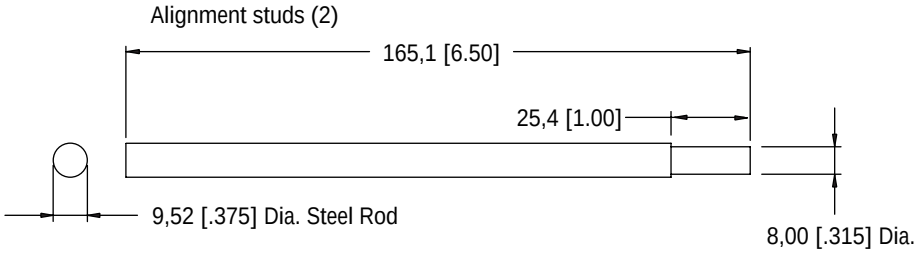

W Series with Parking Brake

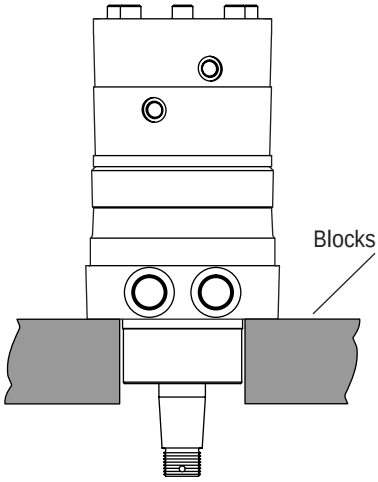

2 For disassembly and reassembly position motor vertically on blocks or in a bench hole.

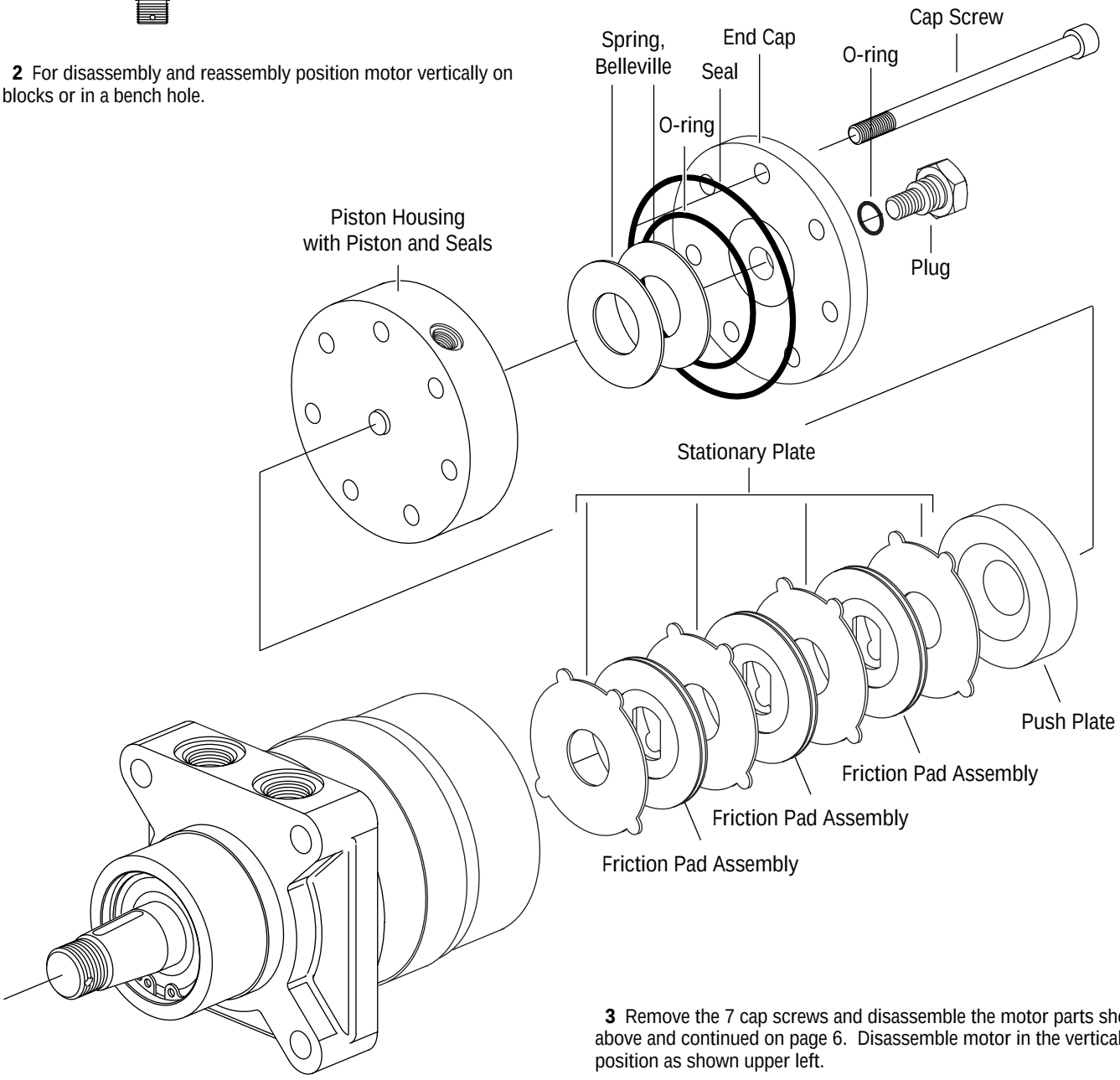

3 Remove the 7 cap screws and disassemble the motor parts shown above and continued on page 6. Disassemble motor in the vertical position as shown upper left.

W Series with Parking Brake

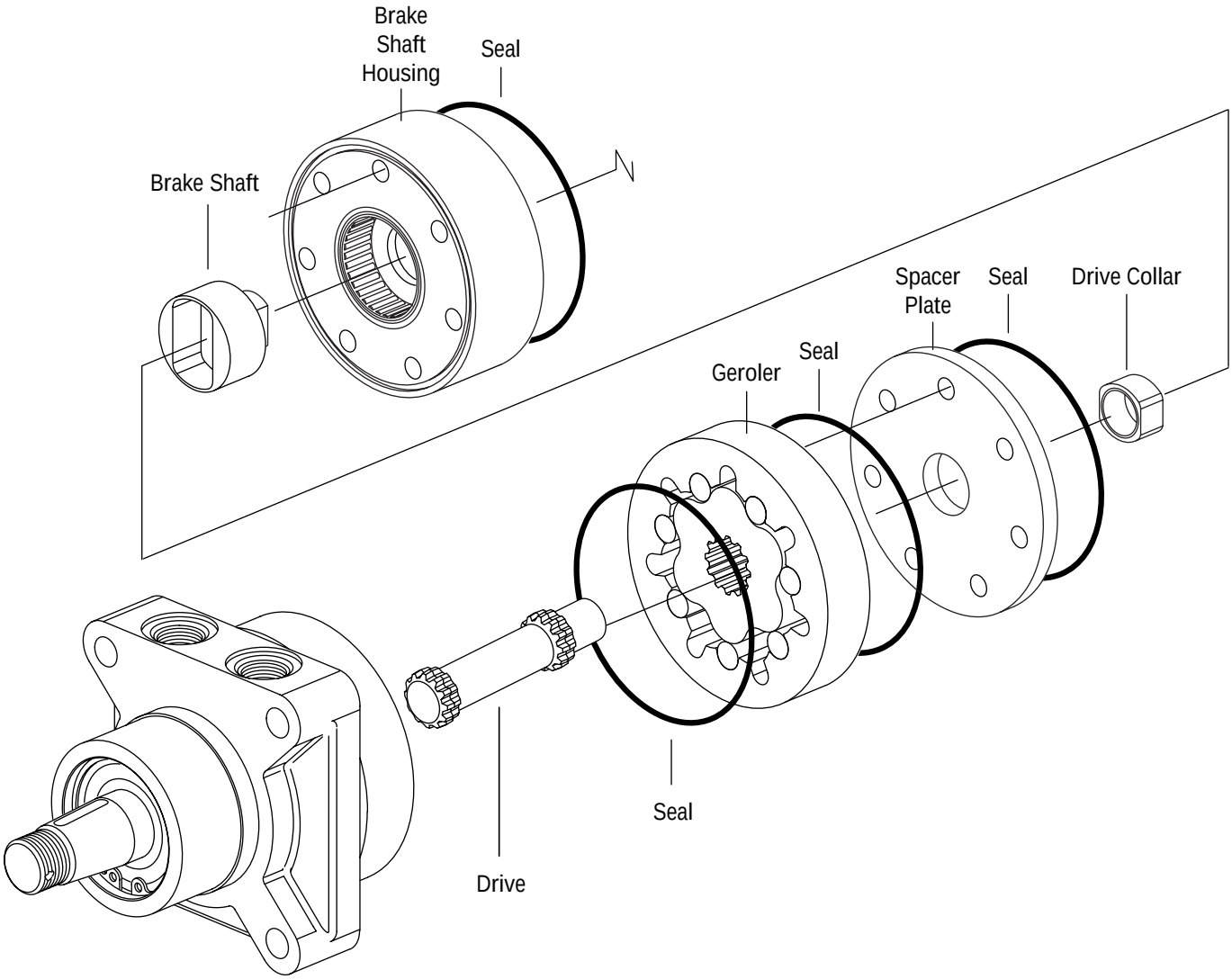

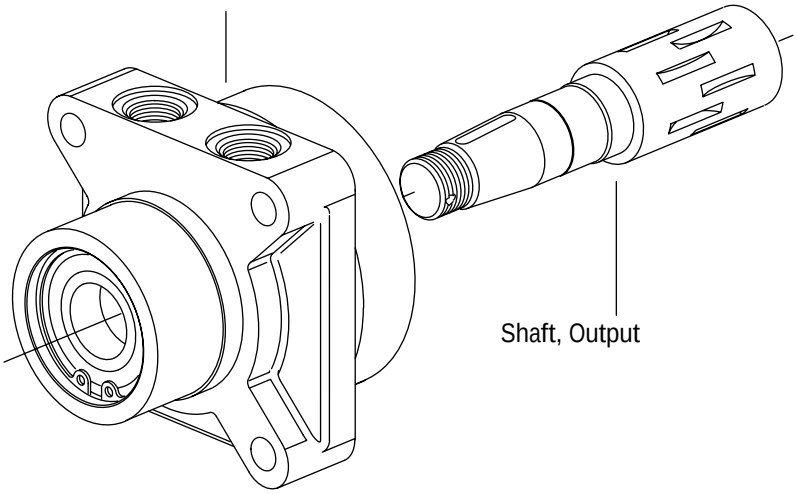

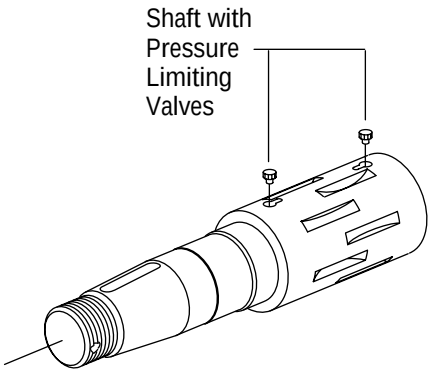

W Series with Parking Brake

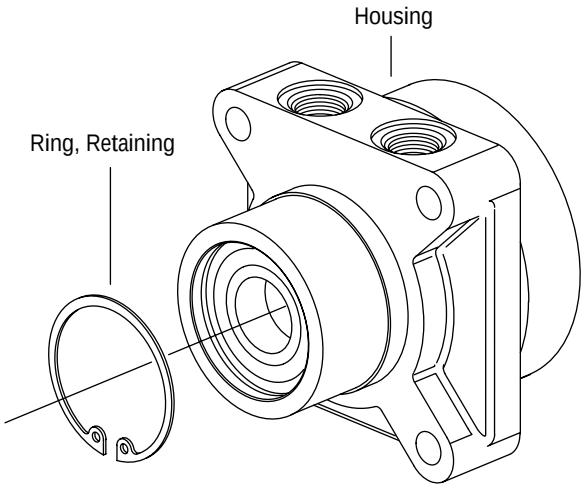

4 Remove retaining ring from front of housing (motor disassembly at this point no longer in vertical position).

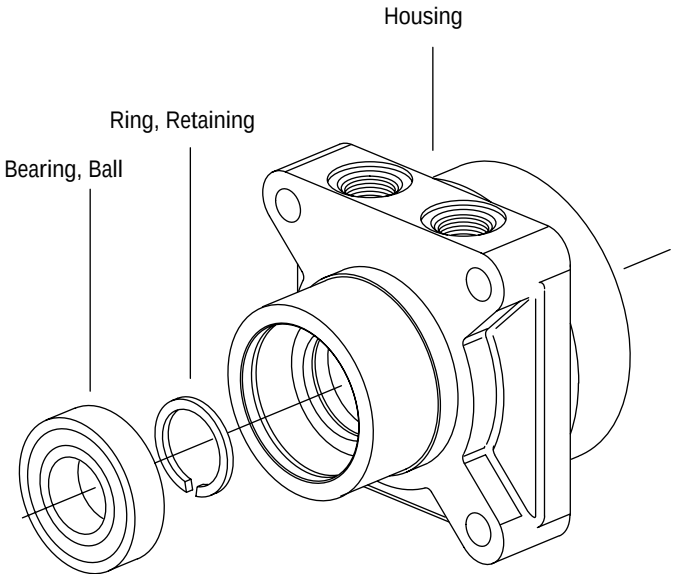

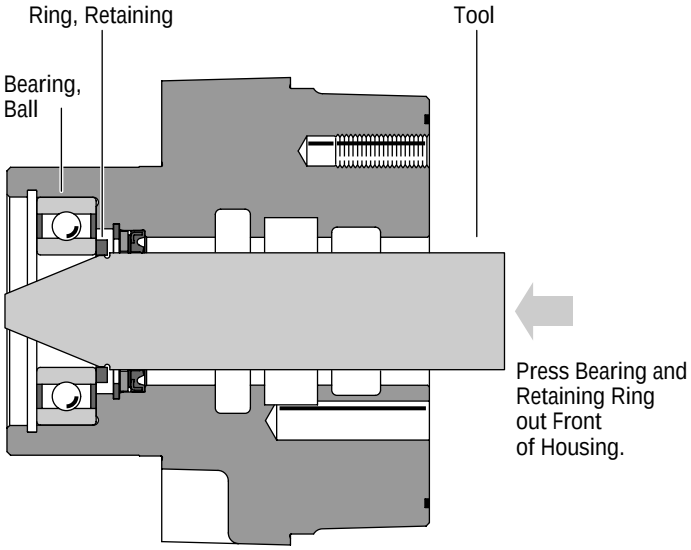

5 Remove bearing and retaining ring with special tool; insert tool cone end first and drive these two parts out from back side of housing. Seal will be damaged when tool is inserted and must be replaced upon reassembly.

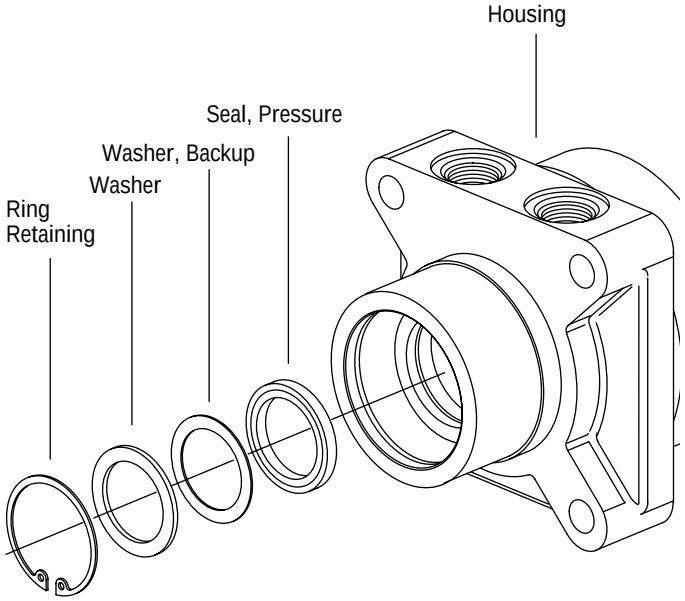

6 Remove retaining ring, washer, backup washer and pressure seal from housing.

7 Check all mating surfaces. To reduce the chance of leakage, replace any parts that have scratches or burrs. Wash all metal parts in clean solvent. Blow them dry with pressurized air. Do not wipe parts dry with paper towels or cloth. Lint in a hydraulic system will cause damage.

W Series with Parking Brake

Reassembly

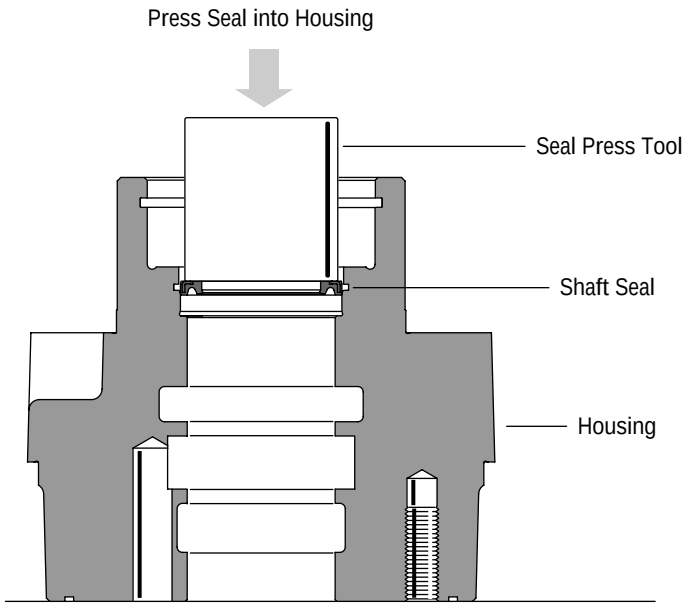

8 Position housing in the vertical position on a clean smooth surface, lubricate pressure seal with petroleum jelly and insert in housing, seal lip in the down position. Use seal press tool No. 600642 and press seal into position in housing.

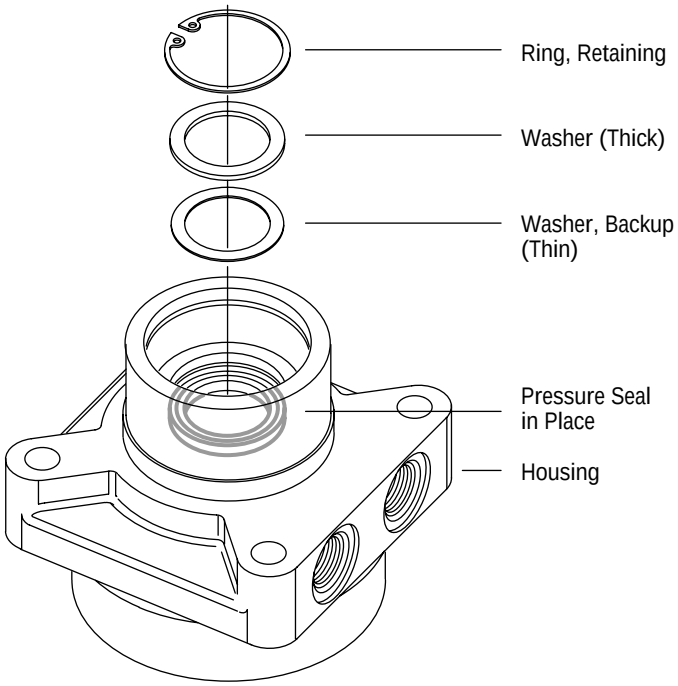

9 Place backup washer, washer, and retaining ring on top of pressure seal. Make sure retaining ring is fully engaged in groove in housing.

W Series with Parking Brake

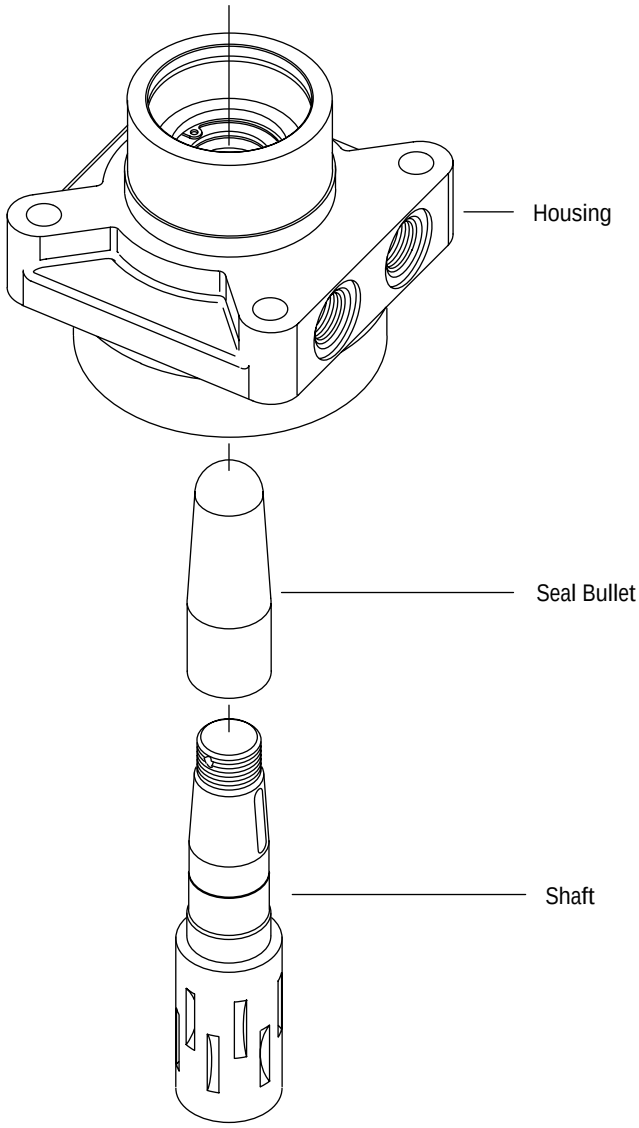

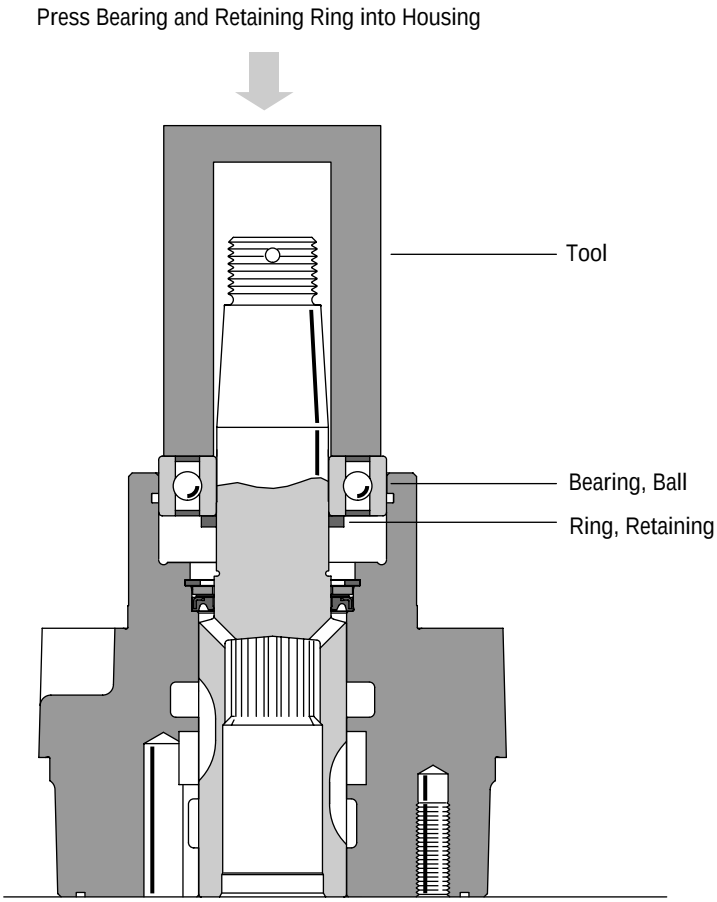

10 Place seal bullet over shaft. With bullet and shaft seal surface lubricated with petroleum jelly, place shaft on a clean smooth hard surface, output end of shaft up. Position housing over shaft and carefully lower housing over bullet and shaft.

11 Remove bullet from shaft end and place retaining ring and bearing on shaft, along with bearing driver tool. Press these parts into housing.

IMPORTANT NOTE: When handling motor assembly without bearing installed, extra care should be taken to make sure that the back end of the Output Shaft <u>always</u> stays flush with the back end of housing surface. If Output Shaft moves, in either direction, more than 0,79mm [1/32 in.], Output Shaft should be removed from the housing so that the Seal may be inspected for cuts. If necessary, replace Seal per steps 8 and 9, and then reinstall Output Shaft per step 10.

W Series with Parking Brake

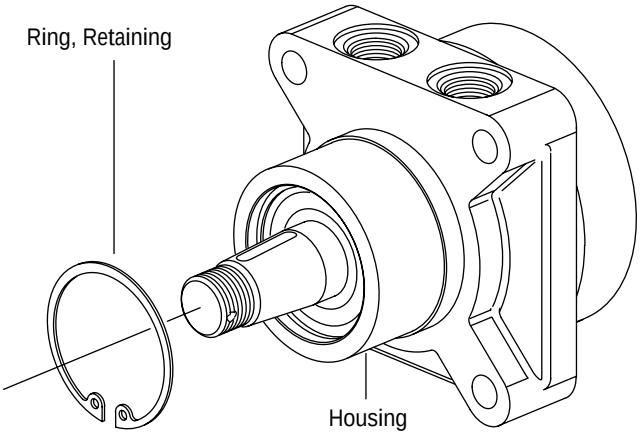

12 Install retaining ring, making sure retaining ring is fully engaged in ring groove in housing.

13 Reposition housing shaft end down. The illustrations have been created from the master parts drawing and are for part reference only.

Important Note: If the shaft is not flush or slightly below Geroler mounting surface, place drive in open end of the shaft and through spline. Strike drive with a soft hammer. Shaft end should be in a hole on the bench so it is free to move forward, the housing only should be supported.

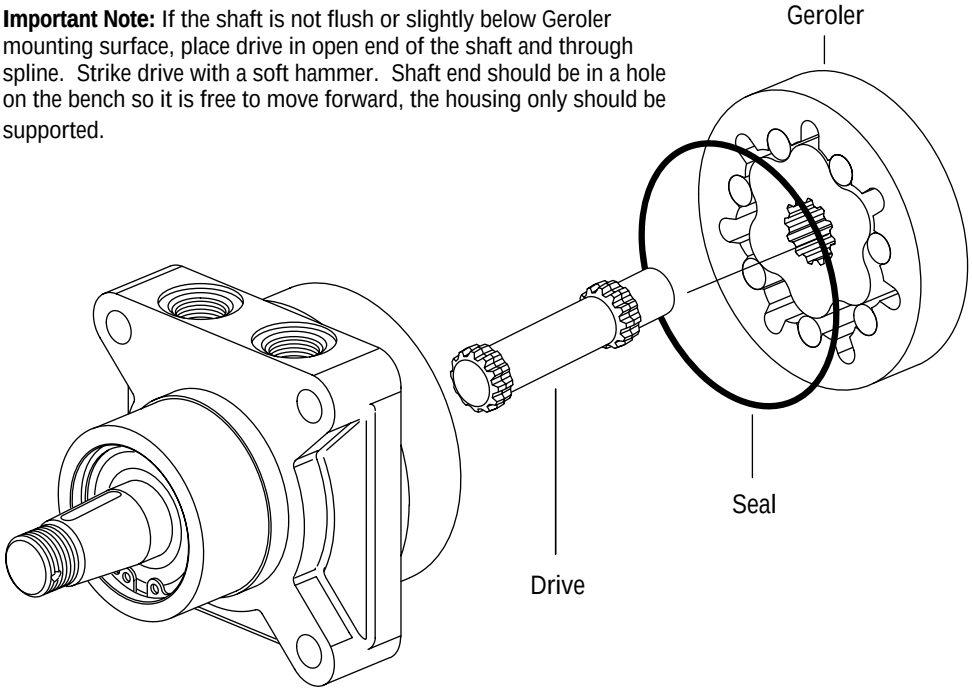

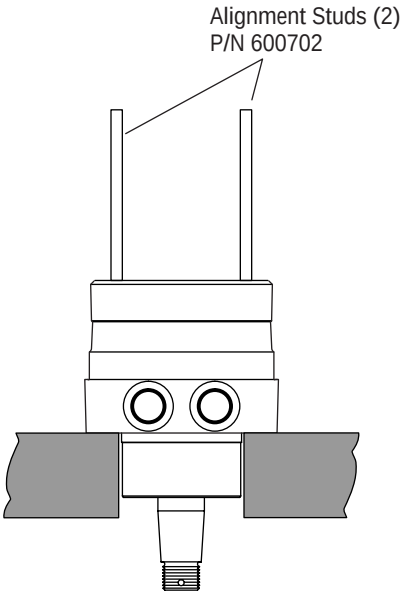

14 Install seal in seal groove of housing.

15 Place drive in shaft, engage spline. Mark drive using mark on shaft as a reference point. Timing procedure is shown on page 13.

16 Place Geroler over drive (seal groove up), star point or star star valley aligned with mark on drive per your rotation preference.

17 Align bolt holes on Geroler with housing holes. Install two alignment studs* into bolt holes one on each side of valve housing.

*** Note:** Alignment studs are recommended for reassembly, studs will assist in the alignment of remaining parts.

W Series with Parking Brake

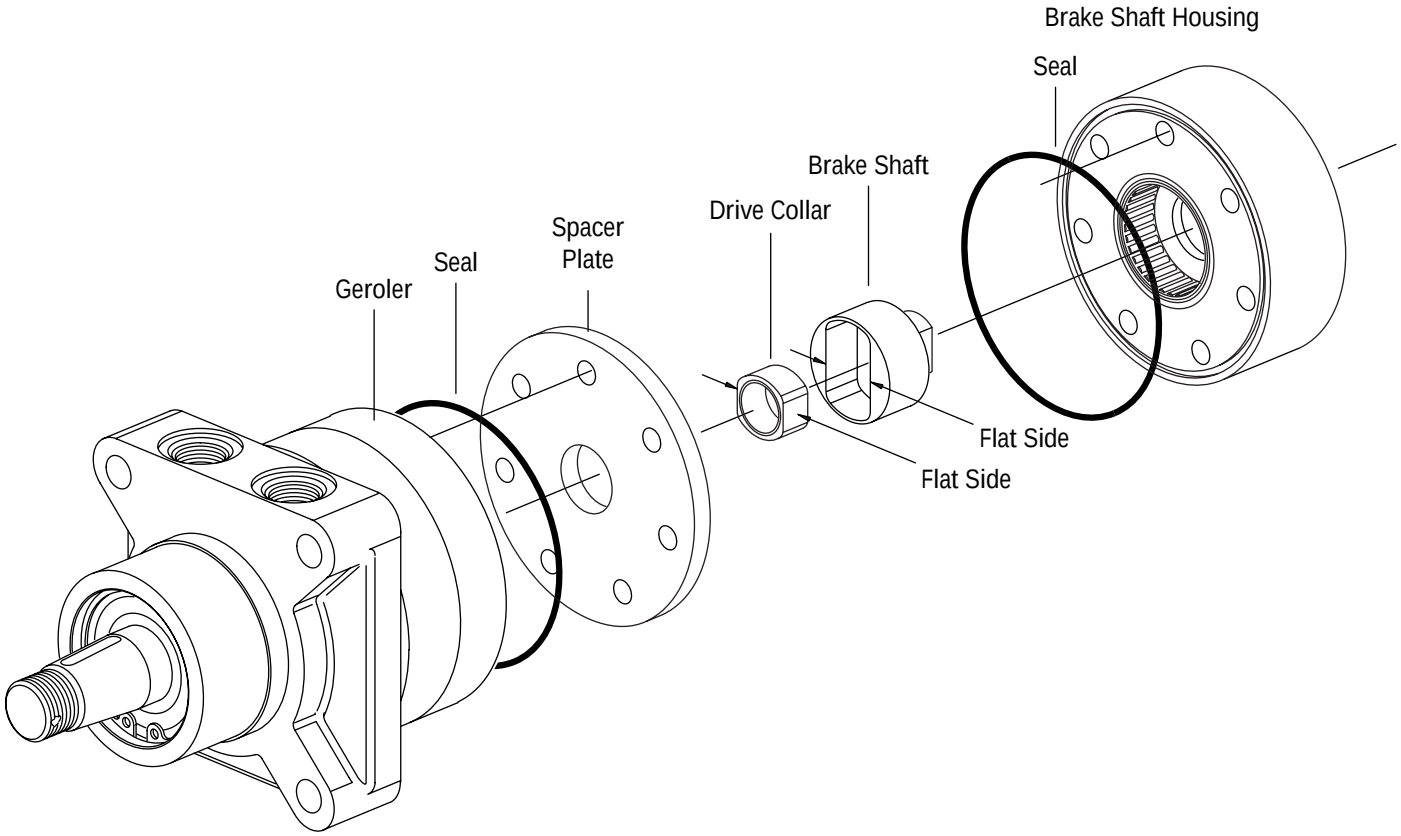

18 Install seal in seal groove of Geroler.

19 Install spacer plate on Geroler.

20 Place drive collar over the drive extension. The collar should slide over the extension smoothly and turn freely on the extension.

21 Place the brake shaft over the drive collar, **align the flat sides of the collar with the flat sides of the inner form on the brake shaft.** The brake shaft should lay flat against the spacer plate.

22 Install seal into brake shaft housing seal groove (needle bearing bore side).

23 Align the brake release port (in the brake shaft housing) with the main flow ports in the valve housing; all three ports should be in the same plane, then slide brake shaft housing down alignment studs onto spacer plate.

Note: The OD of the brake shaft should slide into the needle bearing smoothly. Check to see that the drive collar/brake shaft interface was assembled properly, twist the brake shaft back and forth, there should be very little play—if the brake shaft can be turned back and forth and seems to be a sloppy fit, reassemble parts (steps 20-23).

W Series with Parking Brake

24 Install one stationary plate into the brake shaft housing. Place one friction disk over the brake shaft onto the stationary plate. Follow this with one more stationary plate, another friction disk, and then a final stationary plate (3 stationary plates and 2 friction disks total).

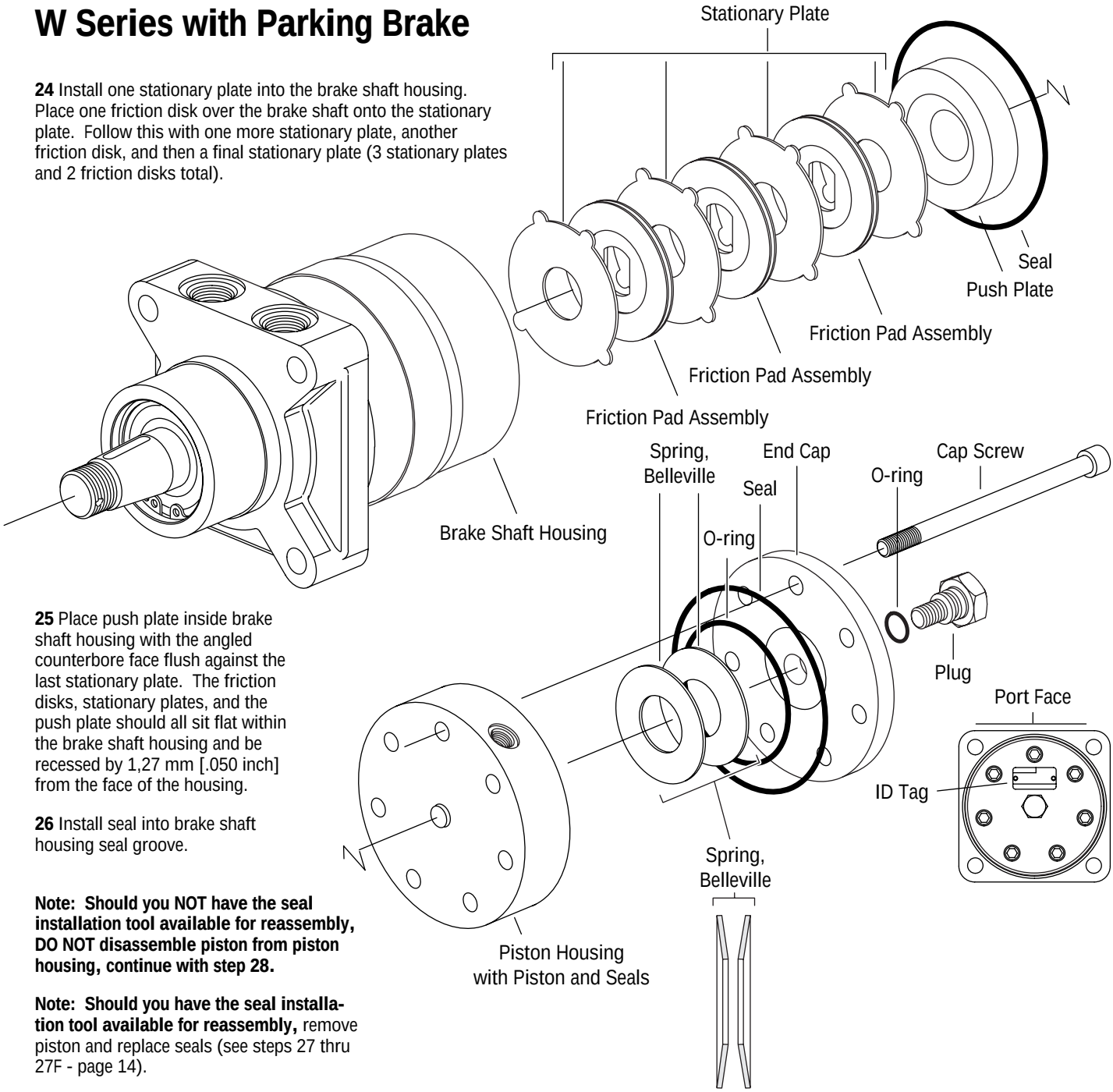

25 Place push plate inside brake shaft housing with the angled counterbore face flush against the last stationary plate. The friction disks, stationary plates, and the push plate should all sit flat within the brake shaft housing and be recessed by 1,27 mm [.050 inch] from the face of the housing.

26 Install seal into brake shaft housing seal groove.

Note: Should you NOT have the seal installation tool available for reassembly, DO NOT disassemble piston from piston housing, continue with step 28.

Note: Should you have the seal installation tool available for reassembly, remove piston and replace seals (see steps 27 thru 27F - page 14).

28 Rotate piston housing so that the face with the small diameter thru hole faces the brake shalt housing. Place the piston housing on the brake shaft housing and align the 3,17 [.125] dia. angled hole with the 3,17 [.125] dia. straight hole coming out of the brake shalt housing.

29 Place the washer (eliminated early year 2000 - page 3 shows early version) into the counterbore in the piston. The washer should lay flat.

30 Place one spring (belleville) into the piston counterbore, the OD of the belleville washer should touch the washer. Place a second spring (belleville) into the piston counterbore with its ID touching the ID of the first belleville washer.

31 Install both seals into the two grooves in the piston housing.

32 Place the end cap onto the piston housing with the counterbore surface facing the piston housing, also check to see if the top of the identification tag is parallel with the main port face.

33 Dip cap screw threads in clean hydraulic oil prior to assembly.

34 Insert and finger tighten 5 of the 7 cap screws through; the end cap, piston housing, brake shaft housing, spacer plate and then into the threaded housing. Remove alignment studs (2) and replace each with remaining cap screws.

Note: Cap screws have a sealant under the head.

35 Pre-torque screws (in a crisscross pattern) to 34 Nm [300 lb-in], re-torque (in a crisscross pattern) to 48,1 - 53,7 Nm [425-475 lb-in].

W Series with Parking Brake

Motor Timing

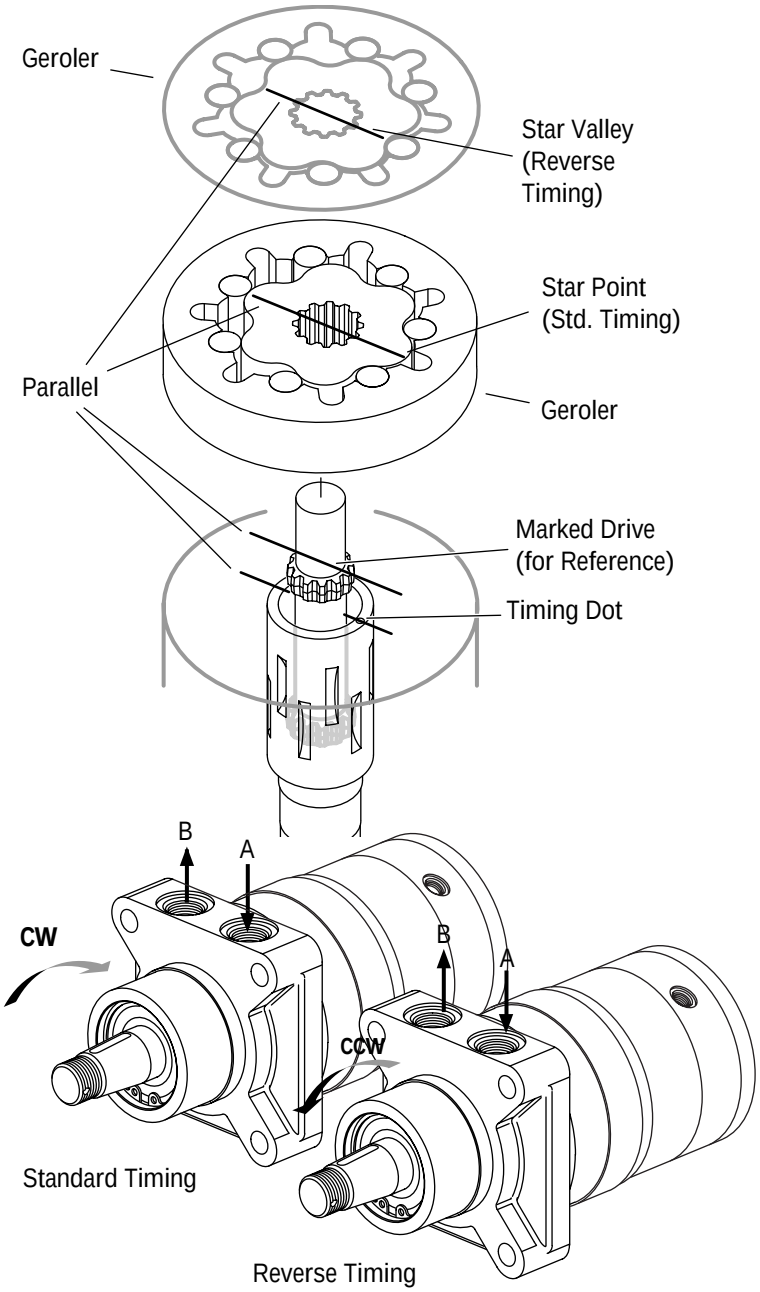

W Series with Parking Brake

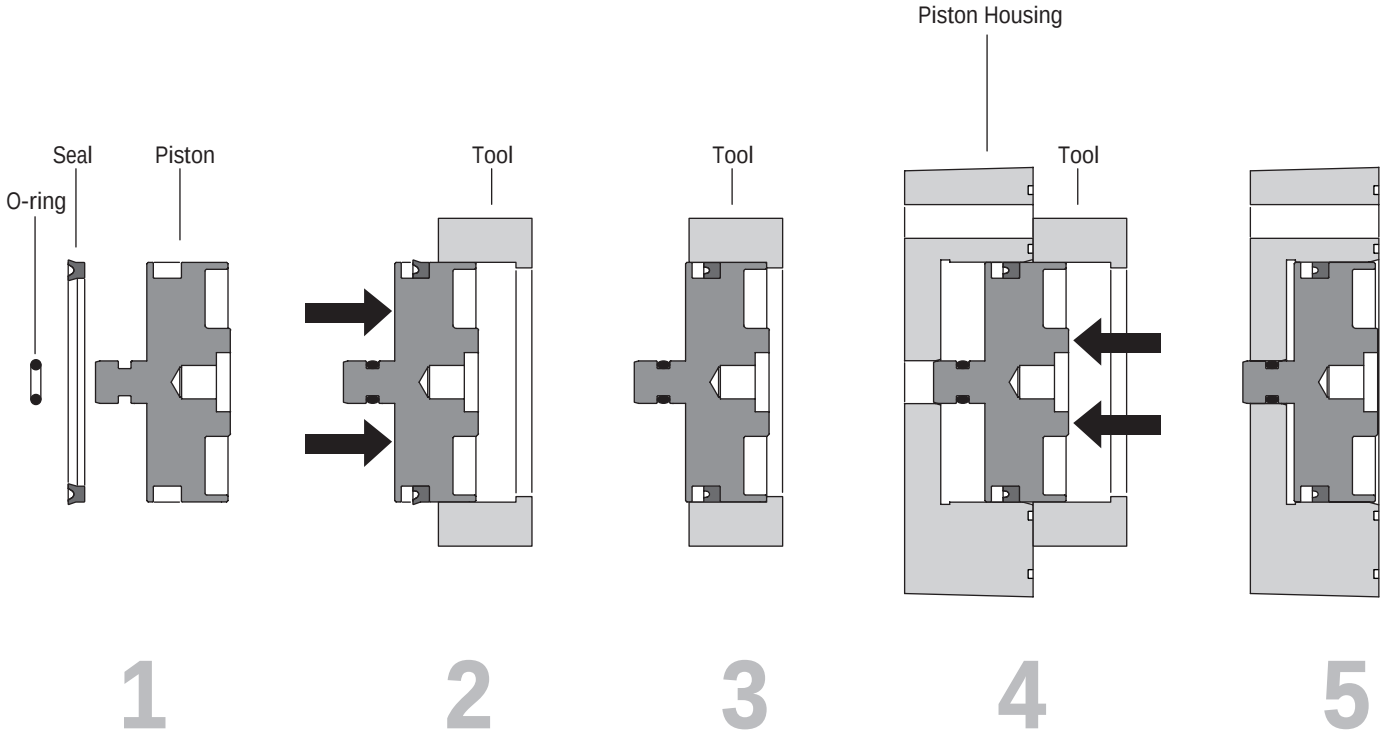

Installation of piston seals

27 Evenly apply 0.1 to 0.15 cc seal lubricant to large U-cup piston seal.

27A Carefully stretch U-cup piston seal over the piston and into the large groove on the piston. The groove in the piston seal (which makes that seal cross section look like a U) should be aligned toward the small piston diameter (actuator end) of the piston. Verify that the U-cup is not twisted in the groove (assembly procedure 1 above).

27B Evenly apply 0.1 to 0.15 cc seal lubricant to small o-ring.

27C Carefully stretch o-ring over the small piston diameter and into the small groove on the piston. Verify that o-ring in not twisted in the groove.

27D Press piston with seals into piston assembly tool No. 600705 (assembly procedure 2 and 3 above).

27E Place tool with piston and seals onto piston housing and using the your hand, a soft mallet, or a press; push the piston into the piston housing until it is recessed in the housing.

27F Rotate piston housing so that the face with the small diameter thru hole faces the brake shalt housing. Place the piston housing on the brake shaft housing and align the 3,17 [.125] dia. angled hole with the 3,17 [.125] dia. straight hole coming out of the brake shalt housing.

W Series with Parking Brake

Notes:

W Series with Parking Brake

How to Order Replacement Parts

Each Order Must Include the Following:

1. Product Number
2. Date Code
3. Part Name
4. Part Number
5. Quantity of Parts

For More Detailed Information Contact Eaton Hydraulics 14615 Lone Oak Road Eden Prairie, MN 55344.

- Specifications and performance data, Brochure 10-01-109
- Replacement part numbers and kit information — Parts Information 06-01-165.

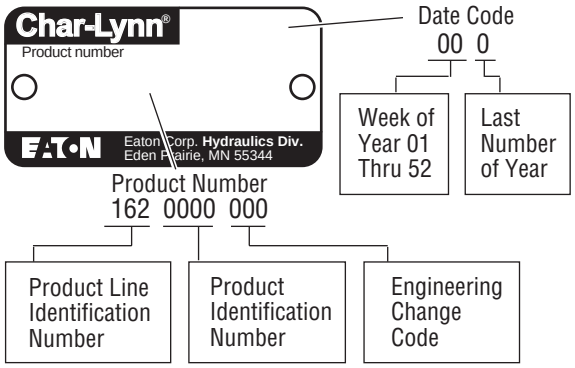

Eaton
Fluid Power Group
Hydraulics Business USA
14615 Lone Oak Road
Eden Prairie, MN 55344
USA
Tel: 952-937-9800
Fax: 952-294-7722
www.eaton.com/hydraulics

Eaton
Fluid Power Group
Hydraulics Business Europe
Route de la Longeraie 7
1110 Morges
Switzerland
Tel: +41 (0) 21 811 4600
Fax: +41 (0) 21 811 4601

Eaton
Fluid Power Group
Hydraulics Business Asia Pacific
11th Floor Hong Kong New World Tower
300 Huaihai Zhong Road
Shanghai 200021
China
Tel: 86-21-6387-9988
Fax: 86-21-6335-3912

Powering Business Worldwide

© 2008 Eaton Corporation
All Rights Reserved
Printed in USA
Document No. C-MOLO-TS028-E
Supersedes 07-01-158
December 2008